TOSOT
WWW.TOSOTCOMFORT.COM

SPLIT TYPE SUBMITTAL

MODEL: TM30D6MO

System Performance		Outdoor Unit
Cooling Temperature Range	°F	-22 – 118
Heating Temperature Range	°F	-22 – 75
Refrigerant Type		R32
Compressor Type		GREE G-10 / 2 – STAGE INVERTER
Sound Pressure Level	dB(A)	62
External Dimensions (W x H x D)	in	40-10/64 × 32-33/64 × 16-52/64
Package Dimensions (W x H x D)	in	43-1/32 × 34-27/32 × 19-9/16
Net Weight	lbs	145.5
Gross Weight	lbs	161.0
Refrigerating Piping		
Additional Charge	oz/ft	0.2
Port A Size (Liquid – Gas)	in	1/4 – 3/8
Port B Size (Liquid – Gas)	in	1/4 – 3/8
Port C Size (Liquid – Gas)	in	1/4 – 3/8
Port D Size (Liquid – Gas)	in	1/4 – 3/8
Port E Size (Liquid – Gas)	in	
Pipe-Charge Length	ft	131
Pipe Length (Min – Max)	ft	10 – 263
Pipe Length to Furthest Indoor Unit	ft	82
Max Pipe Elevation	ft	82
Electrical		
Power Supply		208-230V / 1Ph / 60Hz
Voltage Range (Min – Max)	VAC	187 – 253
Rated Current – Cooling	A	20
Rated Current – Heating	A	21.7
MOCP	A	35
Suggested Breaker Size	A	25
Main Power Wire Size	AWG	Per Local Code
Interconnecting Wire Size	AWG	14/4

TOSOT
WWW.TOSOTCOMFORT.COM

System Features	
Inverter Type	G10
Ultra Low Frequency Torque Control	Yes
Power Factor Correction	Yes
Compressor Type – Inverter	High Efficiency Rotary
Basepan with Electric Heater	Yes
Indoor & Outdoor Fin Coating (Blue Fin)	Yes
Intelligent Defrosting	Yes
Intelligent Preheating	Yes
Low Voltage Startup	Yes
Memory/Power Failure Recovery	Yes
Self Diagnosis	Yes

System Performance		Non-Ducted Indoor Units
Cooling (Min – Max)	Btu/h	8,190 – 34,100
Cooling Capacity @95˚F	Btu/h	28,400
Heating (Min – Max)	Btu/h	8,190 – 40,900
Heating Capacity @47˚F	Btu/h	30,000
Heating Capacity @17˚F	Btu/h	28,000
Heating Capacity Max @5˚F	Btu/h	27,000
SEER2		21
EER2		13.6
HSPF2		10.0
COP @5˚F		2.07
COP @47˚F		4.19

System Performance		Ducted Indoor Units
Cooling (Min – Max)	Btu/h	8,190 – 34,100
Cooling Capacity @95˚F	Btu/h	28,400
Heating (Min – Max)	Btu/h	8,190 – 40,900
Heating Capacity @47˚F	Btu/h	30,000
Heating Capacity @17˚F	Btu/h	27,200
Heating Capacity Max @5˚F	Btu/h	26,000
SEER2		18.0
EER2		12.0
HSPF2		8.0
COP @5˚F		1.88

System Performance		Mixed Ducted and Non-Ducted Indoor Units
Cooling (Min – Max)	Btu/h	8,190 – 34,100
Cooling Capacity @95˚F	Btu/h	28,400
Heating (Min – Max)	Btu/h	8,190 – 40,900
Heating Capacity @47˚F	Btu/h	30,000
Heating Capacity @17˚F	Btu/h	27,600
Heating Capacity Max @5˚F	Btu/h	26,400
SEER2		19.0
EER2		12.2
HSPF2		9.0
COP @5˚F		1.8

Model Number	POSSIBLE COMBINATIONS	COOLING CAPACITY (Btu/h)					HEATING CAPACITY (Btu/h)				
		ZONE1	ZONE2	ZONE3	ZONE4	ZONE5	ZONE1	ZONE2	ZONE3	ZONE4	ZONE5
TM30D6MO	9K+9K	9,000	9,000				9,000	9,000			
TM30D6MO	9K+12K	9,000	12,000				9,000	12,000			
TM30D6MO	9K+18K	9,000	18,000				9,000	18,000			
TM30D6MO	9K+24K	7,745	20,655				8,182	21,818			
TM30D6MO	12K+12K	12,000	12,000				12,000	12,000			
TM30D6MO	12K+18K	11,360	17,040				12,000	18,000			
TM30D6MO	12K+24K	9,467	18,933				10,000	20,000			
TM30D6MO	18K+18K	14,200	14,200				15,000	15,000			
TM30D6MO	18K+24K	12,171	16,229				12,857	17,143			
TM30D6MO	9K+9K+9K	9,000	9,000	9,000			9,000	9,000	9,000		
TM30D6MO	9K+9K+12K	8,520	8,520	11,360			9,000	9,000	12,000		
TM30D6MO	9K+9K+18K	7,100	7,100	14,200			7,500	7,500	15,000		
TM30D6MO	9K+9K+24K	6,086	6,086	16,229			6,429	6,429	17,143		
TM30D6MO	9K+12K+12K	7,745	10,327	10,327			8,182	10,909	10,909		
TM30D6MO	9K+12K+18K	6,554	8,738	13,108			6,923	9,231	13,846		
TM30D6MO	9K+12K+24K	5,680	7,573	15,147			6,000	8,000	16,000		
TM30D6MO	9K+18K+18K	5,680	11,360	11,360			6,000	12,000	12,000		
TM30D6MO	12K+12K+12K	9,467	9,467	9,467			10,000	10,000	10,000		
TM30D6MO	12K+12K+18K	8,114	8,114	12,171			8,571	8,571	12,857		
TM30D6MO	9K+9K+9K+9K	7,100	7,100	7,100	7,100		7,500	7,500	7,500	7,500	
TM30D6MO	9K+9K+9K+12K	6,554	6,554	6,554	8,738		6,923	6,923	6,923	9,231	
TM30D6MO	9K+9K+9K+18K	5,680	5,680	5,680	11,360		6,000	6,000	6,000	12,000	
TM30D6MO	9K+9K+12K+12K	6,086	6,086	8,114	8,114		6,429	6,429	8,571	8,571	
TM30D6MO	9K+12K+12K+12K	5,680	7,573	7,573	7,573		6,000	8,000	8,000	8,000	

TM30D6MO Dimensions

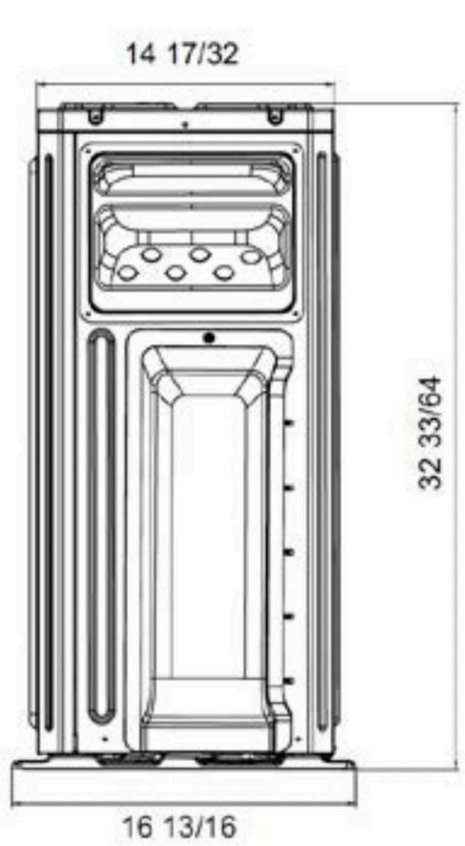

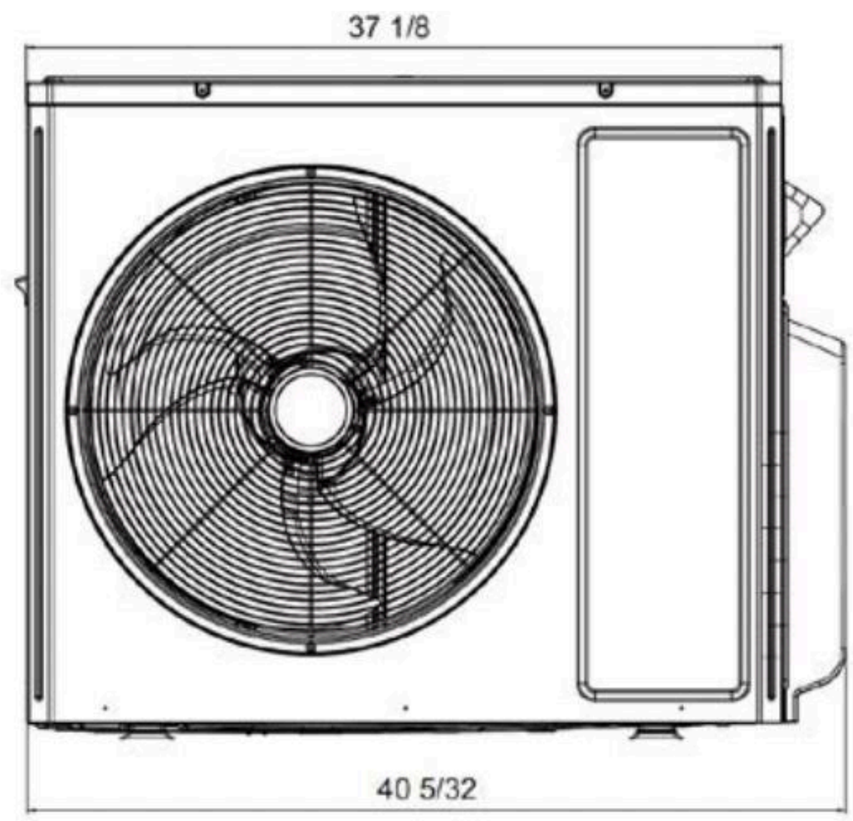

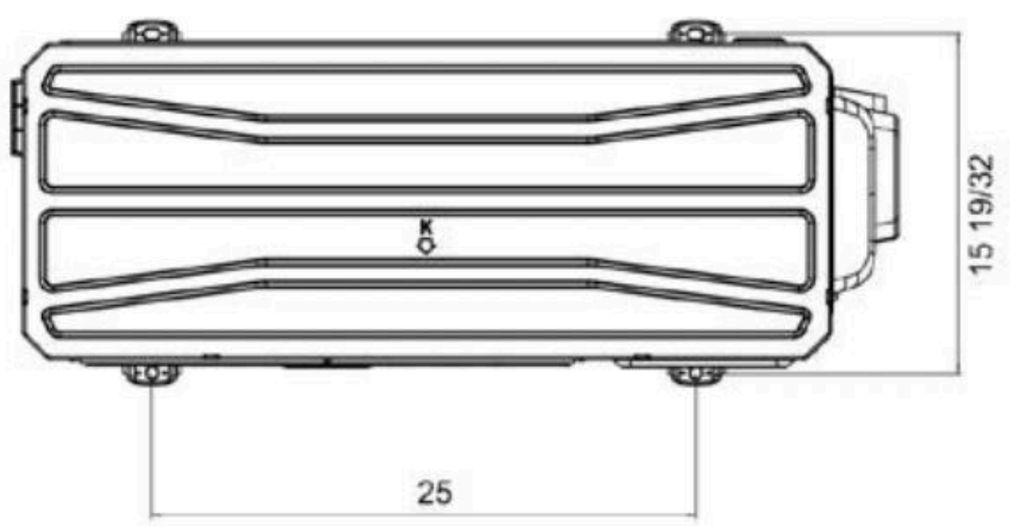

Clearances

Outdoor Unit – Minimum clearance

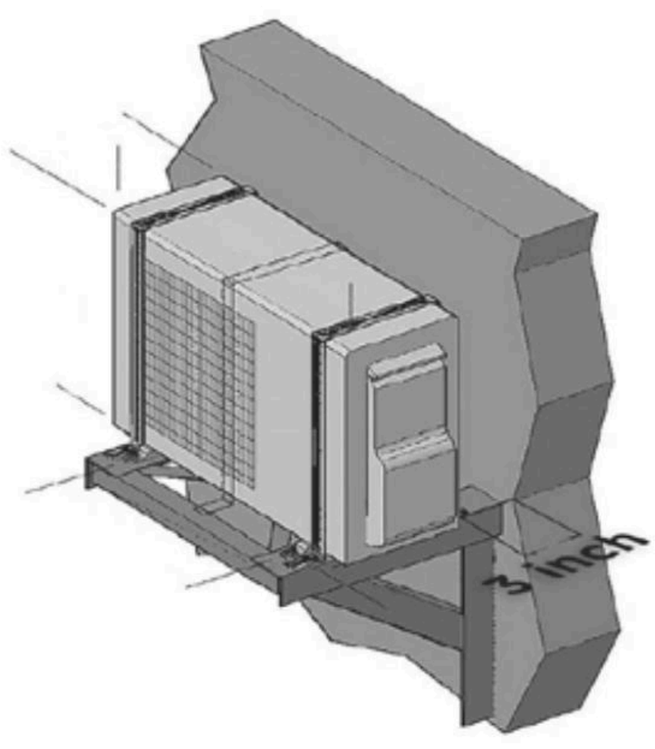

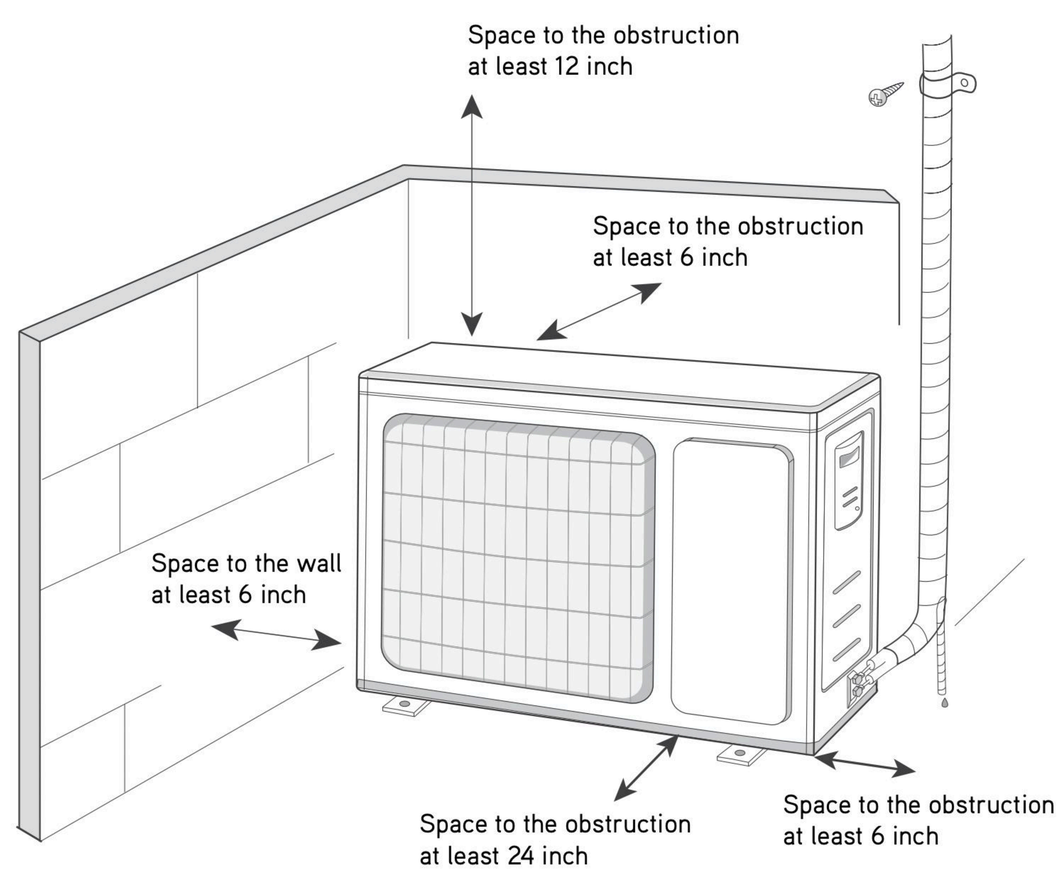

NOTE:

If bottom of the unit is free of airflow obstructions similar to the mounting bracket figure, the clearance to the wall on the back can be reduced to 3 inches.