SUBMITTAL DATA

TM09D6OCI
9000 BTU/H One Way Cassette Heat Pump System

Job Name	Location	Date
Purchaser	Engineer	
Submmited to	For	
Unit Designation	Schedule No.	

YBE1FB5F	TM09D6OCI	XE72-44/E (Optional)

GENERAL FEATURES

- High Efficiency DC Inverter Technology
- Compact and Quiet Design
- Multiple Fan Speeds
- Swing Louver Control
- Internal Condensate Drain Pump W/ Sentry Float Switch
- Wireless Remote with LCD Display Included
- Optional XE72-44/E Wired Controller
- Low Ambient Cooling and Heating
- (Indoor and Outdoor) Copper Tube / Aluminum Fin
- Blue Colored Fin - 500 Hrs Salt Spray Tested
- New R32 Refrigerant with Refrigerant Sensor

SPECIFICATIONS, FEATURES & FUNCTION SUMMARY

INDOOR MODEL			TM09D6OCI
System Type			HEAT PUMP
SYSTEM PERFORMANCE			
Cooling	Min - Max	Btu/h	900 - 14,100
	Capacity @95°F	Btu/h	9,100
Heating	Min - Max	Btu/h	900 - 15,500
	Capacity @47°F	Btu/h	10,500
	Capacity @17°F	Btu/h	7,200
	Capacity Max @5°F	Btu/h	9,400
SEER2			22.0
EER2			13.1
HSPF2			9.5
COP @5°F			1.97
Cooling Temperature Range		°F	-20 - 122
Heating Temperature Range		°F	-22 - 86
Refrigerant Type			R32
INDOOR UNIT			TM09D6OCI
Air flow (Min-Max)		CFM	200 - 324
Sound Pressure Level (Min - Max)		dB(A)	31 - 37
Dehumidification		pt/hr	1.69
External Dimensions (L x D x H)		in	38-55/64 × 15-5/32 × 7-1/64
Package Dimension (L x W x H)		in	51-29/64 × 19-23/32 × 12-13/64
Net Weight		lbs	41.9
Gross Weight		lbs	57.3
CASSETTE GRILLE (REQUIRED)			**TD01**
Grille Dimension (L x D x H)		in	47-1/4 × 18-7/64 × 2-11/64
Package Dimension (L x W x H)		in	49-13/16 × 21-1/8 × 4-25/32
Weight (Net / Gross)		lbs	9.26 / 13.23
REFRIGERANT PIPING			
Refrigerant Charge - R410A		oz	30
Additional Charge		oz/ft	0.2
Line Set Sized by Indoor Unit (Liquid - Gas)		in	1/4 - 3/8
Pre-Charge Length		ft	25
Pipe Length (Min - Max)		ft	10 - 66
Max. Pipe Elevation		ft	40
ELECTRICAL			
Power Supply			208-230V / 1Ph / 60Hz (Powered by the Outdoor Unit)
Voltage Range (Min - Max)		VAC	187 - 253
Rated Current - Cooling		A	4.73
Rated Current - Heating		A	6
MCA		A	10
MOCP		A	15
Suggested Breaker Size		A	10
Main Power Wire Size		AWG	Per Local Code
Interconnecting Wire Size		AWG	14 / 4

FEATURES & FUNCTIONS SUMMARY

SYSTEM FEATURES	
Inverter Type	G20 with Field Oriented control (FOC)
Ultra Low Frequency Torque Control	Yes
Power Factor Correction	Yes
Compressor Type - Inverter	High Efficiency Rotary
Basepan With Electric Heater	Yes
Indoor & Outdoor Fin Coating (Blue Fin)	Yes
Intelligent Defrosting	Yes
Intelligent Preheating	Yes
Low Voltage Startup	Yes
Memory/Power Failure Recovery	Yes
Self Diagnosis	Yes
Wired Controller Interface	Yes
WiFi Included	No
Indoor Fan Type	Centrifugal
Multi Fan Speeds	4 Speeds
Indoor Unit Display	Yes
Auxilary Electrical Heater	No
Ventilation (Outdoor Air)	Yes
REMOTE CONTROLLER FUNCTIONS	
Auto Mode	Yes
Auto Fan	Yes
Auto Swing (Horizontal Auto Swing)	No
Auto Swing - 180˚ (Vertical Auto Swing)	Yes
Clock	Yes
Dry Mode	Yes
Dry Anti-Mildew (X-Fan) Mode	Yes
Energy Saving Mode	Yes
Dirty Filter Alert	No
Fan Speed Control (7 Speeds)	Yes
I Feel Function	Yes
Privacy Lock	Yes
Quiet Mode	Yes
Room Temperature Display	No
Sleep Mode	Yes
3 Sleep Mode Options	Yes
Timer Mode	Yes
Turbo Mode	Yes
Display On/Off Control	Yes
Freeze Guard Mode	Yes
Power Failure Mode	Yes

NOTE:
Please check the Multi-zone submittals for Non-Ducted or Mixed Performance table.

DIMENSIONS

INDOOR UNIT

Unit: inch

TM09D6OCI	
DIMENSIONS	
A	47-1/4
B	43-57/64
C	40-7/16
D	38-55/64
E	18-7/64
F	16-11/32
G	15-5/32
H	10-9/32

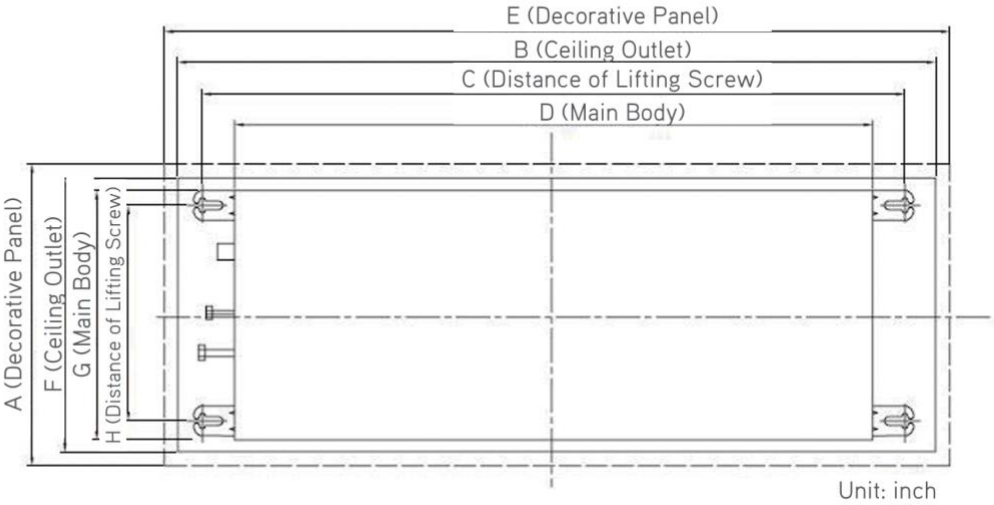

CLEARANCES

INDOOR UNIT
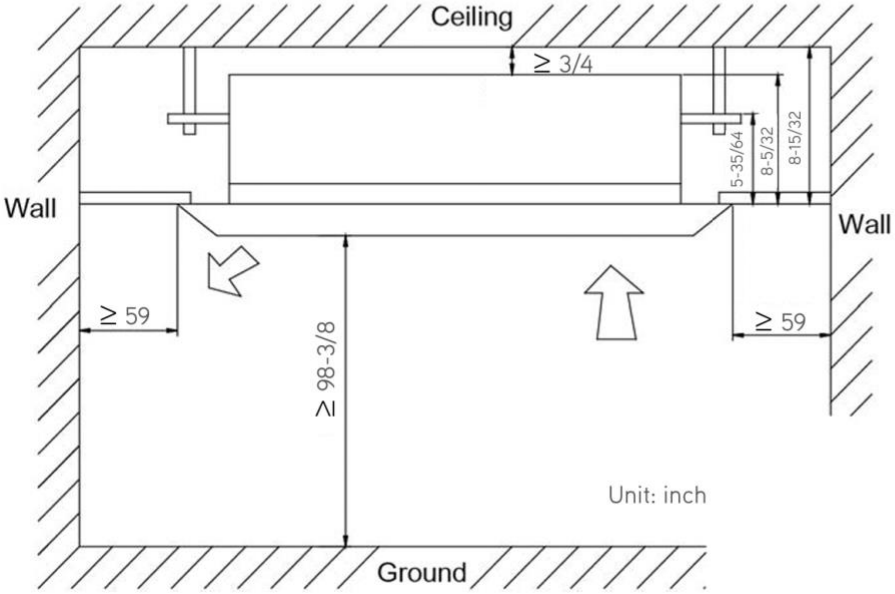
Minimum clearence