OPERATION MANUAL



Dropmaster

MODEL DM25

OPERATION MANUAL

2357 Ventura Drive, Suite 108
Woodbury, MN 55125
Phone: 651-917-0644
Toll-Free:1-800-632-2304
dropmaster.sales@nfpaglobal.com

Table of Contents

I.	Introduction	page 2
II.	Safety Instructions	page 3
III.	Operations Procedures	page 6
IV.	Troubleshooting	page 7
V.	Maintenance	page 8
VI.	Model Information – options/replacement parts	page 9
VII.	CE Declaration of Conformity	page 10
VIII.	Warranty	page 11
IX.	Maintenance information for Vapor Oil Pump	page 14
X.	Parts Return Policy	page 20

KEEP THIS DOCUMENT FOR FUTURE REFERENCE

I. Introduction

Thank you for purchasing the Dropmaster DM25. The Dropmaster was originally designed to remove excess water and odor from fire sprinkler systems prior to repairs and change outs.
However, the Dropmaster DM25 can be used on numerous other applications such as boilers, heat exchangers, air handlers, chillers, and a variety of closed loop piping systems. This manual mostly details the Dropmaster being used on fire sprinkler systems; however, the same basic principles can be applied to the aforementioned applications.

The Dropmaster DM25 is a rugged, durable tool built with components rated for continuous duty use. In certain applications, the Dropmaster is capable of 24/7 operation. By following the maintenance guidelines in this manual, your Dropmaster should provide years of service and significant return on investment.

Every Dropmaster goes through a rigorous series of quality control tests in our manufacturing facility. Our fail-safe vacuum system is set by our highly trained technicians to 10" Hg to prevent the system from damaging grooved couplers. The Dropmaster is built on a custom designed hand cart, with 10 inch pneumatic tires. This design allows the Dropmaster to fit easily through most standard doorways and maneuver around job sites. Each Dropmaster comes with 20-foot-long durable, high quality intake and discharge hoses. Replacement and custom length hoses, as well as replacement parts, can be order directly from Dyne.

The Dropmaster DM25 has several safety features you should be aware of. The 3/4 horsepower, high torque – low amp motor has manual thermal overload protection. Additionally, each unit is supplied with a 20' GFI protected, 12-gauge power cord. **Extension cords should never be used with the Dropmaster.** The vacuum pump and drive motor feature metal safety guards that must be in place during operation. The Dropmaster DM25 has a newly redesigned noise suppression muffler system which has been factory tested below 80db.

Your Dropmaster DM25 should always be transported securely, in the upright position. An optional hitch mounted carrier can be purchased for the Dropmaster. The hitch mounted carrier makes transporting the unit easier and saves valuable space in your service vehicle.

The Dropmaster system works by drawing a regulated 10" Hg vacuum on fire sprinkler systems and process piping prior to making repairs and change outs. By eliminating excess water and odor, repairs and change outs can be made in a neat, clean and timely manner. By eliminating the need to use buckets and tarps, decreasing set up and clean up times, the Dropmaster can significantly reduce job time and increase profit. Your Dropmaster can also be used for winterization of various piping systems.

The team at Dyne prides themselves on their products and world class customer service. Please read this manual thoroughly before operating your new Dropmaster DM25. If you have questions or concerns regarding our product, please contact us and we will gladly direct you through the initial set up, use, and maintenance.

II. Safety Instructions



Read these safety instructions and the original instructions before using the device for the first time. Act in accordance with them. Keep the information for future references or for future owners.

- In addition to the notes in the operating instructions, you also need to take into consideration the general safety regulations and accident prevention guidelines applicable by law.
- Warnings and information notices attached to the device provide important information for hazard-free operation.

Hazard levels

DANGER

- *Indication of an imminent threat of danger that will lead to severe injuries or even death.*

WARNING

- *Indication of a potentially dangerous situation that may lead to severe injuries or even death.*

CAUTION

- *Indication of a potentially dangerous situation that may lead to minor injuries.*

ATTENTION

- *Indication of a potentially dangerous situation that may lead to damage to property.*

Personal Protective Equipment

CAUTION ● *Wear suitable eye and hearing protection when working with the device.*

General Safety Instructions

DANGER ● *Disconnect power source before servicing or cleaning unit.* ● *Do not permit unauthorized personnel to operate the unit at any time.* ● *Do not pull alcohol or other combustible materials in the vacuum tank.* ● *Risk of asphyxiation. Keep packaging film out of the reach of children.*

WARNING *● Only use the device for its proper use. Take into account the local conditions and beware of third parties, in particular children, when working with the device. ● Never operate vacuum at pressures or speeds in excess of those recommended by manufacturer. ● The device is not intended for use by persons with restricted physical, sensory or mental abilities or those lacking in experience and / or lacking in knowledge. ● Only people who have been instructed on how to use the device, or have proven their ability to operate it, and have been explicitly instructed to use it, must use the device. ● Children must not operate the device. ● Children must be supervised to prevent them from playing with the appliance.*

CAUTION *● Safety devices are provided for your own protection. Never modify or bypass safety devices. ● Some elements on the unit may be quite warm in normal operation. Do not touch or permit combustible materials to come in contact with these components. ● Do not touch moving parts, while the Dropmaster is in service.*

Risk of Electric Shock

DANGER *● Only connect protection class I devices to properly earthed power sources. ● The voltage indicated on the name plate must match the voltage of the power source. ● Never touch the mains plug and socket with wet hands.*

WARNING *● Only connect the device to an electrical connection which has been set up by a qualified electrician as per local code, IEC (EU), NEC, CSA or NOM (NA). ● In case of any foam formation or escaping liquids, switch off the device immediately and remove the mains plug. ● Check that the mains connection cable with mains plug is undamaged each time before using the device. To avoid any possible danger, a damaged mains connection cable must be immediately replaced by the manufacturer, or the authorized customer service department or a qualified electrician. ● Do not damage the power supply and extension cable by running over it, crushing or yanking it or similar. Protect the power supply cable from heat, oil and sharp edges. ● Only use the mains connection cable prescribed by the manufacturer, including when replacing the cable. For order no. and type see operating instructions.*

ATTENTION *● Switch-on procedures will generate short-term voltage drops. ● Unfavorable mains conditions may cause other devices to be impaired. ● In case of a network impedance of less than 0.15 ohms, no malfunctions are to be expected.*

Operation

DANGER *● Unit should be operated in a clean and well-ventilated area. ● When using the device in hazard zones (e.g. service stations), adhere to the respective safety regulations. ● Operation in areas where there is a risk of explosion is prohibited. See chapter Intended use in the operating instructions. ● Risk of explosion. Certain substances can form explosive vapors or mixtures with the suction air due to turbulence in the device.*

WARNING *● Only use the Dropmaster for siphoning water or non-combustible antifreeze from fire sprinkler systems, boilers, heat exchangers, chillers, or, or similar types of piping systems. ● These system that are being work on by properly trained personnel. This is expressly designated for this use. ● Observe the safety instructions in the operating instructions.*

CAUTION *● Check the device and the accessories each time before operation, in particular the mains connection and cable, to make sure it is safe and working correctly. Pull out the mains plug in case of any damage and do not use the device. ● Never leave the device unattended when it is not switched off and with the mains plug removed.*

ATTENTION *● Do not operate the device at temperatures below 0 °C. ● Never use the device outdoors at low temperatures.*

Devices with Pneumatic Tires

CAUTION ● *Never exceed the maximum permissible tire filling pressure. The tire filling pressure needs to be read on the tire and if necessary, on the wheel rim. If these values differ, use the smaller value. Make sure that the pressure reducer is set correctly on the compressor before setting the tire filling pressure.*

Care and Service

WARNING ● *Prior to cleaning, maintenance and replacement of parts, the device needs to be switched off and the mains plug removed. Switch the device off before changing over to another function.*

CAUTION ● *Repairs may only be carried out by approved customer service sites or staff qualified in this area who are familiar with all relevant safety instructions.* ●
What item do we need to make sure is completed in a regular time frame.

ATTENTION ● *Pay attention to safety inspection for mobile devices for industrial use in accordance with the locally applicable regulations.* ● *Do not clean the device with a hose or high-pressure water jet.* ● *Please note separate safety instructions are enclosed for the vacuum pump used in the Dropmaster. This must be reviewed before operating Dropmaster*

Accessories and Spare Parts

CAUTION ● *Only use accessories and spare parts which are approved by the manufacturer.* ● *Only original accessories and original spare parts ensure that the appliance will run fault-free and safely.*

Transport

CAUTION ● ***Use caution when transporting Dropmaster unit*** ● *Shut the motor down prior to transportation.* ● *Secure the device, taking into account its weight, make sure unit is properly secured in transporting vehicle.* ● *Transport unit in the upright position.* ● *See chapter Technical data in the operating*

III. Dropmaster Operating Procedures

Before beginning, check the oil level in the reservoir, check for loose fittings, connections, and bolts, make sure barrel drain plug is in place, and check that the basket strainer is clean and free of debris and build up.

1. Follow normal procedure for shutting down and draining sprinkler system before connecting the Dropmaster.
2. Connect the Dropmaster to proper electrical source (120 v 20 amp) and turn unit on.
3. Check the Fire Department Connection to make certain tight-fitting caps are in place if above the alarm valve.
4. Close all outlets from the sprinkler system other than the one the Dropmaster will be connected to.
5. Connect the suction side of the Dropmaster with suction valve closed, to your choice of outlet and connect the discharge hose to a suitable drain.
6. Turn unit on and open suction valve, allow the Dropmaster to pull a vacuum on the system. Check vacuum gauge for proper reading of 10Hg. (Please note that the vacuum reading can be slightly affected by temperature and elevation).
7. Open an outlet (Inspector test drain, auxiliary drain or sprinkler outlet) on far side of system from where work is to occur. Allow the Dropmaster to remove any trapped water from the mains.
8. When water has been removed close the outlet that was opened in step 7.
9. Begin working. Always start at the farthest point and work back toward the unit.
10. If at any point the Dropmaster gets flooded see Trouble Shooting step #5.
11. Drain barrel daily.

IV. Troubleshooting

1. IF NOT RUNNING:

- Verify GFI cord set is plugged into an active outlet—the indicator light will be on.
- Make sure main electric switch is in the on position. Green electric motor should be operating.

2. IF NO VACUUM:

- Verify ½" tank drain plug is installed.
- 1" suction valve should be in closed position.
- Vacuum gauge should indicate 10 hg vacuum. Note: vacuum reading can vary slightly depending on operating altitude and temperature.
- Check for loose nuts on tank flanges and check barrel ring bolt. **Caution: do not over tighten barrel ring bolt since this can cause distortion of the ring and barrel lid.**

3. IF LOW OR NO VACUUM AT END OF SUCTION HOSE:

- Clean out 1" wye strainer—remove 3/8" plug and then remove large bushing and pull out strainer basket. Check for any blockages.

4. IF GUAGE READS 10" Hg AND THERE IS NO SUCTION ON END OF SUCTION HOSE:

- With 1" valve open reset anti flood device.

5. TO RESET ANTI-FLOOD DEVICE:

- Unplug unit and remove ½ drain plug from back of tank, remove all water from tank, lightly tap the tank and a "thud" should be heard. The anti flood is now reset. Replace ½" drain plug and proceed.

6. IF MOTOR IS NOT RUNNING:

- Motors are manual thermal overload protected. Allow 30-40 minutes for unit to cool.
- To reset/push rubber button until you hear a loud and distinct click Use proper electrical supply (120v 20amp)

7. IF NO WATER DISCHARGE:

- Please call manufacturer.

V. Maintenance

Daily:

- Check for any unusual noise, failure to build vacuum, overheating, vibration and correct before damage of a serious nature can develop.
- Check and add oil to vacuum pump reservoir, if necessary. The “U” shaped hose on the reservoir acts as a sight glass. Oil level should be ¾ of the way up the hose.
- Flush and clean storage tank after daily use.
- Unit should be stored indoors in a clean, dry location.
- Check and clean strainer. Remove the strainer basket and it is free of debris or sludge. Replace the basket if needed.

Weekly:

- Keep compressor clean for efficient operation.

Monthly:

- Check and tighten all bolts as required. Check air connections and joints for leaks – tighten if necessary.

As required:

- If vacuum level drops below 10”Hg it may be necessary to flush the vacuum head. Please follow the procedure found on page 16.

VI. Model Information

Model	Information
DM25-120-60	120V 60Hz 12.8A Max
DM25-120-50	120V 50Hz 13.1A Max
DM25-220-50	220V 50Hz 6.7A Max
DM25-240-50	240V 50Hz 5.5A Max

Dropmaster DM25 Features

- **NEW!** Stainless Steel drum for improved durability.
- **NEW!** Stainless Steel parts including cart, muffler, manifold, elbows, and nipples, etc.
- Designed and built for 24/7 operation, all of the Dropmaster's components are rated for continuous duty.
- Powered by a ¾ hp, high torque, low amp motor.
- 1/3 hp discharge pump – capable of pumping 38gpm.
- Factory set, fail safe vacuum relief valve – maintains 10" Hg vacuum.
- 10" Pneumatic or hard rubber tires – easily rolls over most job site obstacles.
- 1" Suction and discharge hoses – allows set up virtually anywhere.
- Factory tested and approved for Uponor PEX Type A.
- Can be used on all types of process piping including PVC and CPVC.
- Removes contaminants and debris from refrigeration lines.
- Can be used on a variety of closed loop piping systems.

Replacement parts as well as custom made hoses in lengths up to 100 feet can be ordered directly through Dyne.

Dropmaster by Dyne is the industry leader in innovative, time saving tools. Please check our website, **www.nfpaglobalsolutions.com/dropmaster** for information.

CE DECLARATION OF CONFORMITY

This Declaration of Conformity is issued under the sole responsibility of the manufacturer

Dyne Fire Protection Labs, an NFPA Global Solutions Company
2357 Ventura Drive, Suite 108
Woodbury, MN 55125, U.S. A
dropmaster.sales@nfpaglobal.com

Authorized EU Representative:
Borbotech BV
Virulyweg 21P
7602 RG Almelo, Nederland
info@borbotech.eu

Declare that the product: Dropmaster

Model: *DM25-120-50; DM25-220-50, DM25-240-50*

Year of Construction: 2026

Rated: *120V 50 Hz 13.1A Max / 220V 50Hz 6.7A Max / 240V 50Hz 5.5A Max*

The Dropmaster is designed to remove excess water from fire sprinkler systems prior to repairs and change outs. Intended for use of non-flammable liquids, the DM25 can be used on numerous other applications such as boilers, heat exchangers, air handlers, chillers, and a variety of closed loop piping systems

The Dropmaster has been manufactured in conformity with the following Standards and Directive below:

BS EN ISO 12100:2010	Safety of machinery – General principles for design – Risk assessment and risk reduction
BS EN 60204-1:2018+A1:2025	Safety of Machinery — Electrical Equipment of Machines
BS EN 809:1998+A1:2009	Pumps and pump units for for liquids — Common safety requirements
BS EN IEC 61000-6-1:2019	Electromagnetic compatibility (EMC) - Part 6-1: Generic standards - Immunity standard for residential, commercial and light-industrial environments
BS EN IEC 63000:2018	Technical documentation for the assessment of electrical and electronic products with respect to the restriction of hazardous substances

2006/42/EC	Machinery Directive
2014/30/EU	EMC Directive
2011/65/EU	RoHS Directive (The restriction of the use of certain hazardous substances in electrical and electronic equipment)

The Technical File is held by: Dyne Fire Protection Labs, an NFPA Global Solutions Company
2357 Ventura Drive, Suite 108
Woodbury, MN 55125, U.S. A

Place of Issue: Woodbury, MN 55125, U.S. A

Signature: 

Date of Issue: November 12, 2026

Name: Grant Lobdell
President

VIII. Warranty

Dyne Fire Protection Labs, Inc., an NFPA Global Solutions™ company ("Dyne"), warrants to the original purchaser of the Dropmaster (the "Original Purchaser") that the Dropmaster and its parts furnished by Dyne will, when properly installed, used, operated and maintained by the Original Purchaser in accordance with the Dropmaster manual, be free from defects in material and workmanship for a period of ***Ninety (90) Days*** from the date of shipment by Dyne. Any Dropmaster that Dyne determines, after inspection, does not meet these standards, and for which Dyne receives written notice of the claimed defect within this ninety-day period, will, at Dyne's sole option, be repaired or replaced without charge. Any defect or condition that has been caused by misuse, unauthorized use or modification, or abnormal conditions of operation or maintenance, will be repaired by Dyne or its designee at Dyne's then current repair charges. In this case, at the request of the Original Purchaser, Dyne will submit an estimate of the repair cost to the Original Purchaser before making the repairs. If Dyne determines that no defect covered by this warranty exists, the Original Purchaser shall pay Dyne's then current inspection and return shipping charges. Any defective Dropmaster or component must be returned promptly to Dyne, with proof of purchase and a return authorization issued by Dyne, at the sole expense of the Original Purchaser. Any loss or damage during shipment of a defective Dropmaster or component shall be at the Original Purchaser's sole risk. Repaired or replacement parts are warranted only for the remainder of the original warranty period. This warranty is not transferable.

The motor and vacuum pump are warranted for One (1) Year from the date of shipment by Dyne, subject to all of the terms, conditions, exclusions and limitations of this warranty.

Owner responsibility includes providing normal maintenance as required by Dyne, including the daily maintenance described in the Dropmaster manual. This warranty does not apply (1) if the pump(s) or any other component has been damaged due to improper use, neglect, accident, misuse, failure to perform required maintenance, freezing, or exposure to extremities of dryness or humidity, or (2) if the pump(s) or any other component has been serviced or modified by other than Dyne authorized personnel. No other warranty expressed or implied is given. The repair or replacement of the pump(s) is your exclusive remedy. In no event shall Dyne be liable for consequential or incidental damages. Some states do not allow the exclusion or limitation of this warranty so the above exclusions or limitations may not apply to you. This warranty gives you specific legal rights and you may have other rights, which vary, from state to state.

Discharge water pump has a ninety (90) day warranty from the date of shipment by Dyne, subject to all of the terms, conditions, exclusions and limitations of this warranty. This warranty does not cover product failure resulting from:

1. Normal wear.
2. User abuse, including immersing non-submersible products, dents or damage to barrel; freezing; or debris or foreign material entering the pump.

WARRANTY EXCLUSIONS. EXCEPT AS EXPRESSLY PROVIDED IN THIS WARRANTY, DYNE MAKES NO WARRANTY OF ANY KIND, EXPRESSED OR IMPLIED BY OPERATION OF LAW OR OTHERWISE ABOUT THE DROPMASTER INCLUDING, BUT NOT LIMITED TO, ANY IMPLIED WARRANTIES OF MERCHANTABILITY, FITNESS FOR A PARTICULAR PURPOSE OR NON-INFRINGEMENT, OR ANY WARRANTY ARISING FROM COURSE OF DEALING OR USAGE OF TRADE. THE SOLE AND EXCLUSIVE REMEDY OF THE ORIGINAL PURCHASER FOR BREACH BY DYNE OF ANY WARRANTY IN THIS WARRANTY SHALL BE LIMITED, AT DYNE'S SOLE ELECTION, TO THE REPAIR OR REPLACEMENT OF THE DROPMASTER OR ANY OF ITS COMPONENTS, OR, IF DYNE DETERMINES THAT REPAIR OR REPLACEMENT IS NOT COMMERCIALLY PRACTICABLE, REFUND OF THE PURCHASE PRICE PAID FOR THE DROPMASTER AFTER ITS RETURN TO DYNE. DYNE NEITHER ASSUMES, NOR AUTHORIZES ANY PERSON TO ASSUME FOR IT, ANY ADDITIONAL LIABILITY OR RESPONSIBILITY IN CONNECTION WITH THE DROPMASTER AND NO AGENT, EMPLOYEE OR REPRESENTATIVE OF DYNE HAS THE RIGHT TO MODIFY OR EXPAND THESE WARRANTIES AND NO SUCH MODIFICATION OR EXPANSION MAY BE RELIED UPON BY THE ORIGINAL PURCHASER. NO STATEMENT IN DYNE'S WEBSITE, CATALOGS, ADVERTISING, VIDEOS OR OTHER PRODUCT LITERATURE, INCLUDING STATEMENTS ABOUT PERFORMANCE, DUTY RATING, LABOR SAVINGS OR SYSTEM COMPATIBILITY, CONSTITUTES A WARRANTY.

The warranty shall not apply to a Dropmaster unit or to any of its components if it has been subjected to operations beyond design limitations, use contrary to the Dropmaster manual, inadequate or improper electrical supply, negligent maintenance, abuse, or damage by alteration not expressly authorized in writing by Dyne.

LIMITATION OF LIABILITY. To the extent allowable under law, Dyne's liability for consequential, incidental, special, indirect and punitive damages is expressly disclaimed, including without limitation water damage, damage to property, loss of use, downtime, labor costs, lost profits, and any damages arising from the impairment of any sprinkler or fire protection system, whether arising in contract, tort (including negligence), strict liability or otherwise, even if Dyne has been advised of the possibility of such damages. Dyne's liability in all events is limited to and shall not exceed the purchase price actually paid by the Original Purchaser for the Dropmaster giving rise to the claim. Any action for breach of this warranty must be commenced within one (1) year after the cause of action accrues.

Dyne is not responsible for work done or expense incurred in connection with repair or replacement unless Dyne specifically authorizes it in writing. Dyne accepts no liability of any kind under this warranty for consequential damages or for the negligence of others. These warranties are exclusive, and no warranty extends beyond the periods stated in this warranty. These express warranties replace all other warranties, whether written, oral or implied, and Dyne expressly excludes the implied warranties of merchantability and fitness for a particular purpose.

GOVERNING LAW AND VENUE. This warranty and any claim arising out of or relating to the Dropmaster, whether in contract, tort or otherwise, shall be governed by the laws of the State of Minnesota, without regard to its conflict of laws principles. The United Nations Convention on Contracts for the International Sale of Goods shall not apply. Any action arising out of or relating to this warranty or the Dropmaster shall be brought exclusively in the state courts located in Washington County, Minnesota or the United States District Court for the District of Minnesota, and the Original Purchaser consents to the personal

jurisdiction of and venue in those courts. However, if the Original Purchaser is located outside the United States, any dispute arising out of or relating to this warranty or the Dropmaster shall be finally resolved by binding arbitration administered by the International Centre for Dispute Resolution under its International Arbitration Rules before a single arbitrator. The seat of arbitration shall be Minneapolis, Minnesota, and the arbitration shall be conducted in English. Judgment on the award may be entered in any court of competent jurisdiction. Nothing in this paragraph prevents Dyne from seeking payment of amounts owed or injunctive relief in any court of competent jurisdiction.

WARRANTY CLAIMS:

All warranty claims shall be made to DYNE, **1-800-632-2304**, and shall be supported by satisfactory evidence in respect of conditions herein noted. For a warranty claim please call DYNE for further instructions. Any part which is determined to be defective in material or workmanship and returned to DYNE as instruction will be, as the exclusive remedy, repaired and replaced at DYNE's option.

Maintenance Manual
For
Vapor Oil Pumps

Model – DM25

IMPORTANT
READ BEFORE INSTALLATION OF THIS UNIT

INSTALLATION INSTRUCTIONS

WIRING

All wiring for the installation of this unit should be done by a licensed electrician according to National and Local Electrical Regulations.

SINGLE PHASE MOTOR UNITS

All single-phase motors are wired for proper direction of rotation. Unless otherwise requested motors are wired for low voltage service.

VAPOR OIL PUMPS

Use a 10W-30 Oil for all Conde Vapor Oil Pumps. When starting new vapor oil pumps, fill oil reservoir above the fittings in which the wicks are inserted. This will give the Pump extra oil for the first two hours of operation.

When refilling, fill to just below oil wicks. Capacities:

Model 3..... 1 quart Maximum.

VACUUM RELIEF VALVE

The vacuum relief valve is factory preset at 10in/hg, do not exceed.

OPERATIONAL LIMITS

Max Vacuum (Continuous) 15IN/Hg Max

Vacuum (Intermittent) 25IN/Hg

FLUSHING INSTRUCTIONS FOR CONDE VAPOR OIL PUMPS

It may be necessary to flush your Conde Vapor Oil Pump to remove any gum or varnish buildup inside the pump that causes the vanes to stick in their slots. This is a simple maintenance operation and should be one of the first steps when troubleshooting a loss of vacuum in the system.

1. Remove the longer oil tube, which goes from the reservoir to the vacuum.

2. Be sure the exhaust is directed away from the motor. Be careful to contain any mist or spray.

3. Use kerosene or diesel fuel fluid for flushing process. While the pump is running under vacuum, simply insert the tube into the cleaning fluid and allow the pump to draw the fluid in. Alternately let air into the tube with the cleaning fluid. It can take up to 4 ounces of cleaning fluid to clean the pump.

4. In the same manner draw in about 5 ounces of oil to complete the flushing process.

5. Replace the oil tube to its original location. The unit is now ready to return to service.

Note: Under certain circumstances it may be necessary to repeat the flushing procedure.

INSTRUCTION OF DISASSEMBLY & ASSEMBLY

Disassembly:
Fig. A - Remove cooling fans
Fig. B - Remove dowel pins, cap screws, bearing cove & shins
Fig. C - Slide collar over shaft and tighten screws securely.
Fig. D - Screw the bolts into the 3 threaded holes in the opposite side of the pump that the collar is on. Turn the bolts alternating (no more that 1 turn at a time) until endplate slides off the pump shaft.
Fig. E - Remove the bearings from the endplate. (This can be done easily since the bearing is a slip in the endplate.)
Fig. F - Put the plate just removed back in place without the bearings then slide the collar over the shaft and tighten.
Fig. G - Remove the opposite endplate using the 3 bolts as previously done.

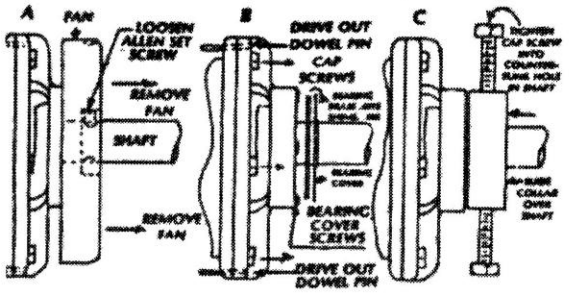

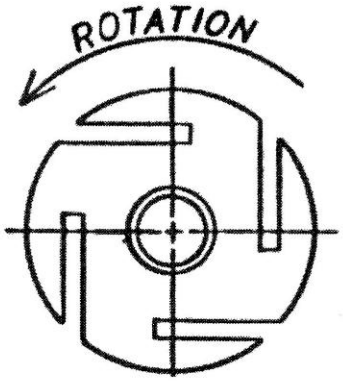

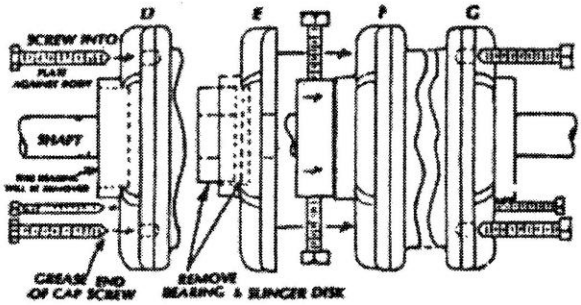

ASSEMBLY

1. Before assembly deburr all parts with a fine file. Determine correct rotor rotation (see drawing). Check the vane slots for free movement of vanes.
2. On model 2 Pumps start assembly with side of housing that has the dowel pin holes on the lift side of the housing. On model 3, start on side with dowel pin holes on the right. Note: dowel pin holes are always on the exhaust side of the pump. On oil lubricated pumps press the shaft seal in place and place the paper gasket in position on the housing. Install the endplate with the six hex screws and finger tighten. Drive the 2 dowel pins in place then tighten hex screws securely.
3. Insert rotor into housing according to rotor rotation and rotation arrows on the pump. (The pump must be assembled in the same position. This will align the rotor with the endplates and housing.)
4. Install the slinger over shaft. (green disk)
5. Press bearing on the shaft using a bearing installation tool or arbor press. IMPORTANT— press on the inner race of bearing only. Pressing on the plastic seal may cause damage to roller bearings.
6. Invert pump assembly and install the vanes into the slots.
7. Invert 2nd endplate as previously done but do not tighten screws and leave dowel pins out. Install bearing and slinger.
8. Apply downward pressure to rotor shaft so that the rotor bottoms out on the 1st endplate, while pressure is applied tighten hex screws evenly. Drive in dowel pins.
9. Shim the pump and install new bearing covers.

IMPORTANT—The pump should spin freely by hand when complete, if any binding is noticed repeat step 9.

10. Install cooling fans. Install all safety guards prior to starting unit.

VAPOR OIL PUMP PARTS

1 - Pump Housing
2 - CW Endplate
3 - CCW Endplate
4 - Rotor
5 - Oil Vane—GME137
6 - Bearing Cover
7 - Clutch Plate
8 - Oiler Tank—GME140
9 - Paper Gasket
10 -Clutch

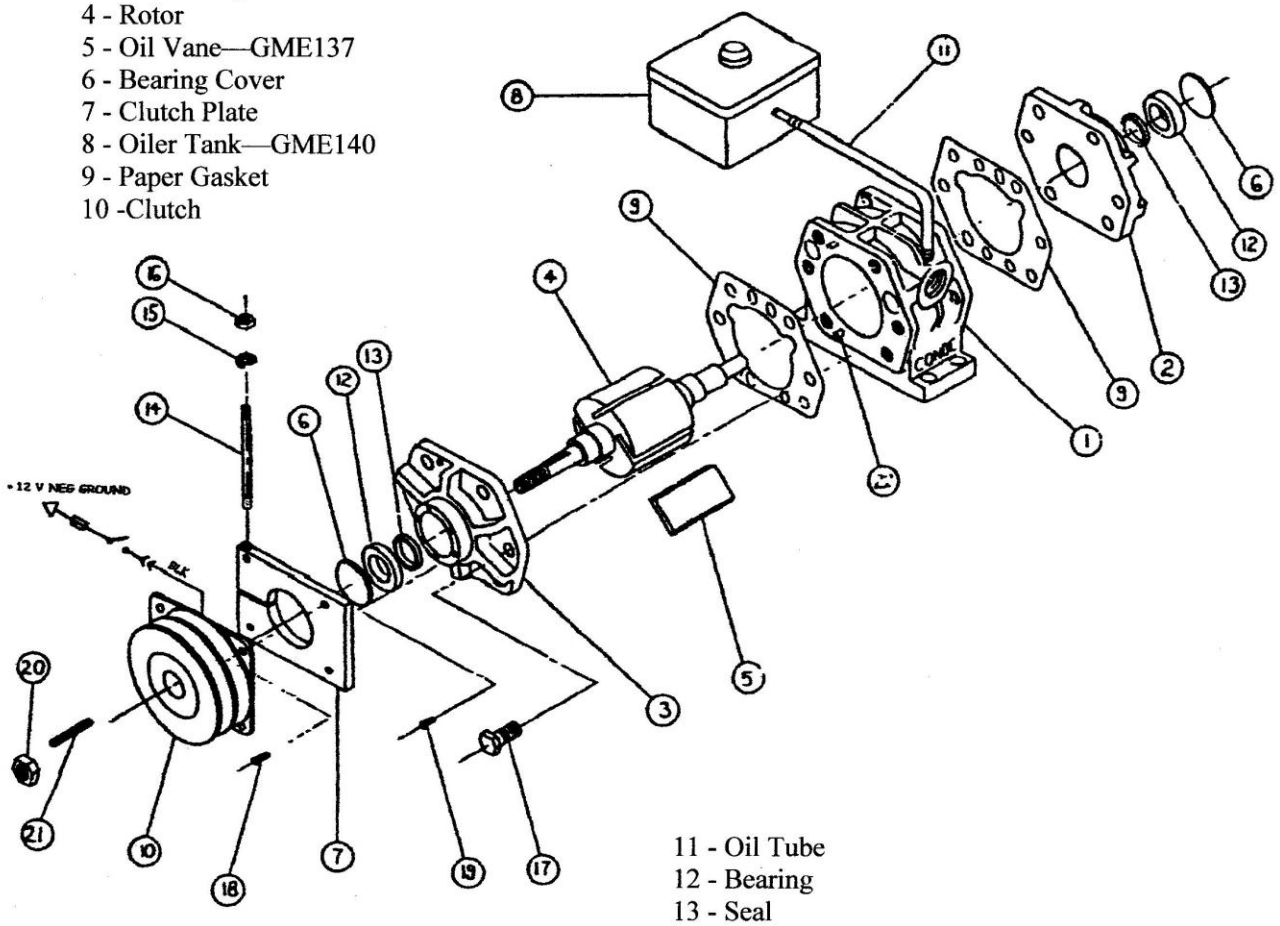

11 - Oil Tube
12 - Bearing
13 - Seal
14 - Clutch Stud
15 - Lock Washer
16 - Lock Nut
17 - Hex Screw
18 - Mounting Plate Screw
19 - Bearing Cover Screw
20 - Clutch Nut or Screw
21 - Key
22 - Dowel Pin—GME154
23.- Repair Kit—GME155 (Model 3 Vapor Oil)

Parts Return Policy

This policy applies to returns of new, unused Dropmaster parts purchased from Dyne Fire Protection Labs, Inc. ("Dyne") for reasons other than a defect. Claims that a part is defective are handled only under the Dropmaster Limited Warranty and are not returns under this policy.

Parts may be returned within thirty (30) days after the date of shipment by Dyne. Returned parts must be unused, uninstalled, in like-new condition and in the original packaging. All returned parts are subject to inspection by Dyne. No restocking fee will be applied unless the returned part does not pass inspection. If the returned part does not pass inspection, Dyne may deduct return fees of up to the full price of the part from the refund. Before returning a part, the purchaser must obtain a return authorization from Dyne. A completed parts return form, showing the return authorization number, must be included in the package. Shipping and handling fees, duties and taxes are the responsibility of the purchaser and are non-refundable. Risk of loss during return shipment remains with the purchaser. Refunds will be issued by check after Dyne receives and inspects the returned parts.

To request a return authorization and parts return form, contact dropmaster.sales@nfpaglobal.com.