318G

Skid Steer

JOHN DEERE





SMALL MACHINE, SIZABLE RESULTS

When you need small equipment that can rise high, master heavy loads, and deliver impressive boom- and bucket breakout forces, the John Deere 318G Skid Steer can be the do-it-all machine that fits the work you do. Its vertical-lift configuration, amped-up performance, and wide range of options are the result of some of the best ideas we've heard — and put into action — from users just like you. Whether you're buying your first machine or boosting the flexibility of an existing fleet, this reimagined compact is designed to elevate your bottom line.



FEATURES



It's easy to take control
Electrohydraulic (EH) ISO-pattern joystick controls that allow customized machine operations based on operator preference are standard on the 318G.

Power lifter
Vertical-lift boom combines height and reach at the top of the lift path with outstanding stability, making the 318G ideal for stacking and truck-loading applications.

Try it on for size
Weighing just over 6,500 pounds, this compact is easy to trailer behind a standard pickup truck using the convenient front and rear tie-downs. Heavy-duty tire option slims the 318G down to a narrow 60-inch width.

Imagine the possibilities
Ample axle torque and optimized boom and bucket breakout forces help carve out clay, push through piles, and heap the load.

Step up the pace
Two-speed transmission option provides faster transport speeds of up to 10 miles per hour, to move around the jobsite quicker and push productivity even further.

Packed for productivity
Low center of gravity, 30-degree bucket rollback, optional ride control, and optional hydraulic self-leveling help keep forks loaded and buckets full. Add capacity with up to two sets of rear counterweights.

Big ideas that deliver
Large cab entryway with swing-out door, generous foot- and legroom, sealing and pressurization to minimize dust and noise, and adjustable high-back sculpted seat optimize operator comfort. Overhead panel conveniently puts machine data on the left and control switches on the right. Easy-to-read LCD monitor reveals a wealth of vital operating info and advanced diagnostics.

Seeing is believing
Clear sightlines to the cutting edge and bucket corners, above and below the lift arms, and the jobsite ahead and behind instill confidence in close quarters. Optional LED side lighting and rearview camera further enhance visibility.

Tackle the to-do list
Swing-out rear door enables easy, ground-level access to daily service checkpoints and cooling system components. Neat freaks and rental yards can appreciate the convenient cab-footwell access that helps speed cleaning.

Work your connections
Equip your skid steer with your choice of over 100 available John Deere attachments to expand the flexibility of your operation. Increased auxiliary hydraulic flow and power compared to previous models boosts attachment performance. Add a snow blower, snow pusher, or angle broom to make quick work of winter's white stuff.



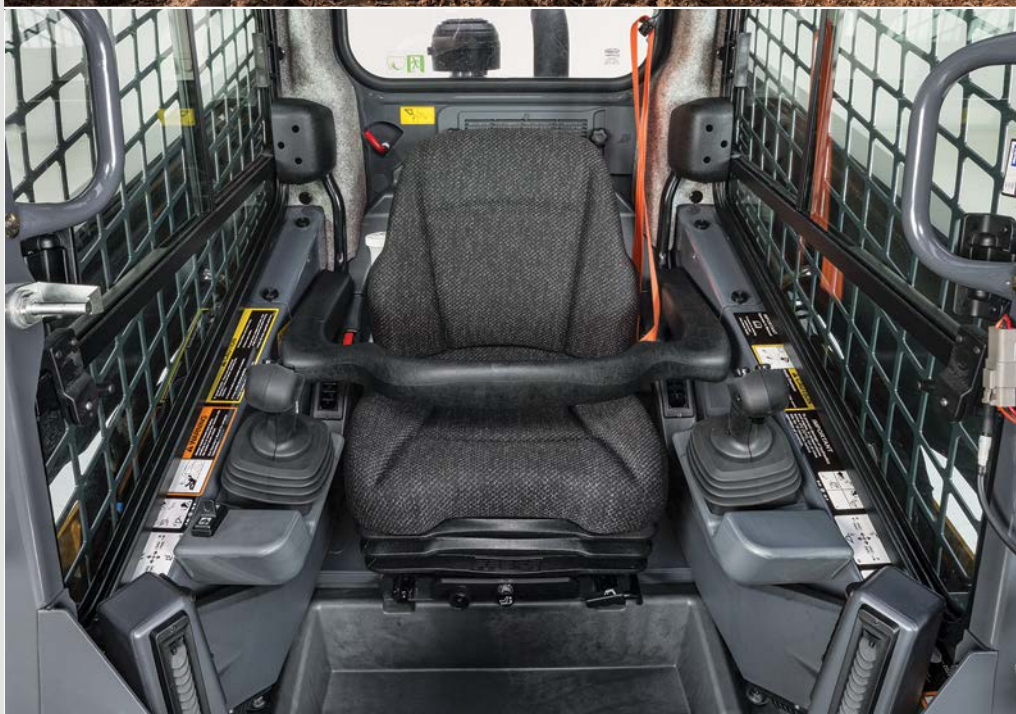







SWITCHING ATTACHMENTS ENABLES VERSATILITY IN ANY WEATHER OR SEASON

Safety first
Standard personal-protection features include in-cab-activated boom lock and triple-interlock system that detects the presence of the operator to help keep harm's way at bay.

Remote diagnostics and support
To maximize uptime and lower costs, JDLink™ connectivity provides machine location, utilization data, and alerts to help you maximize productivity and efficiency. JDLink also enables John Deere Connected Support™. Dealers use Expert Alerts based on data from thousands of connected machines to proactively address conditions that may otherwise likely lead to downtime. Your dealer can also monitor machine health and leverage remote diagnostics and programming capability to further diagnose problems and even update machine software without a time-consuming trip to the jobsite.*

*Availability varies by region. Options not available in every country.

318G SKID STEER SPECIFICATIONS

Engine	318G		
Manufacturer and Model	Yanmar 4TNV86CHT	Displacement	2.1 L (128 cu. in.)
Non-Road Emission Standard	EPA Final Tier 4/EU Stage IV	Rated Engine Speed	2,600 rpm
Cylinders	4	Torque Rise	16% at 1,690 rpm
Net Power (SAE J1349 / ISO 9249)	45.6 kW (61 hp) at 2,600 rpm	Aspiration	Turbocharged
Gross Rated Power (ISO 14396)	48.5 kW (65 hp) at 2,600 rpm	Air Cleaner	Dry dual element
Peak Torque	207 Nm (153 ft.-lb.) at 1,690 rpm		

Cooling	
Fan Type	Direct belt drive
Powertrain	
Type	Hydrostatic-manual or electrohydraulic (EH); 4 – 80 heavy-duty (HD) continuous-loop chain
Speeds	
Single	11.1 km/h (6.9 mph)
2 Speed, High	16.3 km/h (10.1 mph)
Axles	Induction-hardened, 1-piece forged axle shafts with maintenance-free oil-bath lubrication of inner and outer axle bearings
Maximum Axle Torque	6459 Nm (4,764 lb.-ft.)
Tractive Effort	3552 kgf (7,831 lbf)
Final Drive	High-strength, adjustment-free chains
Brakes	Integral, automatic, spring-applied, hydraulically released, wet-disc park brake
Hydraulics	
Pump Flow, Standard	63 L/m (17 gpm)
System Pressure at Couplers	23 787 kPa (3,450 psi)
Hydraulic Horsepower Flow (calculated), Standard	25 kW (33 hp)
Auxiliary Hydraulics	Optional connect-under-pressure with flat-faced couplers
Cylinders	
Type	John Deere heat-treated, chrome-plated polished cylinder rods, hardened steel (replaceable bushings) pivot pins
Electrical	
Voltage	12 volt
Battery Capacity	750 CCA standard / 925 CCA with optional cold weather start package
Alternator Rating	70 amp with no air conditioning (A/C) / 90 amp with A/C
Lights	
Standard	Halogen: 2 front and 1 rear
Deluxe	LED: 2 front, 2 side, and 1 rear
Operator's Station	
ROPS (ISO 3471) / FOPS (ISO 3449) structure with quick pivot standard	
Tires/Wheels	
Standard Tire Size	10 x 16.5
Serviceability	
Refill Capacity	
Fuel Tank	71 L (19 gal.)
Operating Weight	
Base Machine	2970 kg (6,542 lb.)
Machine Dimensions	
A Length Without Bucket	2.63 m (103.0 in.) (8 ft. 7 in.)
B Length With Foundry Bucket	3.24 m (127.6 in.) (10 ft. 8 in.)
C Width Without Bucket	1.60 m (62.9 in.) (5 ft. 3 in.)
D Height to Top of ROPS	1.96 m (77.2 in.) (6 ft. 5 in.)
E Height to Hinge Pin	3.05 m (120.0 in.) (10 ft. 0 in.)
F Dump Height With Foundry Bucket	2.40 m (94.3 in.) (7 ft. 10 in.)
G Dump Reach	
With Foundry Bucket	0.86 m (34.0 in.)
With Construction Bucket	1.05 m (41.3 in.) (3 ft. 5 in.)
H Wheelbase	1.05 m (41.5 in.) (3 ft. 5 in.)
I Ground Clearance	0.18 m (7.0 in.)
J Angle of Departure	22.3 deg.
K Front Turn Radius With Foundry Bucket	2.01 m (79.0 in.) (6 ft. 7 in.)
L Dump Angle (full lift height)	42 deg.
M Bucket Rollback (ground level)	30 deg.

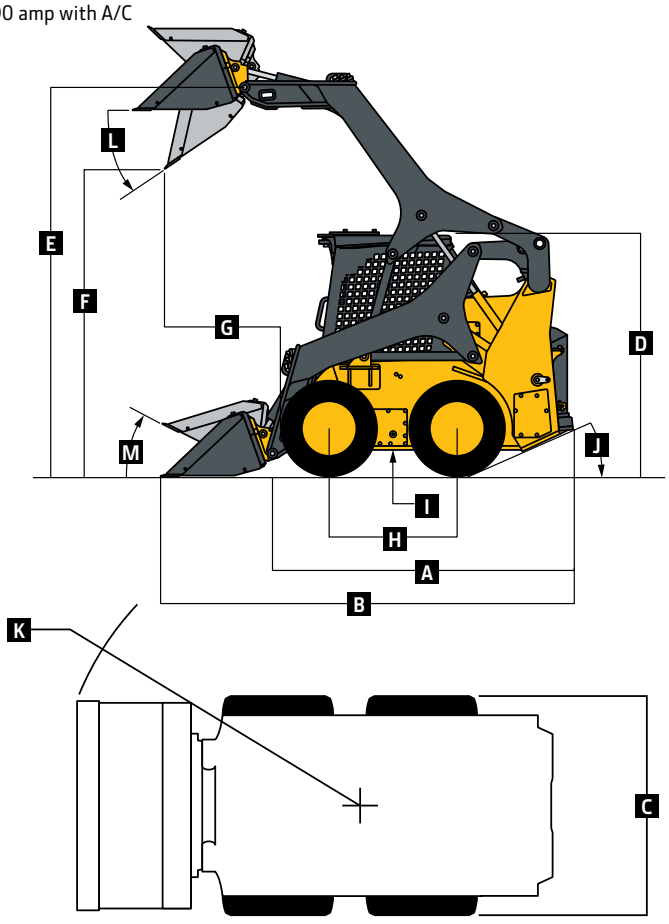

While general information, pictures, and descriptions are provided, some illustrations and text may include product options and accessories NOT AVAILABLE in all regions, and in some countries products and accessories may require modifications or additions to ensure compliance with the local regulations of those countries.

Loader Performance	318G		
Tipping Load	1766 kg (3,890 lb.)	Boom Breakout Force *(continued)*	
SAE Rated Operating Capacity	883 kg (1,945 lb.)	With Construction Bucket	2270 kg (5,000 lb.)
With Counterweight	951 kg (2,095 lb.)	Bucket Breakout Force	
Boom Breakout Force		With Foundry Bucket	2724 kg (6,000 lb.)
With Foundry Bucket	2384 kg (5,250 lb.)	With Construction Bucket	1930 kg (4,250 lb.)

Additional equipment

Key: ● Standard ▲ Optional or special — See your John Deere dealer for further information.

318G	Engine
●	Meets EPA Final Tier 4/EU Stage IV emissions
●	Yanmar 4TNV86CHT
●	Auto-idle
●	Automatic preheat
●	Electronic injection system
▲	Engine air precleaner kit
●	Fuel tank, 71 L (19 gal.)
●	John Deere COOL-GARD™ II Extended-Life Engine Coolant
●	John Deere Plus-50™ II 0W40 initial engine oil fill*
●	4-cylinder 48.5 kW (65 gross hp)/45.6 kW (61 net hp), 2.1-L (128 cu. in.) displacement
●	5-micron primary fuel filter and water separator
▲	Cold-weather starting package with 925-CCA battery
	Cooling System
●	Coolant overflow bottle recovery tank
●	Direct belt-drive cooling fan system
●	No-tools-required swing-out oil cooler
	Powertrain
●	High-strength adjustment-free final-drive chains
●	Automatic spring-applied hydraulically released wet-disc park brake
●	Transmission, single speed
▲	Transmission, 2 speed
	Hydraulic System
●	John Deere heat-treated, chrome-plated cylinder rods with replaceable bushings
▲	Connect-under-pressure auxiliary couplers
●	Quick-check hydraulic fluid-level sight glass
●	1,000-hour, 5-micron hydraulic filter
●	Axial-piston hydrostatic pump
	Electrical
●	Automatic engine/hydraulic shutdown protection system
●	Auxiliary hydraulics operator-presence system
●	Courtesy lighting

318G	Electrical *(continued)*
●	Deluxe instrumentation EMU with: Operator-selectable monitoring – Hour meter, engine rpm, battery voltage, diagnostics, EMU configuration, engine coolant temperature, hydraulic oil temperature / LED warning indicators – Glow plug, seat switch, seat belt, door open, auxiliary hydraulics, park brake engaged, 2-speed engaged, stop, low engine oil pressure, engine coolant over-temperature, battery not charging, air filter restriction, hydraulic filter restriction
▲	Deluxe LED lighting package with additional side lights (2), front lights (2), and rear light (1)
●	Front and rear halogen work lights
●	Triple-interlock operator-presence control system
●	Backup alarm
●	Battery, 750 CCA
●	Horn
	Operator's Station
●	Deluxe cab headliner
▲	Keyless-start sealed-switch module with integrated anti-theft system
●	Pull-down adjustable lap bar
●	Quick-pivot ROPS
●	Rear window
●	Top window
●	Removable top window
▲	Vinyl cab enclosure
▲	Glass cab enclosure
▲	Sliding/locking/removable glass side windows
●	ROPS/FOPS operator structure
●	Seat belt, 51-mm (2-in.), retractable
▲	Seat belt, 76-mm (3-in.), retractable
▲	Shoulder belt
●	Water-shedding deluxe vinyl seat
▲	Air-ride cloth, heated seat
▲	Air-ride vinyl seat
●	12-volt power port / Dome light / Cargo storage / Beverage holder

318G	Operator's Station *(continued)*
▲	Air conditioning with heater/defroster
▲	AM/FM radio with Bluetooth® for audio streaming
●	Electrohydraulic (EH) ISO-pattern joystick controls
▲	EH joystick performance package: Switchable ISO-H pattern / Creeper mode / Boom/bucket speed settings / Adjustable propel settings / Attachment controls
▲	Floor mat with left footrest
●	Rearview mirror
▲	Boom-mounted side mirrors
▲	Rearview camera
	Loader
●	In-cab boom lockout to secure loader before exiting seat
●	John Deere Quik-Tatch™
▲	Power Quik-Tatch
●	John Deere vertical-lift boom
▲	Hydraulic self-leveling on/off
▲	Ride control
	Other
●	Convenient front (1) and rear (2) tie-downs
●	Environmental drains for all fluid reservoirs
▲	10 x 16.5 10 PR Galaxy "Beefy Baby III" heavy-duty (HD) tires for 1.52-m (60 in.) machine width
▲	Tire options: SKS Xtra Wall, Galaxy Beefy Baby III, Galaxy Hulk, and Brawler Solid-Flex
▲	Chrome exhaust stack
▲	Rear counterweights (2), 45.36 kg (100 lb.)
▲	Single-point lift kit
▲	SMV sign kit
▲	JDLink™ wireless communication system (available in specific countries; see your dealer for details)

**500-hour engine oil-change intervals when John Deere Plus-50 II oil and John Deere oil filter are used.*

While general information, pictures, and descriptions are provided, some illustrations and text may include product options and accessories NOT AVAILABLE in all regions, and in some countries products and accessories may require modifications or additions to ensure compliance with the local regulations of those countries.

Net engine power is with standard equipment including air cleaner, exhaust system, alternator, and cooling fan, at standard conditions per SAE J1349 and DIN 6270B, using No. 2-D fuel at 35 API gravity. Gross power is without cooling fan. No derating is required up to 3050-m (10,000 ft.) altitude. Specifications and design subject to change without notice.Wherever applicable, specifications are in accordance with SAE standards. Except where otherwise noted, these specifications are based on a unit with standard equipment, full fuel tank, and 79-kg (175-lb.) operator.



DKAGSS318 (24-03)

JOHN DEERE