J SERIES-II

CRAWLER DOZERS

JOHN DEERE

700J-II / 750J-II / 850J-II



SIMPLY ADVANCED


RELIABLE
+
PRODUCTIVE


POWER. CONTROL.
PERFORMANCE.



BUILT TO DO ONE JOB EXTREMELY WELL — YOURS.

Designed using the same kind of forward thinking as our first hydrostatic (HST) dozer more than 35 years ago, our popular 700J-II, 750J-II, and 850J-II Dozers continue to define the way earthwork gets done. These models include features like improved variable-speed HST drive motors and Eco mode for maximized fuel economy in your toughest applications. And the 850J-II is available with a proven EU Stage IIIA and Brazil MAR-I engine for more powerful emission-certified efficiency.

TAKE CHARGE

IMAGINE THE POSSIBILITIES.

Power turns, power management, infinite speed control — we introduced them all. And these redesigned J Series-II Dozers have been reloaded with even more productivity- and uptime-boosting enhancements. So you can get more done, more powerfully, for less.

ECO MODE REDUCES FUEL CONSUMPTION BY UP TO 20%

Transmission upgrade

Updated variable-speed HST drive motors and John Deere transmission control unit (TCU) software help push production and fuel savings to new levels.

PAT spill sheets

Spill sheets are a standard feature to 750J-II and 850J-II power/angle/tilt (PAT) blades, for better material retention. They're also an available option for the 700J-II.

Enhanced blade options

Blade options have been expanded on the 700J-II to include 126- and 144-inch PAT offerings, flexibly boosting jobsite productivity.

Save fuel with Eco mode

Eco mode regulates engine rpm and HST transmission to burn up to 20-percent less fuel in a variety of applications.

More powerful engines

Stage IIIA and MAR-I diesels deliver up to 10-percent more horsepower, along with more impressive power-to-weight ratio, available torque, and drawbar pull than previous models.



MORE POWER, LESS STRESS



MAXIMIZE PRODUCTIVITY
WITH MINIMAL EFFORT.

All dozers move earth. But if you want one that does more with a lot less effort, you'll choose a John Deere J Series-II. Reliable electronic controls put you in complete command of a full arsenal of hydrostatic (HST) advantages, including power turns, counter-rotation, and infinitely variable travel speeds. Plus Total Machine Control (TMC) lets an operator customize decelerator mode and response, forward/reverse ground-speed ranges, steering modulation, F-N-R shift rate, and forward/reverse speed ratios, for commanding control.

Increased horsepower

Stage IIIA and MAR-I engine delivers up to 10-percent more horsepower* than previous models. Power-to-weight ratio and available torque and drawbar pull are also more impressive for all J Series-II models.

**Nine percent on the 700J-II; seven percent on the 750J-II; 10 percent on the 850J-II (percentage varies by model configuration).*

Full-power turns

Independent track control speeds up or slows down each side — for smooth, full-power turns. Automatic 10-percent power boost helps carry more material in a turn.

Smooth blade control

Low-effort controls command the blade and fully modulated HST drivetrain, for reliably predictable response with smooth starts and direction changes.



Power management

Simply set the maximum desired ground speed, and the power-management system automatically maintains peak engine rpm and power efficiency without stalling or shifting.

Counter-rotation

Overcome heavy corner loads and quickly reposition the blade on the go with productivity-boosting counter-rotation. Also provides space-saving spot turns.

Variable travel speed

Infinitely variable range to 6.8 mph on the 750J-II and 850J-II, and to 6.0 mph on the 700J-II, matches ground speed to the load. Travel can also be varied to fit specific applications, terrain, or operating preferences — and even limited to maximize undercarriage life.



AT HOME IN THE CAB

WELCOME TO THE COMFORT ZONE.

Want to boost operator efficiency? Put them in the seat of this spacious air-conditioned modular cab. From ergonomically designed, fully customizable controls to extended visibility, J Series-II Dozers are loaded with everything your operators need to keep calm, cool, and comfortably productive.



360° LIGHT PACKAGE EXTENDS ILLUMINATION

Take it easy

Ergonomically correct joystick provides intuitive, low-effort control of steering, ground speed, and forward/reverse travel. Detented design employs a thumb-actuated travel-speed switch so it doesn't require an operator's constant touch or attention.

Better blade response

Generous hydraulic flow and precise metering enable powerfully quick blade response, with a natural "feel" to help maximize grading skills. A thumb-actuated switch provides low-effort angle control.

Safety first

Retractable seat belt, slip-resistant floor mat, convenient grab bars, bypass start protection, automatic park brake, convenient handholds, and slip-resistant steps all help keep operators out of harm's way.

Visible stability

Cab-forward design delivers a more stable ride and a commanding view behind, below, and beyond the blade. Visibility to the side and rear are expansively clear.

Interactive display

Advanced in-cab monitor keeps a vigilant watch on vital machine functions and issues visual and audible warnings. Easy-to-understand messages enable quick, easy troubleshooting.

Cool and collected

Automotive-style directional vents deliver effective airflow to keep the glass clear and the cab comfortable. Air conditioning is standard on all cabs.

Let there be light

High-intensity LED lights are standard. Opt for the factory-installed 360-degree light package with two additional front LED and two halogen rear lights to extend your workday beyond normal daylight hours.









MORE THAN TOUGH ENOUGH.

NO PROBLEM

KEEP COOL AND BURN LESS FUEL.

Designed to run cool regardless of what's in the air or underfoot, the highly effective cooling system on the 750J-II and 850J-II employs a variable-speed, hydraulic-driven suction fan that operates only as needed for maximum power and efficiency (the 700J-II features a rugged blower-type cooling fan). For work in environments with airborne debris, an optional reversing fan on the 750J-II and 850J-II automatically back-blows contaminants from cooler cores and side screens. So you can work long and hard without breaking a sweat.



Improved fuel economy

Eco mode modulates engine power and transmission output, conserving fuel across a wide range of jobsite tasks.

Impact resistance

No need for elevated sprockets. Heavy-duty double-reduction planetary final drives are mounted independent of the track frames, where they're effectively protected from shock loads.

Expanded blade options

700J-II blade offerings now include choice of power/angle/tilt (PAT) in 126 and 144 inches. Blade hoses on all J Series-II models are steel-cable supported and Cordura® covered, for extra protection.

Proven blade design

PAT dozer's closed-cell blade design and box-section C-frame deliver exceptional strength and durability. Outside dozer (OSD)-mounted push beams are equally durable.

Durable construction

One-piece welded mainframe, Dura-Trax™ undercarriage, wet-sleeve engine liners, O-ring face-seal hose couplers, and isolated planetary final drives help durably extend component wear life.

PAT spill sheets

Spill sheets on PAT blades — standard on the 750J-II and 850J-II, optional on the 700J-II — better retain material and deliver full loads to their destination.

GRADE CONTROL

FOR MORE CONTROL.

Yours isn't just any operation. Why settle for just any crawler? Choose a J Series-II Dozer in standard, long-track, extra-long-track, wide-long-track, and low-ground-pressure configurations with inside-mounted power/angle/tilt (PAT) or outside dozer (OSD)-mounted straight or semi-U blades. These versatile machines can also be equipped with a variety of special-duty and severe-application packages to tackle tasks that many other crawlers can't. Ask your dealer for details.

Gradeability

Choose the blade that's best for your kind of work. Purpose-built mainframes allow optimized component placement — for uncompromised grading ability, regardless of which configuration you choose.

SC-2™-coated bushings

Available extended life tracks deliver twice the bushing life, for extra durability in extremely abrasive conditions. If you're looking to further reduce maintenance and operating costs, the SC-2 option might be for you.

Get good grades

John Deere J Series-II Dozers are ready for grade-control technology so you can be ready to get good grades on a wide range of jobsites.

Attachment compatibility

Highly adaptable J Series-II drivetrain makes these dozers ideal for work with rear-mount attachments such as rippers and cable plows.









SMOOTH OPERATOR

SIMPLIFIED MAINTENANCE

UNCOVER LOWER OPERATING COSTS.

Convenient fluid changes

Convenient maintenance access and same-side daily servicing, with 500-hour engine oil and 2,000-hour hydraulic and transmission fluid intervals, keep these dozers on the job. Common oils help make refills less complicated.

Save time *and* money

Other service-friendly features include an easy-to-clean undercarriage, quick-to-replace hydraulic hoses, and designed-in diagnostics, to list a favorite few.

Accessible components

Operator station tilts a full 70 degrees in only minutes, for wide-open access to internal components — no need to disconnect linkages, hydraulics, or wiring. Hinged side shields enable ground-level access to dipsticks; fill tubes; batteries; master electrical shutoff; and engine, transmission, and hydraulic filters.

Easy periodic service

Fluid sample ports and remote drive-system test ports simplify preventative maintenance and troubleshooting. Easy-to-locate and -read sight gauges provide fluid levels at a glance. Convenient lube chart helps confirm that nothing gets overlooked.



Get valuable insight with

PRECISION CONSTRUCTION

This suite of construction technology delivers **Productivity Solutions** to help you get more done, more efficiently. In-base JDLink™ connectivity provides machine location, utilization data, and alerts to help you maximize productivity and efficiency. Other productivity solutions include grade-management options for multiple machine forms and payload weighing for wheel loaders and articulated dump trucks.

To maximize uptime and lower costs, JDLink also enables **John Deere Connected Support™.** John Deere's centralized Machine Health Monitoring Center analyzes data from thousands of connected machines, identifies trends and develops recommended actions, called Expert Alerts, to help prevent downtime. Dealers use Expert Alerts to proactively address conditions that may otherwise likely lead to downtime. Your dealer can also monitor machine health and leverage remote diagnostics and programming capability to further diagnose problems and even update machine software without a time-consuming trip to the jobsite.





700J-II SPECIFICATIONS

While general information, pictures, and descriptions are provided, some illustrations and text may include product options and accessories NOT AVAILABLE in all regions, and in some countries products and accessories may require modifications or additions to ensure compliance with the local regulations of those countries.

Engine	**700J-II XLT / 700J-II LGP**
Blade Type	***Power/Angle/Tilt (PAT)***
Manufacturer and Model	John Deere PowerTech™ E 6068
Non-Road Emission Standard	EU Stage IIIA and Brazil MAR-I emissions
Cylinders	6
Displacement	6.8 L (414 cu. in.)
SAE Net Rated Power	93 kW (125 hp) at 1,800 rpm
Net Peak Torque	549 Nm (405 lb.-ft.) at 1,500 rpm
Aspiration	Turbocharger and air-to-air aftercooler
Lubrication	Pressure system with full-flow spin-on filter and oil-to-water cooler
Air Cleaner	Dual-stage dry type with safety element, precleaner, and under-hood restriction indicator
Slope Operation, Maximum Angle	45 deg. fore-aft / 30 deg. side slope
Cooling	
Type	Blower-type cooling fan
Engine Coolant Rating	–37 deg. C. (–34 deg. F)
Powertrain	
Transmission	Automatic, dual-path, hydrostatic (HST) drive; load-sensing feature automatically adjusts speed and power to match changing load conditions; each individually controlled track is powered by a variable-displacement piston pump and motor combination; ground-speed selection buttons on single-lever steering and direction control; independently selectable reverse speed ratios of 100%, 115%, or 130% of forward ground speed; decelerator pedal controls ground speed to stop
System Relief Pressure	45 850 kPa (6,650 psi)
Travel Speeds	
Forward and Reverse	8.9 km/h (5.5 mph)
Maximum (optional)	9.7 km/h (6.0 mph)
Steering	Single-lever steering, speed, direction control, and counter-rotation; full power turns and infinitely variable track speeds provide unlimited maneuverability and optimum control; HST steering eliminates steering clutches and brakes
Final Drives	Heavy-duty triple-reduction final drives attached directly to mainframes and isolated from track frame and dozer frame loads
Total Ratio	33.59 to 1
Drawbar Pull	
Maximum	200 kN (45,000 lb.)
At 1.9 km/h (1.2 mph)	114.3 kN (25,700 lb.)
At 3.2 km/h (2.0 mph)	73 kN (16,400 lb.)
Brakes	
Service	HST (dynamic) braking stops machine when the direction/steering control lever is moved to neutral or the decelerator is depressed to the end of travel
Parking	Exclusive safety feature engages wet, multiple-disc brakes whenever the engine stops, the decelerator is depressed to the end of travel, or the park-lock lever is placed in the start or neutral positions and motion is detected; machine cannot be driven with brake applied, reducing wear-out or need for adjustment; spring-applied hydraulic release

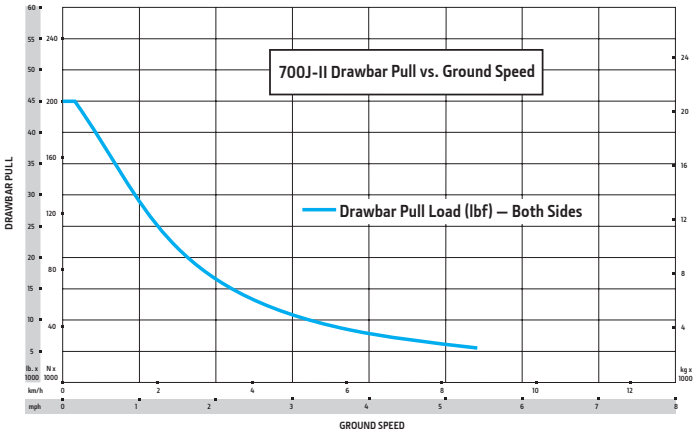

700J-II SPECIFICATIONS



While general information, pictures, and descriptions are provided, some illustrations and text may include product options and accessories NOT AVAILABLE in all regions, and in some countries products and accessories may require modifications or additions to ensure compliance with the local regulations of those countries.

Hydraulics	**700J-II XLT / 700J-II LGP**	
Blade Type	***PAT***	
Type	Open-center hydraulic system with fixed-displacement gear pump	
Pump, 74-cc	95 L/m (25 gpm)	
System Relief Pressure	22 063 kPa (3,200 psi)	
Maximum Flow at Unloaded High Idle	95 L/m (25 gpm)	
Control	3-function hydraulic valve with low-effort single-lever T bar	
Cooling	Convective oil sump	
Cylinders		
Type	Heat-treated, chrome-plated, polished cylinder rods; hardened steel (replaceable bushings) pivot pins	
Electrical		
Voltage	24 volts	
Capacity		
Battery	950 CCA	
Reserve	190 min.	
Alternator Rating	55 amp	
Lights	Grille mounted (2), rear mounted (1), and rear reflectors (2)	
Undercarriage	**700J-II XLT**	**700J-II LGP**
Tracks	Track frame with front and rear track guides and sprocket guard; John Deere Dura-Trax™ features deep-heat-treated, sealed, and lubricated track links and through-hardened, sealed, and lubricated rollers for maximum wear resistance; sprockets are segmented; extreme-duty shoes are available (on some models) for severe applications	
Track Gauge, Standard	1778 mm (70 in.)	1981 mm (78 in.)
Grouser Width, Closed Center, Single Bar	560 mm (22 in.)	760 mm (30 in.)
Chain	Sealed and lubricated	Sealed and lubricated
Shoes, Each Side	39	39
Track Rollers, Single Flange, Each Side	7	7
Track Length on Ground	2616 mm (103 in.)	2616 mm (103 in.)
Ground Contact Area	29 239 cm^2 (4,532 sq. in.)	39 871 cm^2 (6,180 sq. in.)
Ground Pressure, Outside Dozer (OSD)	41.4 kPa (6.0 psi)	31.7 kPa (4.6 psi)
Track Pitch	191 mm (7.5 in.)	191 mm (7.5 in.)
Blades		
Straight end bits included in weights.		
Blade Type	***PAT***	***PAT***
Weight	804 kg (1,771 lb.)	901 kg (1,986 lb.)
Length	3200 mm (126 in. / 10 ft. 6 in.)	3658 mm (144 in. / 12 ft. 0 in.)
Capacity	2.7 m^3 (3.6 cu. yd.)	3.2 m^3 (4.1 cu. yd.)
Operator Station	**700J-II XLT / 700J-II LGP**	
ROPS (ISO 3471 – 2008) and FOPS (ISO 3449 – 2005)		
Serviceability		
Refill Capacities		
Fuel Tank With Lockable Cap	227 L (60 gal.)	
Cooling System With Recovery Tank	21.2 L (5.6 gal.)	
Engine Oil With Filter	19 L (20 qt.)	
Reservoir With Filter		
Transmission	65.1 L (17.2 gal.)	
Hydraulic	51.1 L (13.5 gal.)	
Final Drive	10.9 L (11.5 qt.)	

While general information, pictures, and descriptions are provided, some illustrations and text may include product options and accessories NOT AVAILABLE in all regions, and in some countries products and accessories may require modifications or additions to ensure compliance with the local regulations of those countries.

Operating Weights	700J-II XLT	700J-II LGP
Blade Type	***PAT***	***PAT***
With standard equipment, cab, rear ripper, full fuel tank, and 79-kg (175 lb.) operator	14 035 kg (30,942 lb.)	14 615 kg (32,221 lb.)
Optional Components		
Maximum Life Undercarriage	355 kg (782 lb.)	355 kg (782 lb.)
Track Shoes		
560-mm (22 in.) Moderate Duty	In base*	–493 kg (–1,086 lb.)
760-mm (30 in.) Moderate Duty	—	In base*
Cab With Heater/Air Conditioner	288 kg (635 lb.)	288 kg (635 lb.)
Deluxe Seat Group	9 kg (20 lb.)	9 kg (20 lb.)
Heater (ROPS canopy)	12 kg (26 lb.)	12 kg (26 lb.)
Rock Guards (4)	130 kg (287 lb.)	—
Retrieval Hitch	31 kg (68 lb.)	31 kg (68 lb.)
Drawbar, Extended Rigid	88 kg (195 lb.)	88 kg (195 lb.)
ROPS Canopy		
Front and Door Screens	54 kg (120 lb.)	54 kg (120 lb.)
Rear Screen	20 kg (45 lb.)	20 kg (45 lb.)
Side Screens	49 kg (108 lb.)	49 kg (108 lb.)
Cab With Air Conditioner		
Front and Door Screens	68 kg (151 lb.)	68 kg (151 lb.)
Rear Screen	41 kg (91 lb.)	41 kg (91 lb.)
Side Screens	49 kg (108 lb.)	49 kg (108 lb.)
Limb Risers (ROPS canopy and cab)	155 kg (341 lb.)	155 kg (341 lb.)
Tank Guard	102 kg (225 lb.)	102 kg (225 lb.)
Front Counterweights (each)	172 kg (380 lb.)	172 kg (380 lb.)
Work Lights, High Intensity	4 kg (9 lb.)	4 kg (9 lb.)
Front Tow Hook	8 kg (17 lb.)	8 kg (17 lb.)
4000S Winch	652 kg (1,437 lb.)	652 kg (1,437 lb.)
Fairlead, 4 Roller	85 kg (187 lb.)	85 kg (187 lb.)
Heavy-Duty C Frame (less blade)	–785 kg (–1,730 lb.)	–785 kg (–1,730 lb.)
Fuel-Fired Coolant Heater	5 kg (12 lb.)	5 kg (12 lb.)
Extreme-Service Air-Conditioning Module Guard	51 kg (112 lb.)	51 kg (112 lb.)
Log Arch	354 kg (780 lb.)	354 kg (780 lb.)

**Included in SAE operating weight.*

Machine Dimensions	700J-II XLT / 700J-II LGP
A Overall Height to Roof	3007 mm (118 in. / 9 ft. 10 in.)
Overall Height to Exhaust Stack	3020 mm (119 in. / 9 ft. 11 in.)
B Overall Length	4775 mm (188 in. / 15 ft. 8 in.)
C Tread Depth With Single-Bar Grouser (excludes grouser height)	
Moderate Duty	56 mm (2.2 in.)
Extreme Duty	68 mm (2.7 in.)
D Ground Clearance With Grousers	391 mm (15.4 in.)

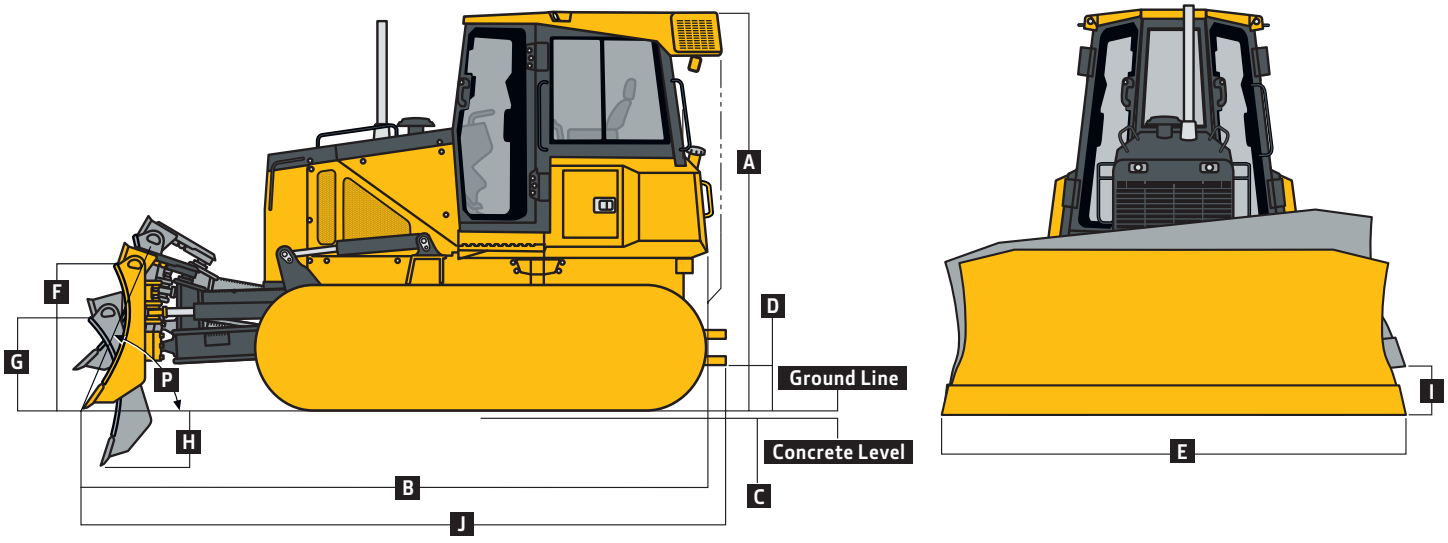

While general information, pictures, and descriptions are provided, some illustrations and text may include product options and accessories NOT AVAILABLE in all regions, and in some countries products and accessories may require modifications or additions to ensure compliance with the local regulations of those countries.

Machine Dimensions *(continued)*	700J-II XLT	700J-II LGP
Blade Type	***PAT***	***PAT***
E Blade Width	3200 mm (126 in. / 10 ft. 6 in.)	3658 mm (144 in. / 12 ft. 0 in.)
F Blade Height	991 mm (39 in. / 3 ft. 3 in.)	991 mm (39 in. / 3 ft. 3 in.)
G Blade Lift Height	991 mm (39 in. / 3 ft. 3 in.)	991 mm (39 in. / 3 ft. 3 in.)
H Blade Digging Depth	533 mm (21 in.)	533 mm (21 in.)
I Blade Tilt (uses tilt jack)	445 mm (17.5 in.)	482 mm (19 in.)
J Overall Length With Blade and Extended Drawbar	5080 mm (200 in. / 16 ft. 8 in.)	5080 mm (200 in. / 16 ft. 8 in.)
K Overall Length With Winch	5469 mm (215 in. / 17 ft. 11 in.)	5469 mm (215 in. / 17 ft. 11 in.)
Overall Width With Blade Angled	3020 mm (118.9 in. / 9 ft. 10.9 in.)	3631 mm (142.9 in. / 11 ft. 10.9 in.)
L Blade Angle	25 deg.	25 deg.
M Cut Reach	25 mm (1 in.)	–25 mm (–1 in.)
N Width Over Track	2337 mm (92 in. / 7 ft. 8 in.)	2743 mm (108 in. / 9 ft. 0 in.)
O Cast Reach	381 mm (15 in.)	330 mm (13 in.)
P Cutting-Edge Angle, Adjustable	7 deg.	7 deg.
Q Angled Width	2769 mm (109 in. / 9 ft. 1 in.)	3073 mm (121 in. / 10 ft. 1 in.)
R 4000S Winch Length	775 mm (30.5 in.)	775 mm (30.5 in.)

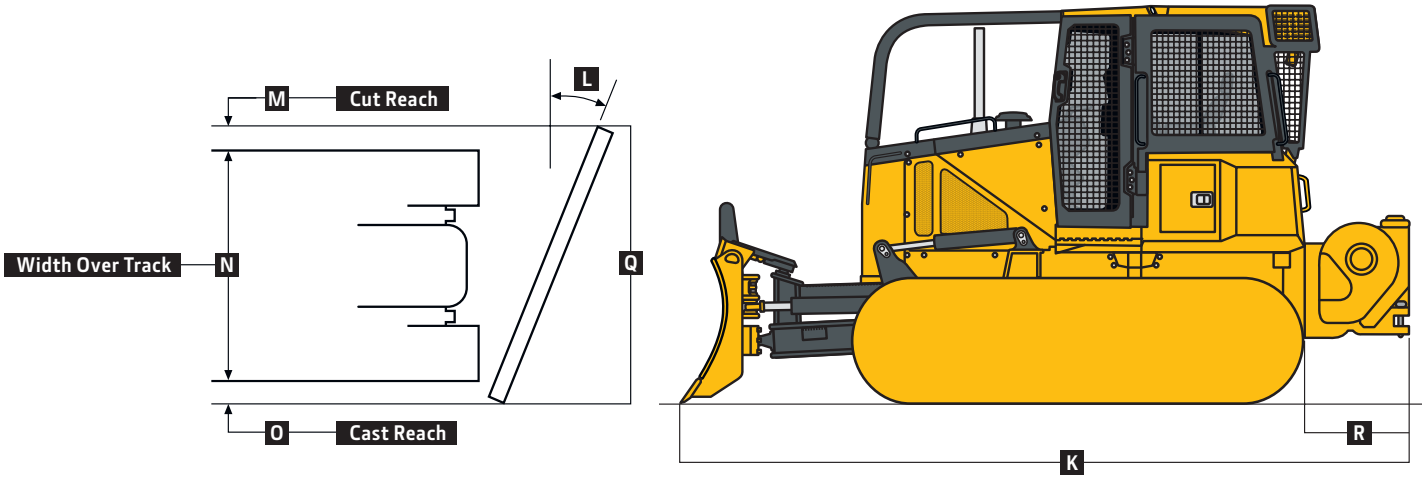

Rear Ripper	700J-II XLT / 700J-II LGP
Multi-shank (3) parallelogram ripper with hydraulic pitch adjustment and ESCO® ripper tips	
Weight	1444 kg (3,183 lb.)
S Maximum Penetration	563 mm (22.2 in.)
T Maximum Clearance Under Tip	584 mm (23 in.)
U Overall Length (lowered position)	1494 mm (58.8 in.)
U^{I} Overall Length (raised position)	1210 mm (47.6 in.)
V Overall Beam Width	1930 mm (76 in.)
W Slope Angle (full raise)	26 deg.
X Ripping Width	1673 mm (65.9 in.)
Y Distance Between Shanks	806 mm (31.7 in.)
Distance Between Holes in Shank	105 mm (4.1 in.)

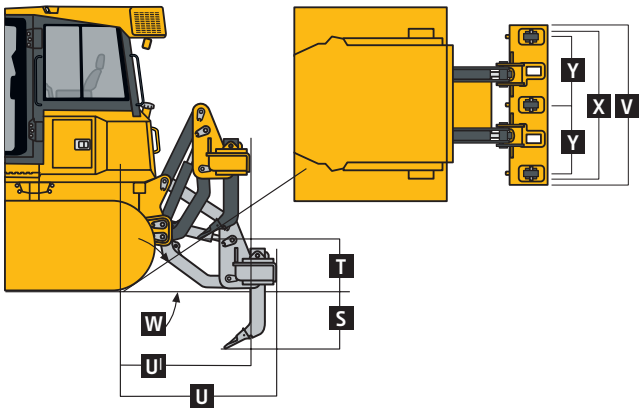



750J-II SPECIFICATIONS

While general information, pictures, and descriptions are provided, some illustrations and text may include product options and accessories NOT AVAILABLE in all regions, and in some countries products and accessories may require modifications or additions to ensure compliance with the local regulations of those countries.

Engine	***750J-II w/ Outside Dozer (OSD) Blade / 750J-II LT / 750J-II LGP w/ Power/Angle/Tilt (PAT) Blade***
Manufacturer and Model	John Deere PowerTech™ E 6068
Non-Road Emission Standard	EU Stage IIIA and Brazil MAR-I
Cylinders	6
Displacement	6.8 L (414 cu. in.)
SAE Net Rated Power	116 kW (155 hp) at 2,100 rpm
Net Peak Torque	745 Nm (550 lb.-ft.) at 1,500 rpm
Aspiration	Turbocharger and air-to-air aftercooler
Lubrication	Pressure system with full-flow spin-on filter and oil-to-water cooler
Air Cleaner	Dual-stage dry type with safety element, precleaner, and under-hood restriction indicator
Slope Operation, Maximum Angle	45 deg. fore-aft / 30 deg. side slope
Cooling	
Type	Variable-speed suction fan
Engine Coolant Rating	–37 deg. C. (–34 deg. F)
Powertrain	
Transmission	Automatic, dual-path, hydrostatic (HST) drive; load-sensing feature automatically adjusts speed and power to match changing load conditions; each individually controlled track is powered by a variable-displacement piston pump and motor combination; ground-speed selection buttons on single-lever steering and direction control; independently selectable reverse speed ratios of 100% ,115%, or 130% of forward ground speed; decelerator pedal controls ground speed to stop
System Relief Pressure	45 850 kPa (6,650 psi)
Travel Speeds	
Forward and Reverse	9.7 km/h (6.0 mph)
Maximum (optional)	10.9 km/h (6.8 mph)
Steering	Single-lever steering, speed, direction control, and counter-rotation; full power turns and infinitely variable track speeds provide unlimited maneuverability and optimum control; HST steering eliminates steering clutches and brakes
Final Drives	Double-reduction, planetary final drives transfer torque loads over 3 gear sets; mounted independently of track frames and dozer push frames for isolation from shock loads
Total Ratio	46.4 to 1
Drawbar Pull	
Maximum	244.6 kN (55,000 lb.)
At 1.9 km/h (1.2 mph)	146.8 kN (33,000 lb.)
At 3.2 km/h (2.0 mph)	97.9 kN (22,000 lb.)
Brakes	Decelerator/brake pedal; automatic power management with manual override for matching ground speed
Service	HST (dynamic) braking stops machine when the direction/steering control lever is moved to neutral or the decelerator is depressed to the end of travel
Type	Hydraulic
Parking	Exclusive safety feature engages wet, multiple-disc brakes whenever the engine stops, the decelerator is depressed to the end of travel, or the park-lock lever is placed in the start or neutral positions and motion is detected; machine cannot be driven with brake applied, reducing wear-out or need for adjustment; spring-applied hydraulic release
Hydraulics	
Type	Load-sense, piston pump
Pump, 74-cc	144 L/m (38 gpm)
System Relief Pressure	24 993 kPa (3,625 psi)
Differential Pressure	1896 kPa (275 psi)

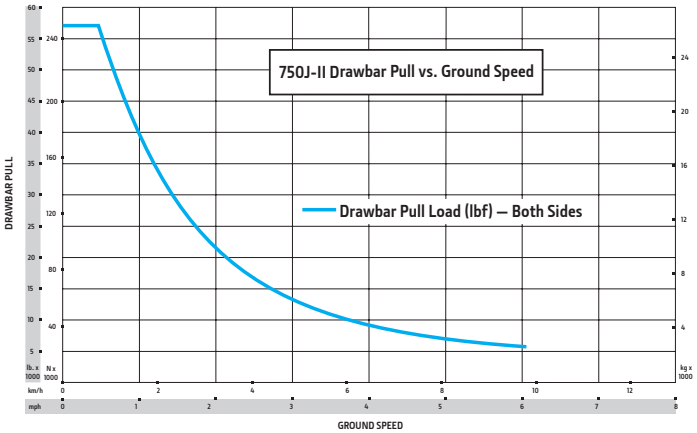

750J-II SPECIFICATIONS



While general information, pictures, and descriptions are provided, some illustrations and text may include product options and accessories NOT AVAILABLE in all regions, and in some countries products and accessories may require modifications or additions to ensure compliance with the local regulations of those countries.

Hydraulics *(continued)*	**750J-II / 750J-II LT / 750J-II LGP**		
Maximum Flow at Unloaded High Idle	140 L/m (37 gpm)		
Control	T-bar hydraulic-pilot 2-function joystick with push-button angle function		
Cooling	Convective oil sump		
Cylinders			
Type	Heat-treated, chrome-plated, polished cylinder rods; hardened steel (replaceable bushings) pivot pins		
Electrical			
Voltage	24 volts		
Capacity			
Battery	950 CCA		
Reserve	190 min.		
Alternator Rating			
Cab	80 amp		
Canopy	55 amp		
Lights	Grille mounted (2), rear mounted (1), and rear reflectors (2)		
Undercarriage	**750J-II**	**750J-II LT**	**750J-II LGP**
Blade Type	***OSD***	***PAT***	***PAT***
Tracks	Track frame with front and rear track guides and sprocket guard; John Deere Dura-Trax™ features deep-heat-treated, sealed, and lubricated track links and through-hardened, sealed, and lubricated rollers for maximum wear resistance; sprockets are segmented; extreme-duty shoes are available (on some models) for severe applications		
Track Gauge, Standard	1880 mm (74 in.)	1880 mm (74 in.)	2134 mm (84 in.)
Grouser Width, Closed Center, Single Bar	559 mm (22 in.)	559 mm (22 in.)	864 mm (34 in.)
Chain	Sealed and lubricated	Sealed and lubricated	Sealed and lubricated
Shoes, Each Side	40	45	45
Track Rollers, Single Flange, Each Side	7	8	8
Track Length on Ground	2591 mm (102 in.)	3073 mm (121 in.)	3073 mm (121 in.)
Ground Contact Area	28 955 cm^2 (4,488 sq. in.)	34 348 cm^2 (5,324 sq. in.)	53 084 cm^2 (8,228 sq. in.)
Ground Pressure, OSD	54.3 kPa (7.87 psi)	44.5 kPa (6.45 psi)	30.7 kPa (4.45 psi)
Track Pitch	191 mm (7.5 in.)	191 mm (7.5 in.)	191 mm (7.5 in.)
Oscillation at Front Roller	±110 mm (±4.3 in.)	±135 mm (±5.3 in.)	±127 mm (±5.0 in.)
Blades			
Straight end bits included in weights.			
Weight	1377 kg (3,035 lb.)	937 kg (2,066 lb.)	1081 kg (2,383 lb.)
Length	3251 mm (128 in.)	3295 mm (130 in.)	3962 mm (156 in.)
Capacity	4.30 m^3 (5.62 cu. yd.)	3.23 m^3 (4.23 cu. yd.)	3.81 m^3 (4.98 cu. yd.)
C-Frame Assembly Weight (without blade)	—	1318 kg (2,905 lb.)	1318 kg (2,905 lb.)
Push-Beam Assembly Weight (without blade)	1928 kg (4,250 lb.)	—	—
Operator Station	**750J-II / 750J-II LT / 750J-II LGP**		
ROPS (ISO 3471 – 2008) and FOPS (ISO 3449 – 2005)			
Serviceability	**750J-II**	**750J-II LT**	**750J-II LGP**
Refill Capacities			
Fuel Tank With Lockable Cap	371 L (98 gal.)	371 L (98 gal.)	371 L (98 gal.)
Cooling System With Recovery Tank	21.6 L (5.7 gal.)	21.6 L (5.7 gal.)	21.6 L (5.7 gal.)
Engine Oil With Filter	26 L (7 gal.)	26 L (7 gal.)	26 L (7 gal.)
Reservoir With Filter			
Transmission	106 L (28 gal.)	106 L (28 gal.)	106 L (28 gal.)
Hydraulic	106 L (28 gal.)	106 L (28 gal.)	106 L (28 gal.)
Final Drive (each)			
Inner	9.5 L (2.5 gal.)	9.5 L (2.5 gal.)	15.9 L (4.2 gal.)
Outer	15.1 L (4 gal.)	15.1 L (4 gal.)	15.1 L (4 gal.)

While general information, pictures, and descriptions are provided, some illustrations and text may include product options and accessories NOT AVAILABLE in all regions, and in some countries products and accessories may require modifications or additions to ensure compliance with the local regulations of those countries.

Operating Weights	750J-II	750J-II LT	750J-II LGP
Blade Type	***OSD***	***PAT***	***PAT***
With standard equipment, cab, rear ripper, full fuel tank, and 79-kg (175 lb.) operator	18 086 kg (39,873 lb.)	17 655 kg (38,923 lb.)	18 713 kg (41,255 lb.)
Optional Components			
Track Shoes			
610-mm (24 in.) Moderate Duty	In base*	In base*	—
610-mm (24 in.) Extreme Duty	257 kg (566 lb.)	289 kg (637 lb.)	—
865-mm (34 in.) Moderate Duty	—	—	In base*
Cab With Pressurizer and Heater/Air Conditioner	337 kg (743 lb.)	337 kg (743 lb.)	337 kg (743 lb.)
Heater (ROPS canopy)	39 kg (85 lb.)	39 kg (85 lb.)	39 kg (85 lb.)
Full-Length Rock Guard	174 kg (384 lb.)	154 kg (340 lb.)	154 kg (340 lb.)
Final Drive Seal Guard	70 kg (155 lb.)	70 kg (155 lb.)	70 kg (155 lb.)
Retrieval Hitch	37 kg (81 lb.)	37 kg (81 lb.)	37 kg (81 lb.)
Drawbar, Extended Rigid	130 kg (286 lb.)	130 kg (286 lb.)	130 kg (286 lb.)
Heavy-Duty Grille	28 kg (62 lb.)	28 kg (62 lb.)	28 kg (62 lb.)
ROPS Canopy			
Front and Door Screens	84 kg (186 lb.)	84 kg (186 lb.)	84 kg (186 lb.)
Rear Screen	23 kg (50 lb.)	23 kg (50 lb.)	23 kg (50 lb.)
Side Screens	44 kg (98 lb.)	44 kg (98 lb.)	44 kg (98 lb.)
Cab With Air Conditioner			
Front and Door Screens	79 kg (175 lb.)	79 kg (175 lb.)	79 kg (175 lb.)
Rear Screen	34 kg (75 lb.)	34 kg (75 lb.)	34 kg (75 lb.)
Side Screens	54 kg (120 lb.)	54 kg (120 lb.)	54 kg (120 lb.)
Condenser Guard	55 kg (121 lb.)	55 kg (121 lb.)	55 kg (121 lb.)
Limb Risers (ROPS canopy and cab)	261 kg (575 lb.)	261 kg (575 lb.)	261 kg (575 lb.)
Lift-Cylinder Guards	77 kg (170 lb.)	42 kg (93 lb.)	42 kg (93 lb.)
Blade Brush Guard	87 kg (192 lb.)	87 kg (192 lb.)	87 kg (192 lb.)
Tank Guard	323 kg (712 lb.)	323 kg (712 lb.)	323 kg (712 lb.)
Counterweight			
Front	249 kg (550 lb.)	249 kg (550 lb.)	249 kg (550 lb.)
Rear	327 kg (720 lb.)	327 kg (720 lb.)	327 kg (720 lb.)

**Included in SAE operating weight.*

Machine Dimensions			
A Overall Height to Roof	3099 mm (122 in. / 10 ft. 2 in.)	3099 mm (122 in. / 10 ft. 2 in.)	3099 mm (122 in. / 10 ft. 2 in.)
Overall Height to Exhaust Stack	3020 mm (119 in. / 9 ft. 11 in.)	3020 mm (119 in. / 9 ft. 11 in.)	3020 mm (119 in. / 9 ft. 11 in.)
B Tread Depth With Single-Bar Grouser			
Moderate Duty	56 mm (2.2 in.)	56 mm (2.2 in.)	56 mm (2.2 in.)
Extreme Duty	68 mm (2.7 in.)	68 mm (2.7 in.)	68 mm (2.7 in.)
C Ground Clearance With Grousers (excludes grouser height)	356 mm (14 in.)	356 mm (14 in.)	356 mm (14 in.)
D Blade Width	3251 mm (128 in. / 10 ft. 8 in.)	3296 mm (130 in. / 10 ft. 10 in.)	3962 mm (156 in. / 13 ft. 0 in.)
E Blade Height	1240 mm (49 in. / 4 ft. 1 in.)	1194 mm (47 in. / 3 ft. 11 in.)	1194 mm (47 in. / 3 ft. 11 in.)
F Blade Lift Height	1049 mm (41 in. / 3 ft. 5 in.)	1025 mm (40.3 in. / 3 ft. 4 in.)	1025 mm (40.3 in. / 3 ft. 4 in.)
G Blade Digging Depth	574 mm (23 in.)	650 mm (25.6 in.)	650 mm (25.6 in.)
H Blade Tilt (uses tilt jack)	711 mm (28 in.)	437 mm (17.2 in.)	524 mm (20.6 in.)
I Overall Length With Blade	5207 mm (205.0 in. / 17 ft. 1 in.)	5296 mm (208.5 in. / 17 ft. 4.5 in.)	5296 mm (208.5 in. / 17 ft. 4.5 in.)

While general information, pictures, and descriptions are provided, some illustrations and text may include product options and accessories NOT AVAILABLE in all regions, and in some countries products and accessories may require modifications or additions to ensure compliance with the local regulations of those countries.

Machine Dimensions *(continued)*	750J-II	750J-II LT	750J-II LGP
Blade Type	***OSD***	***PAT***	***PAT***
J Overall Width With Blade Angled	—	3020 mm (118.9 in. / 9 ft. 10.9 in.)	3631 mm (142.9 in. / 11 ft. 10.9 in.)
K Blade Angle	—	23.5 deg.	23.5 deg.
L Cut Reach	—	108 mm (4.3 in.)	84 mm (3.3 in.)
M Width Over Track	2438 mm (96 in. / 8 ft. 0 in.)	2489 mm (98 in. / 8 ft. 2 in.)	2794 mm (110 in. / 9 ft. 2 in.)
N Cast Reach	—	224 mm (8.8 in.)	297 mm (11.7 in.)
O Cutting Edge Angle	50.5–60 deg.	55.2–60.1 deg.	55.2–60.1 deg.

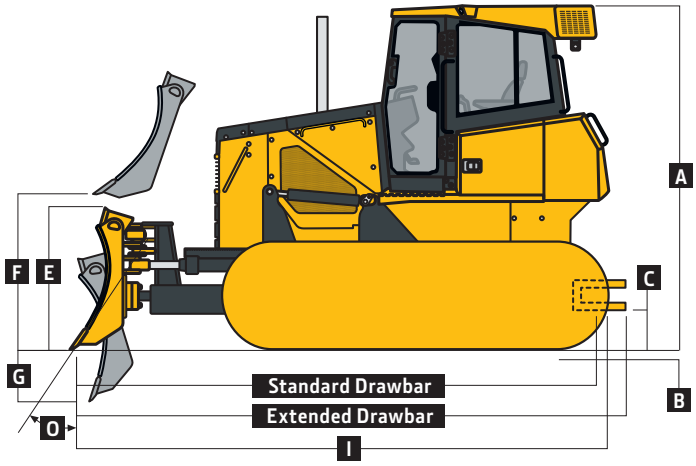

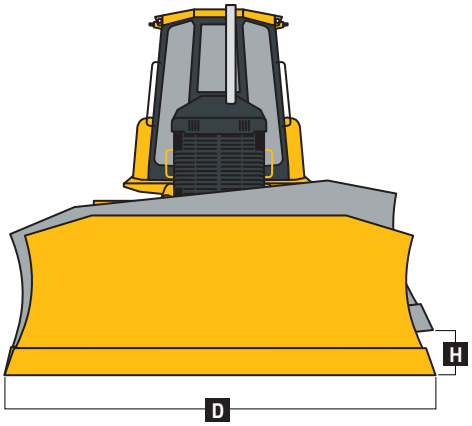

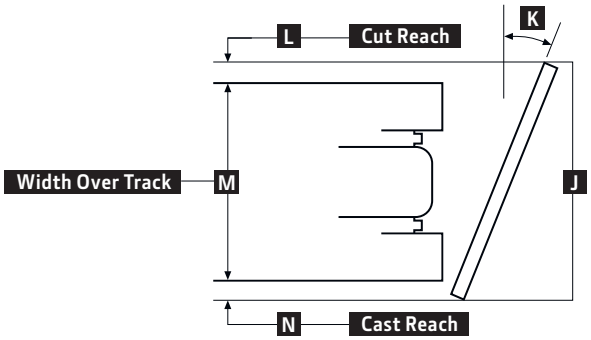

Rear Ripper	750J-II / 750J-II LT / 750J-II LGP
Multi-shank (3) parallelogram ripper with hydraulic pitch adjustment and ESCO® ripper tips	
Weight	1690 kg (3,725 lb.)
P Maximum Penetration	686 mm (27 in.)
Q Maximum Clearance Under Tip	686 mm (27 in.)
R Overall Length (lowered position)	1689 mm (5 ft. 7 in.)
R^{I} Overall Length (raised position)	1448 mm (4 ft. 9 in.)
S Overall Beam Width	2134 mm (7 ft. 0 in.)
T Slope Angle (full raise)	22 deg.
U Ripping Width	1880 mm (6 ft. 2 in.)
V Distance Between Shanks	902 mm (3 ft. 0 in.)

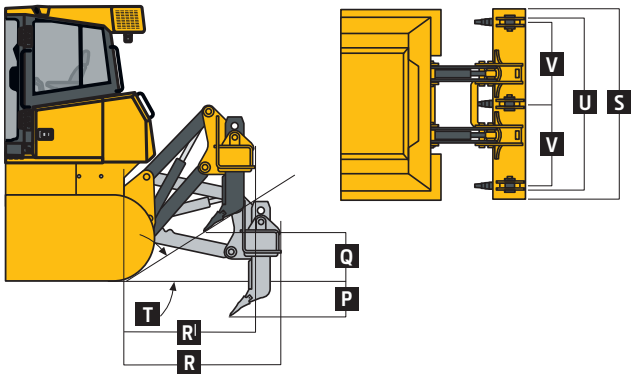



850J-II SPECIFICATIONS

While general information, pictures, and descriptions are provided, some illustrations and text may include product options and accessories NOT AVAILABLE in all regions, and in some countries products and accessories may require modifications or additions to ensure compliance with the local regulations of those countries.

Engine	**850J-II / 850J-II LGP *w/ Outside Dozer (OSD) Blade* / 850J-II WLT and 850J-II LGP *w/ Power/Angle/Tilt (PAT) Blade***		
Manufacturer and Model	John Deere PowerTech™ 6068 with Exhaust Gas Recirculation (EGR)	John Deere PowerTech™ Plus 6068 with EGR	John Deere PowerTech Plus 6090 with EGR
Non-Road Emission Standard	EU Stage II emissions	EU Stage IIIA and Brazil MAR-I emissions	EU Stage IIIA and Brazil MAR-I emissions
Cylinders	6	6	6
Displacement	6.8 L (414 cu. in.)	6.8 L (414 cu. in.)	9.0 L (548 cu. in.)
SAE Net Rated Power	153 kW (205 hp) at 1,800 rpm	153 kW (205 hp) at 1,800 rpm	153 kW (205 hp) at 1,800 rpm
Net Peak Torque	915 Nm (675 lb.-ft.) at 1,500 rpm	915 Nm (675 lb.-ft.) at 1,500 rpm	915 Nm (675 lb.-ft.) at 1,500 rpm
Aspiration	Turbocharged with charge-air cooler	Turbocharged with charge-air cooler	Turbocharged with charge-air cooler
Lubrication	Pressure system with full-flow spin-on filter and oil-to-water cooler	Pressure system with full-flow spin-on filter and oil-to-water cooler	Pressure system with full-flow spin-on filter and oil-to-water cooler
Air Cleaner	Dual-stage dry type with tangential unloader	Dual-stage dry type with tangential unloader	Dual-stage dry type with tangential unloader
Slope Operation, Maximum Angle	45 deg. fore-aft / 30 deg. side slope	45 deg. fore-aft / 30 deg. side slope	45 deg. fore-aft / 30 deg. side slope
Cooling	**850J-II / 850J-II LGP / 850J-II WLT**		
Type	Variable-speed suction fan		
Engine Coolant Rating	–37 deg. C. (–34 deg. F)		
Powertrain			
Transmission	Automatic, dual-path, hydrostatic (HST) drive; load-sensing feature automatically adjusts speed and power to match changing load conditions; each individually controlled track is powered by a variable-displacement piston pump and motor combination; ground-speed selection buttons on single-lever steering and direction control; independently selectable reverse speed ratios of 100% ,115%, or 130% of forward ground speed; decelerator pedal controls ground speed to stop		
System Relief Pressure	45 850 kPa (6,650 psi)		
Travel Speeds			
Forward and Reverse	9.7 km/h (6.0 mph)		
Maximum (optional)	10.9 km/h (6.8 mph)		
Steering	Single-lever steering, speed, direction control, and counter-rotation; full power turns and infinitely variable track speeds provide unlimited maneuverability and optimum control; HST steering eliminates steering clutches and brakes		
Final Drives	Double-reduction, planetary final drives transfer torque loads over 3 gear sets; mounted independently of track frames and dozer push frames for isolation from shock loads		
Total Ratio	44.7 to 1		
Drawbar Pull			
Maximum	344 kN (77,300 lb.)		
At 1.9 km/h (1.2 mph)	178 kN (40,000 lb.)		
At 3.2 km/h (2.0 mph)	131 kN (29,500 lb.)		
Brakes	Decelerator/brake pedal; automatic power management with manual override for matching ground speed		
Service	HST (dynamic) braking stops machine when the direction/steering control lever is moved to neutral or the decelerator is depressed to the end of travel		
Type	Hydraulic		
Parking	Exclusive safety feature engages wet, multiple-disc brakes whenever the engine stops, the decelerator is depressed to the end of travel, or the park-lock lever is placed in the start or neutral positions and motion is detected; machine cannot be driven with brake applied, reducing wear-out or need for adjustment; spring-applied hydraulic release		
Hydraulics			
Type	Load-sense, piston pump		
Pump, 74-cc	174 L/m (46 gpm)		
System Relief Pressure	24 993 kPa (3,625 psi)		
Differential Pressure	1896 kPa (275 psi)		

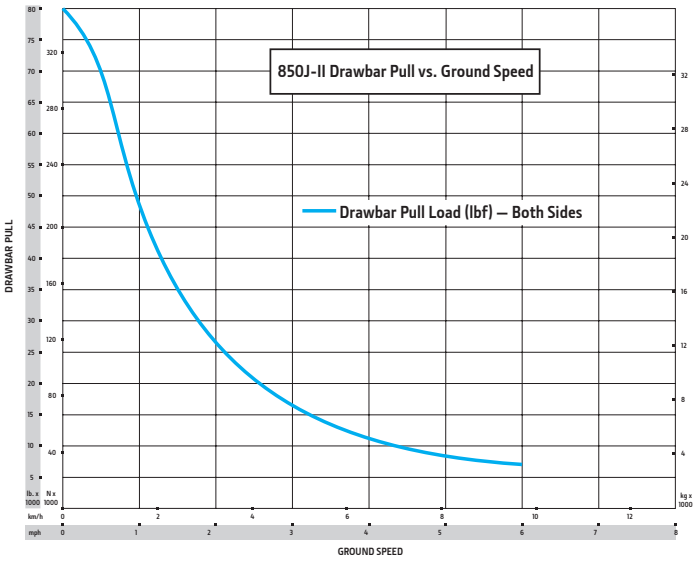

850J-II SPECIFICATIONS



While general information, pictures, and descriptions are provided, some illustrations and text may include product options and accessories NOT AVAILABLE in all regions, and in some countries products and accessories may require modifications or additions to ensure compliance with the local regulations of those countries.

Hydraulics *(continued)*	**850J-II / 850J-II LGP**	**850J-II WLT / 850J-II LGP**
Blade Type	***OSD***	***PAT***
Maximum Flow at Unloaded High Idle	163 L/m (43 gpm)	163 L/m (43 gpm)
Control	T-bar hydraulic-pilot 2-function joystick	T-bar hydraulic-pilot 2-function joystick with push-button angle function
Cooling	Convective oil sump	Convective oil sump
Cylinders	**850J-II / 850J-II LGP / 850J-II WLT**	
Type	Heat-treated, chrome-plated, polished cylinder rods; hardened steel (replaceable bushings) pivot pins	
Electrical		
Voltage	24 volts	
Capacity		
Battery	950 CCA	
Reserve	190 min.	
Alternator Rating		
Cab	80 amp	
Canopy	55 amp	
Lights	Grille mounted (2), rear mounted (1), and rear reflectors (2)	

Undercarriage	**850J-II**	**850J-II LGP**	**850J-II WLT**	**850J-II LGP**
Blade Type	***OSD***	***OSD***	***PAT***	***PAT***
Tracks	Track frame with front and rear track guides and sprocket guard; John Deere Dura-Trax™ features deep-heat-treated, sealed, and lubricated track links and through-hardened, sealed, and lubricated rollers for maximum wear resistance; sprockets are segmented; extreme-duty shoes are available (on some models) for severe applications			
Track Gauge, Standard	1880 mm (74 in.)	2184 mm (86 in.)	2235 mm (88 in.)	2388 mm (94 in.)
Grouser Width, Closed Center, Single Bar	610 mm (24 in.)	762 mm (30 in.)	762 mm (30 in.)	762 mm (30 in.)
Chain	Sealed and lubricated	Sealed and lubricated	Sealed and lubricated	Sealed and lubricated
Shoes, Each Side	40	45	45	45
Track Rollers, Single Flange, Each Side	7	8	8	8
Track Length on Ground	2769 mm (109 in.)	3284 mm (129 in.)	3284 mm (129 in.)	3284 mm (129 in.)
Ground Contact Area	33 755 cm^2 (5,232 sq. in.)	60 064 cm^2 (9,310 sq. in.)	50 052 cm^2 (7,758 sq. in.)	60 064 cm^2 (9,310 sq. in.)
Ground Pressure, Outside Dozer (OSD)	52.5 kPa (7.61 psi)	33.1 kPa (4.80 psi)	39.0 kPa (5.65 psi)	33.3 kPa (4.83 psi)
Track Pitch	203 mm (8 in.)	203 mm (8 in.)	203 mm (8 in.)	203 mm (8 in.)
Oscillation at Front Roller	±114 mm (±4.5 in.)	±168 mm (±6.6 in.)	±166.5 mm (±6.5 in.)	±168 mm (±6.6 in.)
Blades				
Straight end bits included in weights.				
Blade Type	***OSD with Semi-U***	***OSD with Semi-U***	***PAT***	***PAT***
Weight	1326 kg (2,923 lb.)	1463 kg (3,225 lb.)	1330 kg (2,932 lb.)	1397 kg (3,080 lb.)
Length	3251 mm (128 in.)	3861 mm (152 in.)	4013 mm (158 in.)	4267 mm (168 in.)
Capacity	5.57 m^3 (7.29 cu. yd.)	6.0 m^3 (7.85 cu. yd.)	4.26 m^3 (5.57 cu. yd.)	4.49 m^3 (5.87 cu. yd.)
Push-Beam Assembly Weight (without blade)	1672 kg (3,687 lb.)	1903 kg (4,196 lb.)	—	—
C-Frame Assembly Weight (without blade)	—	—	1647 kg (3,631 lb.)	1647 kg (3,631 lb.)
Operator Station	**850J-II / 850J-II LGP / 850J-II WLT / 850J-II LGP**			
ROPS (ISO 3471 – 2008) and FOPS (ISO 3449 – 2005)				

Serviceability	**850J-II**	**850J-II LGP**	**850J-II WLT**	**850J-II LGP**
Blade Type	***OSD***	***OSD***	***PAT***	***PAT***
Refill Capacities				
Fuel Tank With Lockable Cap	371 L (98 gal.)	371 L (98 gal.)	371 L (98 gal.)	371 L (98 gal.)
Cooling System With Recovery Tank	35 L (9.2 gal.)	35 L (9.2 gal.)	35 L (9.2 gal.)	35 L (9.2 gal.)
Engine Oil With Filter	26 L (7 gal.)	26 L (7 gal.)	26 L (7 gal.)	26 L (7 gal.)
Reservoir With Filter				
Transmission	106 L (28 gal.)	106 L (28 gal.)	106 L (28 gal.)	106 L (28 gal.)
Hydraulic	106 L (28 gal.)	106 L (28 gal.)	106 L (28 gal.)	106 L (28 gal.)
Final Drive (each)				
Inner	9.5 L (2.5 gal.)	18.9 L (5.0 gal.)	15.9 L (4.2 gal.)	18.9 L (5.0 gal.)
Outer	15.9 L (4.2 gal.)	15.9 L (4.2 gal.)	15.9 L (4.2 gal.)	15.9 L (4.2 gal.)

850J-II

While general information, pictures, and descriptions are provided, some illustrations and text may include product options and accessories NOT AVAILABLE in all regions, and in some countries products and accessories may require modifications or additions to ensure compliance with the local regulations of those countries.

Operating Weights	850J-II	850J-II LGP	850J-II WLT	850J-II LGP
Blade Type	***OSD***	***OSD***	***PAT***	***PAT***
With standard equipment, cab, rear ripper, full fuel tank, and 79-kg (175 lb.) operator	20 714 kg (45,667 lb.)	22 634 kg (49,899 lb.)	22 248 kg (49,048 lb.)	22 770 kg (50,199 lb.)
Optional Components				
Track Shoes				
610-mm (24 in.) Moderate Duty	In base*	–907 kg (–411 lb.)	—	–411 kg (–907 lb.)
610-mm (24 in.) Extreme Duty	306.4 kg (675.5 lb.)	–66 kg (–146 lb.)	—	–66 kg (–146 lb.)
760-mm (30 in.) Moderate Duty	—	In base*	In base*	In base*
760-mm (30 in.) Extreme Duty	—	445 kg (981 lb.)	436.1 kg (961 lb.)	445 kg (981 lb.)
900-mm (36 in.) Moderate Duty	—	459 kg (1,012 lb.)	—	—
Cab With Pressurizer and Heater/Air Conditioner	337 kg (743 lb.)	337 kg (743 lb.)	337 kg (743 lb.)	337 kg (743 lb.)
Full-Length Rock Guard	222 kg (490 lb.)	242 kg (534 lb.)	242 kg (534 lb.)	242 kg (534 lb.)
Final Drive Seal Guard	70 kg (155 lb.)	70 kg (155 lb.)	70 kg (155 lb.)	70 kg (155 lb.)
Retrieval Hitch	52 kg (114 lb.)	52 kg (114 lb.)	52 kg (114 lb.)	52 kg (114 lb.)
Drawbar, Extended Rigid	130 kg (286 lb.)	130 kg (286 lb.)	130 kg (286 lb.)	130 kg (286 lb.)
Heavy-Duty Grille	39 kg (86 lb.)	39 kg (86 lb.)	39 kg (86 lb.)	39 kg (86 lb.)
ROPS Canopy				
Front and Door Screens	84 kg (186 lb.)	84 kg (186 lb.)	84 kg (186 lb.)	84 kg (186 lb.)
Cab With Air Conditioner				
Front and Door Screens	79 kg (175 lb.)	79 kg (175 lb.)	79 kg (175 lb.)	79 kg (175 lb.)
Rear Screen	34 kg (75 lb.)	34 kg (75 lb.)	34 kg (75 lb.)	34 kg (75 lb.)
Side Screens	54 kg (120 lb.)	54 kg (120 lb.)	54 kg (120 lb.)	54 kg (120 lb.)
Condenser Guard	55 kg (121 lb.)	55 kg (121 lb.)	55 kg (121 lb.)	55 kg (121 lb.)
Limb Risers (ROPS canopy and cab)	272 kg (600 lb.)	272 kg (600 lb.)	272 kg (600 lb.)	272 kg (600 lb.)
Lift-Cylinder Guards	80 kg (176 lb.)	80 kg (176 lb.)	42 kg (93 lb.)	42 kg (93 lb.)
Blade Brush Guard	87 kg (192 lb.)	87 kg (192 lb.)	87 kg (192 lb.)	87 kg (192 lb.)
Tank Guard	323 kg (712 lb.)	323 kg (712 lb.)	323 kg (712 lb.)	323 kg (712 lb.)
Counterweight				
Front	397 kg (875 lb.)	397 kg (875 lb.)	397 kg (875 lb.)	397 kg (875 lb.)
Rear	449 kg (990 lb.)	449 kg (990 lb.)	449 kg (990 lb.)	449 kg (990 lb.)
**Included in SAE operating weight.*				
Machine Dimensions				
A Overall Height to Roof	3175 mm (125 in. / 10 ft. 5 in.)	3175 mm (125 in. / 10 ft. 5 in.)	3175 mm (125 in. / 10 ft. 5 in.)	3175 mm (125 in. / 10 ft. 5 in.)
Overall Height to Exhaust Stack	3188 mm (125.5 in. / 10 ft. 5.5 in.)	3188 mm (125.5 in. / 10 ft. 5.5 in.)	3188 mm (125.5 in. / 10 ft. 5.5 in.)	3188 mm (125.5 in. / 10 ft. 5.5 in.)
B Tread Depth With Single-Bar Grouser				
Moderate Duty	66 mm (2.6 in.)	66 mm (2.6 in.)	66 mm (2.6 in.)	66 mm (2.6 in.)
Extreme Duty	71 mm (2.8 in.)	71 mm (2.8 in.)	71 mm (2.8 in.)	71 mm (2.8 in.)
C Ground Clearance With Grousers (excludes grouser height)	409 mm (16.1 in.)	409 mm (16.1 in.)	409 mm (16.1 in.)	409 mm (16.1 in.)
D Blade Width	3251 mm (128 in. / 10 ft. 8 in.)	3861 mm (152 in. / 12 ft. 8 in.)	4013 mm (158 in. / 13 ft. 2 in.)	4267 mm (168 in. / 14 ft. 0 in.)
E Blade Height	1422 mm (56 in. / 4 ft. 8 in.)	1321 mm (52 in. / 4 ft. 4 in.)	1229 mm (48 in. / 4 ft. 0 in.)	1229 mm (48 in. / 4 ft. 0 in.)
F Blade Lift Height	1151 mm (45 in. / 3 ft. 9 in.)	1151 mm (45 in. / 3 ft. 9 in.)	1072 mm (42 in. / 3 ft. 6 in.)	1072 mm (42 in. / 3 ft. 6 in.)
G Blade Digging Depth	599 mm (24 in.)	599 mm (24 in.)	704 mm (28 in.)	704 mm (28 in.)
H Blade Tilt (uses tilt jack)	753 mm (30 in.)	853 mm (34 in.)	533 mm (21 in.)	572 mm (23 in.)
I Overall Length With Blade	5384 mm (212 in. / 17 ft. 8 in.)	5940 mm (234 in. / 19 ft. 6 in.)	5740 mm (226 in. / 18 ft. 10 in.)	5740 mm (226 in. / 18 ft. 10 in.)

While general information, pictures, and descriptions are provided, some illustrations and text may include product options and accessories NOT AVAILABLE in all regions, and in some countries products and accessories may require modifications or additions to ensure compliance with the local regulations of those countries.

Machine Dimensions *(continued)*	850J-II	850J-II LGP	850J-II WLT	850J-II LGP
Blade Type	***OSD***	***OSD***	***PAT***	***PAT***
J Overall Width With Blade Angled	—	—	3658 mm (144 in. / 12 ft. 0 in.)	3901 mm (154 in. / 12 ft. 10 in.)
K Blade Angle	—	—	23.8 deg.	23.8 deg.
L Cut Reach	—	—	145 mm (5.7 in.)	109 mm (4.3 in.)
M Width Over Track	2489 mm (98 in. / 8 ft. 2 in.)	3099 mm (122 in. / 10 ft. 2 in.)	2997 mm (118 in. / 9 ft. 10 in.)	3302 mm (130 in. / 10 ft. 10 in.)
N Cast Reach	—	—	271 mm (10.7 in.)	234 mm (9.2 in.)
O Cutting Edge Angle	51.5–61 deg.	51.5–61 deg.	55.1–60.2 deg.	55.1–60.2 deg.

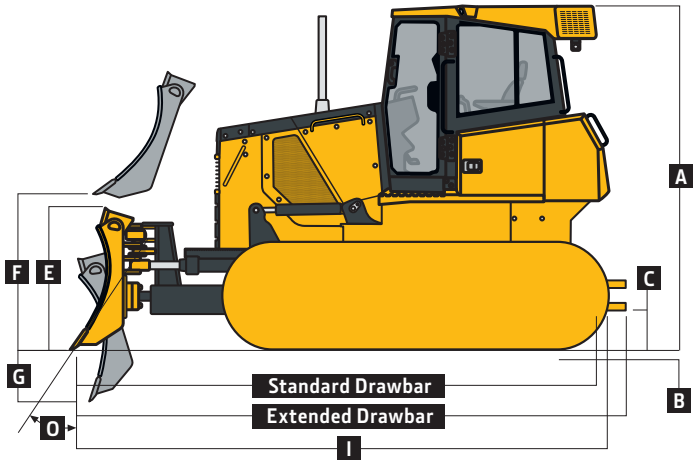

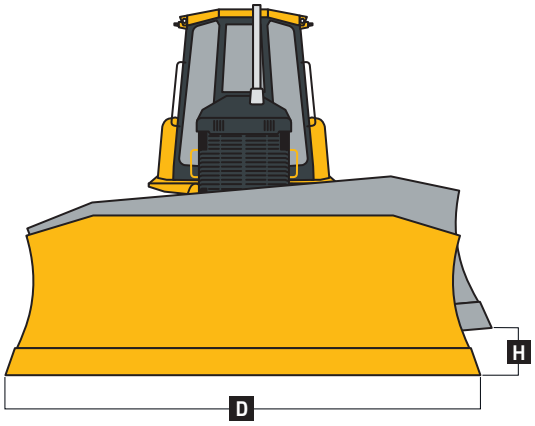

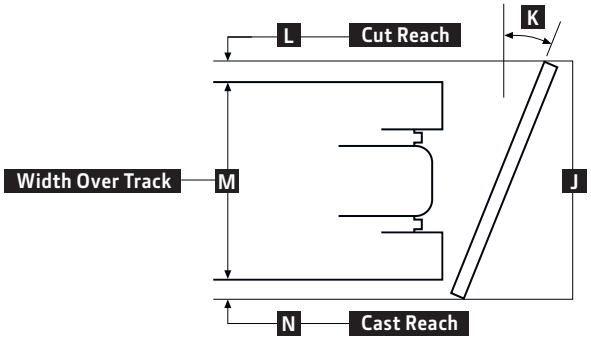

Rear Ripper	850J-II / 850J-II LGP / 850J-II WLT
Multi-shank (3) parallelogram ripper with hydraulic pitch adjustment and ESCO® ripper tips	
Weight	2032 kg (4,480 lb.)
P Maximum Penetration	723.9 mm (28.5 in.)
Q Maximum Clearance Under Tip	610 mm (24 in.)
R Overall Length (lowered position)	1626 mm (5 ft. 4 in.)
R^{I} Overall Length (raised position)	1525 mm (5 ft. 0 in.)
S Overall Beam Width	2400 mm (7 ft. 10 in.)
T Slope Angle (full raise)	24 deg.
U Ripping Width	2146 mm (7 ft. 1 in.)
V Distance Between Shanks	1041 mm (3 ft. 5 in.)

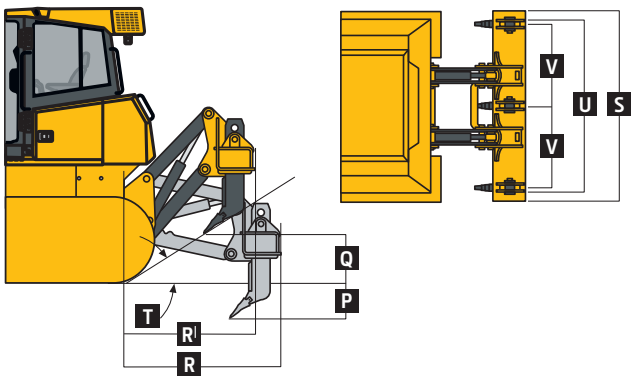

Additional equipment

Key: ● Standard ▲ Optional or special — See your John Deere dealer for further information.

700J	750J	850J	Engine
●	●	●	Meets EU Stage IIIA and Brazil MAR-I emissions
		▲	Meets EU Stage II emissions
●	●	●	Eco mode
●	●	●	Electronic control with automatic engine protection
●	●	●	Dual safety element dry-type air cleaner, evacuator valve
●	●	●	Muffler, self-draining, under hood, with vertical stack
●	●	●	Environmental service drains
▲	▲	▲	Ether start aid
▲			Engine coolant heater, 120 volts
▲			Engine coolant heater, fuel fired
▲	▲	▲	Chrome exhaust
	▲	▲	Rotary ejector engine air pre-cleaner
			Cooling
●	●	●	Engine coolant rated –37 deg. C (–34 deg. F)
	●	●	Automatic, programmable reversing fan
●	●		Engine radiator (10.5 fins per in.)
		●	Engine radiator (6.5 fins per in.)
●	●	●	Perforated engine side shields
●			Heavy-duty grille
	●	●	Split-hinge bar-type grille
▲	▲	▲	Extreme-duty grille
			Transmission
●	●	●	Diagnostic test ports
●	●	●	Environmental service drains
	▲	▲	Final-drive seal guards
			Hydraulic System
	●	●	2-function hydraulics
●	▲	▲	3-function hydraulics
▲	▲	▲	4-function hydraulics with rear plumbing
▲	▲	▲	Integrated Grade Control (IGC)
			Mainframe, Access Panels
	●	●	Tilt operator station transmission access
●			Front tow loop (bolt-on)

700J	750J	850J	Mainframe, Access Panels *(continued)*
	●	●	Front tow loops
●	●	●	Hinged bottom access covers (bolt-on)
●	●	●	Vandal protection: Engine access door / Side tank access doors / Fuel tank / Instrument panel / Transmission reservoir / Hydraulic reservoir
	●	●	Maintenance-free center cross-bar pivot
			Attachments
▲	▲	▲	Retrieval hitch with pin
▲	▲	▲	Extended rigid drawbar with pin for pull-type implements
▲			Counterweight, front, 172 kg (380 lb.)
	▲		Counterweight, front, 249 kg (550 lb.)
	▲		Counterweight, rear, 327 kg (720 lb.)
		▲	Counterweight, front, 397 kg (875 lb.)
		▲	Counterweight, rear, 449 kg (990 lb.)
▲			Ripper, parallelogram with 5 shank pockets and 3 teeth
	▲	▲	Ripper, parallelogram with 3 shank pockets and 3 teeth
			Undercarriage
●	●	●	Oscillating undercarriage with remote lube
●	●	●	Full-length, smooth-surface track frame covers
●	●	●	Bolt-on chain guides, front and rear
●	●	●	Segmented sprockets
●	●	●	Double-flange rollers
▲	▲	▲	Extended life undercarriage with SC-2™ bushings
▲			Maximum Life Undercarriage System
▲	▲	▲	Full-length rock guards

XLT	LGP	700J-II Shoes
●	▲	560-mm (22 in.) moderate duty
	●	760-mm (30 in.) moderate duty
STD	**LT**	**750J-II Shoes**
●	●	610-mm (24 in.) moderate duty
▲	▲	610-mm (24 in.) extreme duty
	●	865-mm (34 in.) moderate duty
STD	**LGP**	**850J-II Shoes**
●	▲	610-mm (24 in.) moderate duty
▲	▲	610-mm (24 in.) extreme duty
	●	760-mm (30 in.) moderate duty
	▲	760-mm (30 in.) extreme duty
	▲	900-mm (36 in.) moderate duty

Canopy	Cab	Operator's Station / Electrical
●	●	Retractable seat belts, 76 mm (3 in.) (conform to SAE J386)
●	●	Convex interior rear mirror, 102-mm (4 in.) tall, 203-mm (8 in.) wide (conforms to SAE J985)
●	●	Power port, 12 volts
▲	▲	Second power port, 12 volts‡
●	●	Lockable dash-mounted storage compartment
	●	Air conditioner, 24,000 Btu
	●	Tinted glass
	●	Dome light
	●	Heater (roof mount)
	●	Front and door wipers
▲		Air-suspension vinyl seat
	▲	Air-suspension fabric seat
▲		Under-seat heater
	▲	Rear wiper
	▲	AM/FM/Weather-Band radio/clock
	▲	External-mounted attachment mirror
●	●	Sealed alternator, 55 amps
●	●	Master electrical disconnect switch
●	●	LED lights, grille mounted (2)
▲	▲	Work lights with additional front LED (2) and halogen rear lights (2)
▲	▲	JDLink™ wireless communication system (available in specific countries; see your dealer for details)

**See your John Deere dealer for further information.*

‡*750J-II and 850J-II only.*

While general information, pictures, and descriptions are provided, some illustrations and text may include product options and accessories NOT AVAILABLE in all regions, and in some countries products and accessories may require modifications or additions to ensure compliance with the local regulations of those countries.

Net engine power is with standard equipment including air cleaner, exhaust system, alternator, and cooling fan at test conditions per ISO9249. No derating is required up to 10,000-ft. (3050 m) altitude. Also available: winches, fairleads, log arches, skidding grapples, trash packages, landfill protection packages, cable plows, side booms, field-installed cab for canopy, canopy heater, and fire suppression systems. Specifications and design subject to change without notice. Wherever applicable, specifications are in accordance with SAE standards. Except where otherwise noted, these specifications are based on units with rollover protective structures, full fuel tanks, 175-lb. (79 kg) operators, and standard equipment; 700J-II XLT unit with rigid drawbar, 560-mm (22 in.) track shoes, and PAT blade; 700J-II LGP unit with rigid drawbar, 760-mm (30 in.) track shoes, and PAT blade; 750J-II unit with rigid drawbar, 610-mm (24 in.) track shoes, and OSD blade; 750J-II LT unit with rigid drawbar, 610-mm (24 in.) track shoes, and PAT blade; 750J-II LGP unit with rigid drawbar, 865-mm (34 in.) track shoes, and PAT blade; 850J-II unit with 610-mm (24 in.) track shoes and OSD blade; 850J-II WLT unit with 760-mm (30 in.) track shoes and PAT blade; and 850J-II LGP unit with 760-mm (30 in.) track shoes and PAT blade.

JohnDeere.com

DKAJIIUDZRLA_EN (21-11)