

EZ28

Tracked Zero Tail Excavator

designed for construction site champions

The EZ28 compact excavator offers a modern design, flexibility and operator-friendliness. Heading to the next job site with a trailer? No problem – the low weight allows transport, including an attachment with a 3.5-metric ton trailer. The EZ28 offers an ergonomic workplace with joystick mount, a wide cab entry and well-placed operating and display elements.

MAT: 1000454706

Highlights

- Up to four additional factory-installed control circuits
- Zero Tail
- Canopy can be easily disassembled

Technical Data

Hydraulic

Operating pressure hydraulics	225.0 bar

Mechanical - Output Details

Nominal rotation speed	2,500.0 1/min
Travel speed	2.1 km/h

Mechanical Details

Length	4,290.0 mm
Width	1,570.0 mm
Height	2,414.0 mm
Operating weight (min.-max.)	2,571.0 - 3,513.0 kg
Digging depth (max.)	2,744.0 mm

Engine

Cooling	Water-cooling
Engine type	Diesel engine
Cylinder capacity	1,116.0 cm³
Tank capacity	36.0 l
Effective power	15.8 kW
Nominal Engine speed	2,500.0 1/min
Starter battery Voltage	12.0 V
Engine Manufacturer	Yanmar

Environment Data

Sound power LWA, guaranteed	93.0 dB(A)

Operating Fluids

Oil volume	3.400 l
Cooling fluid volume	4.5 l
Hydraulic fluid volume	30.0 l

Chassis

Traction drive	Axialpistonmotor with RGU

Shipping and Storage

Shipping weight	2,470.0 kg

The illustrations, equipment and data shown may deviate from the current delivery program of your country. Optional equipment subject to additional charge may be shown. Subject to changes.

Copyright © 2026 Wacker Neuson SE | www.wackerneuson.com

Available engines

Yanmar 3TNV76-XNSV EU Stage V

Engine type	Diesel engine
Cylinder capacity	1,116 cm^3
Fuel	Diesel EN 590
Effective power	15.8 kW
Nominal Engine speed	2,500 1/min
Maximum torque	66.1 Nm
Engine speed (max. torque)	1,800 1/min
Exhaust-gas limit	EU Stage V
Engine Manufacturer	Yanmar
Engine Designation	3TNV76-XNSV
Stroke	82 mlai
Bore	76 mlai

The illustrations, equipment and data shown may deviate from the current delivery program of your country. Optional equipment subject to additional charge may be shown. Subject to changes.

Copyright © 2026 Wacker Neuson SE | www.wackerneuson.com

Dimensions

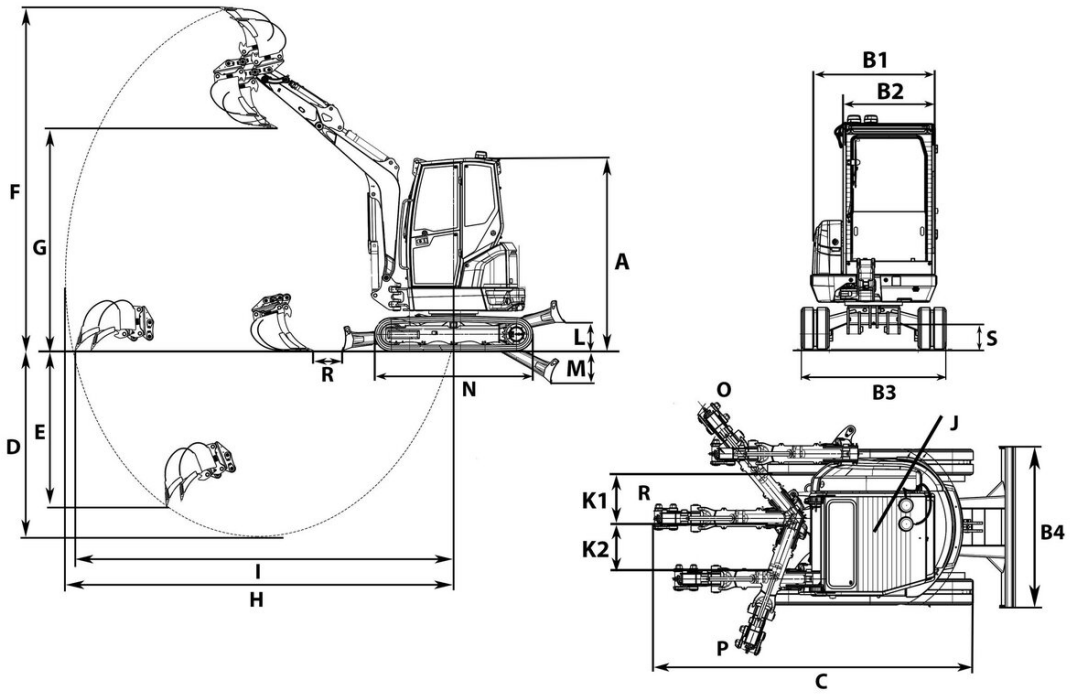

A	Height of canopy	2,414 mm
	Height of dozer blade	300 mm
B1	Width of upper carriage	1,366 mm
B2	Width of cab	986 mm
B3	Width travel gear	1,570 mm
B5	Width of dozer blade	1,570 mm
C2	Transport length short shovel arm	4,266 mm
D2	Digging depth max., short shovel arm	2,537 mm
E2	Piercing depth max., short shovel arm	1,949 mm
F2	Piercing height max., short shovel arm	4,176 mm
G2	Dumping height max., short shovel arm	2,847 mm
H2	Digging radius max., short shovel arm	4,624 mm
I2	Max. reach at ground level (short shovel arm)	4,490 mm
J1	Tail swing radius	770 mm
K1	Boom offset max. (to center of bucket right side)	765 mm
K2	Boom offset max. (to center of bucket left side)	531 mm
L1	Stacking height max. (dozer blade above surface)	387 mm
M1	Digging depth max. (dozer blade below surface)	412 mm
N1	Length travel drive	2,021 mm
O1	Max. swivel angle (arm system to the left)	75 °
O2	Max. swivel angle (arm system to the right)	50 °
P1	Track width	300 mm
Q1	Boom swing radius center	2,082 mm
Q2	Boom swing radius right	1,964 mm
Q3	Boom swing radius left	1,660 mm
R1	Distance bucket dozer blade, short shovel arm	267 mm

The illustrations, equipment and data shown may deviate from the current delivery program of your country. Optional equipment subject to additional charge may be shown. Subject to changes.

Copyright © 2026 Wacker Neuson SE | www.wackerneuson.com