

ET35

Tracked Conventional Excavator

Impressive productivity

The tracked excavator in the 3.5-metric ton class impresses with its performance and many well thought-out details. Along with the optimized engine-pump management for up to 15% faster working cycles, the excellent stability and the ergonomically designed cabin ensure efficient and fatigue-free work. Thanks to the numerous options available ex work, the ET35 can also be adapted individually to the customer's requirements.

MAT: 1000368068

Highlights

- VDS Vertical Digging System
- Optimized drive concept
- Jog dial
- Comfortable, fully glazed cab
- Up to four additional factory-installed control circuits

Technical Data

Hydraulic

Operating pressure hydraulics	240.0 bar
Hydraulicpump	Axial piston and 2 gear pumps
Flow rate max.	120.0 l/min

Mechanical - Output Details

Travel speed	4.7 km/h

Mechanical Details

Length	5,271.0 mm
Width	1,630.0 mm
Height	2,711.0 mm
Operating weight (min.-max.)	3,553.0 - 4,753.0 kg
Digging depth (max.)	3,497.0 mm

Engine

Cooling	Water-cooling
Engine type	Diesel engine
Cylinder	3.0
Cylinder capacity	1,642.0 cm^3
Inclined position max.	30.0 °
Fuel	Diesel EN 590
Effective power	18.2 kW
Nominal Engine speed	2,400.0 1/min
Exhaust-gas limit	EU Stage V
Battery capacity (nom. value)	71.0 Ah
Engine Manufacturer	Yanmar
Engine Designation	3TNV88

Environment Data

Sound power LWA, guaranteed	94.0 dB(A)

Operating Fluids

Oil volume	6.700 l
Cooling fluid volume	5.0 l
Hydraulic fluid volume	61.5 l

Chassis

Traction drive	Axialpistonmotor with RGU

Shipping and Storage

Shipping weight	3,364.0 kg

The illustrations, equipment and data shown may deviate from the current delivery program of your country. Optional equipment subject to additional charge may be shown. Subject to changes.

Copyright © 2026 Wacker Neuson SE | www.wackerneuson.com

Available engines

22,2 kW Diesel engine (Stage 3a)

Cooling	Water-cooling
Engine type	Diesel engine
Cylinder	3
Cylinder capacity	1,642 cm³
Effective power	22.2 kW
Nominal Engine speed	2,400 1/min
Exhaust-gas limit	EPA3
Starter battery Voltage	12 µg/l
Engine Manufacturer	Yanmar
Engine Designation	3TNV88
Stroke	90 mlai
Bore	88 mlai

18,2 kW Diesel engine (Stage 5)

Cooling	Water-cooling
Engine type	Diesel engine
Cylinder	3
Cylinder capacity	1,642 cm³
Fuel	Diesel EN 590
Effective power	18.2 kW
Nominal Engine speed	2,400 1/min
Idling speed	1,200 1/min
Maximum torque	87.8 Nm
Engine speed (max. torque)	2,400 1/min
Exhaust-gas limit	EU Stage V
Engine Manufacturer	Yanmar
Engine Designation	3TNV88
Stroke	90 mlai
Bore	88 mlai

The illustrations, equipment and data shown may deviate from the current delivery program of your country. Optional equipment subject to additional charge may be shown. Subject to changes.

Copyright © 2026 Wacker Neuson SE | www.wackerneuson.com

Dimensions

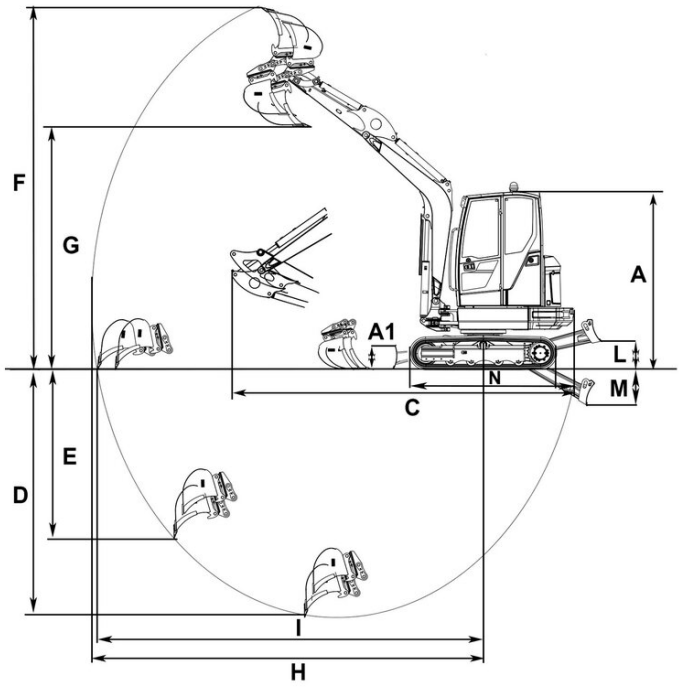

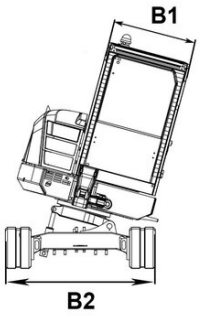

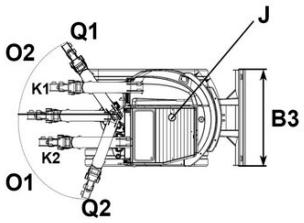

		Standard	VDS
A	Height with cab	2,491 mm	2,573 mm
	Total height of cabin with rotating beacon	2,630 mm	2,711 mm
B1	Width of cab	980 mm	980 mm
B2	Width travel gear	1,630 mm	1,630 mm
B3	Width of dozer blade	1,630 mm	1,630 mm
C	Transport length short shovel arm	5,268 mm	5,252 mm
D	Digging depth max., short shovel arm	3,245 mm	3,166 mm
	Digging depth max., long shovel arm	3,497 mm	3,416 mm
E	Piercing depth max., short shovel arm	2,120 mm	2,042 mm
	Piercing depth max., long shovel arm	2,360 mm	2,279 mm
F	Piercing height max., short shovel arm	4,929 mm	5,010 mm
	Piercing height max., long shovel arm	5,082 mm	5,163 mm
G	Dumping height max., short shovel arm	3,337 mm	3,417 mm
	Dumping height max., long shovel arm	3,489 mm	3,570 mm
H	Digging radius max., short shovel arm	5,270 mm	5,270 mm
	Digging radius max., long shovel arm	5,507 mm	5,507 mm
I	Max. reach at ground level (short shovel arm)	5,158 mm	5,143 mm
	Max. reach at ground level (long shovel arm)	5,408 mm	5,393 mm
J	Tail swing radius	1,168 mm	1,168 mm
K1	Boom offset max. (to center of bucket right side)	476 mm	476 mm
K2	Boom offset max. (to center of bucket left side)	447 mm	447 mm
L	Stacking height max. (dozer blade above surface)	393 mm	393 mm
M	Digging depth max. (dozer blade below surface)	505 mm	505 mm
N	Length travel drive	2,062 mm	2,062 mm
O1	Max. swivel angle (arm system to the left)	70 °	70 °
O2	Max. swivel angle (arm system to the right)	55 °	55 °
Q1	Boom swing radius right	55 °	55 °
Q2	Boom swing radius left	70 °	70 °

The illustrations, equipment and data shown may deviate from the current delivery program of your country. Optional equipment subject to additional charge may be shown. Subject to changes.

Copyright © 2026 Wacker Neuson SE | www.wackerneuson.com