

ET66

Tracked Conventional Excavator

perfectly combining economic efficiency, power and durability

With the well-balanced LUDV hydraulic system, ET66 is best equipped for every application and every requirement. The ET66 offers different attachments based on requirement. Large rear flaps and side doors as well as quick spare part procurement make the maintenance and service easy.

MAT: 1000499628

Highlights

- Powerful drive system with LUDV
- High degree of digging power
- Optimal maintenance access
- AUX I
- Optimized hydraulics or engine-pump management

Technical Data

Mechanical - Output Details

Nominal rotation speed	2,000.0 1/min
Travel speed stage 1	2.6 km/h
Travel speed stage 2	4.5 km/h

Mechanical Details

Length	6,105.0 mm
Width	2,104.0 mm
Height	2,558.0 mm
Operating weight	6,030.0 kg
Operating weight (min.-max.)	6,030.0 kg
Digging depth (max.)	3,877.0 mm

Engine

Cooling	Water-cooling
Engine type	Diesel engine
Engine operating mode	four-stroke
Cylinder capacity	3,054.0 cm^3
Inclined position max.	30.0 °
Tank capacity	109.0 l
Oil filling max.	109.0 l
Effective power	35.9 kW
Nominal Engine speed	2,000.0 1/min
Operating power	35.9 kW
Operating Engine speed	2,000.0 1/min
Exhaust-gas limit	中国四 (China IV)
Starter battery Voltage	12.0 V
Battery capacity (nom. value)	120.0 Ah
Engine Manufacturer	Yanmar
Engine Designation	4TNV94L-ZCWWN1

Environment Data

Sound power LWA, measured	97.0 dB(A)
Sound power LWA, guaranteed	99.0 dB(A)

Operating Fluids

Oil volume	11.600 l
Cooling fluid volume	10.0 l
Hydraulic fluid volume	100.0 l

Chassis

Traction drive	Axialpistonmotor with RGU
Operating pressure	250.0 bar

Shipping and Storage

Length for shipping	6,105.0 mm
Width for shipping	2,104.0 mm
Height for shipping	2,558.0 mm
Shipping weight	5,875.0 kg

The illustrations, equipment and data shown may deviate from the current delivery program of your country. Optional equipment subject to additional charge may be shown. Subject to changes.

Copyright © 2026 Wacker Neuson SE | www.wackerneuson.com

Dimensions

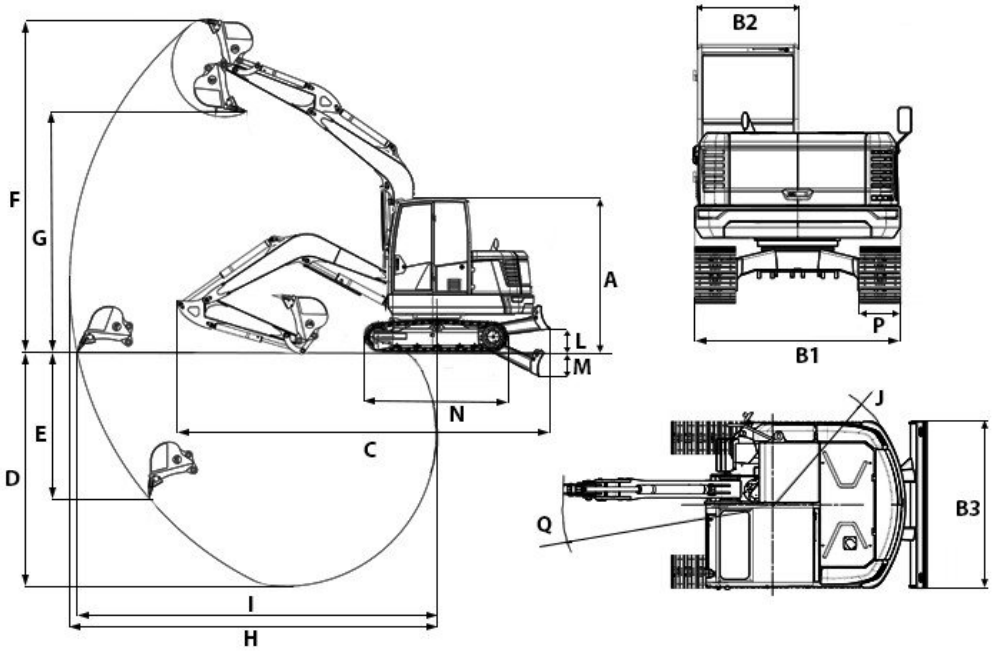

B1	Width of upper carriage	2,020 mm
B2	Width of cab	988 mm
B3	Width of dozer blade	2,020 mm
C	Transport length	6,105 mm
D	Digging depth max.	3,877 mm
E	Piercing depth max.	2,407 mm
F	Piercing height max.	5,521 mm
G	Dumping height max.	3,997 mm
H	Digging radius max.	6,097 mm
I	Max. reach at ground level	5,972 mm
J	Tail swing radius	1,619 mm
L	Stacking height max. (dozer blade above surface)	389 mm
M	Digging depth max. (dozer blade below surface)	399 mm
N	Length travel drive	2,418 mm
P	Track width	400 mm
Q	Boom swing radius center	2,530 mm

The illustrations, equipment and data shown may deviate from the current delivery program of your country. Optional equipment subject to additional charge may be shown. Subject to changes.

Copyright © 2026 Wacker Neuson SE | www.wackerneuson.com