

5075

Wheel Loader

The rugged champion.

The Kramer 5075 is a compact and maneuverable 5-series wheel loader. The machine impresses with its dynamic all-wheel drive, high payload and low dead weight. With the specially shaped loading system and the P-kinematics, unloading from the second row is possible without any problems. The cabin, designed for functionality, enables safe operation of the most important work functions with the aid of a backlit keypad.

Automatic load stabilizer: The optional automatic load stabilizer ensures optimum comfort for man and machine.

Long loading system: An application-oriented lifting height due to optionally extended loading system.

Flexible use: A bucket volume from 0.75 m³ to 1.1 m³ depending on material density.

Exhaust gas stage V: Exhaust gas aftertreatment is provided by DOC and DPF.

Maneuverability: The 2 x 40° steering angle means minimum turning radius and maneuverability in the smallest area.

Technical Data

Standard engine data

Engine manufacturer	Rehlko
Drive output	55.4 kW
Drive output	74 PS
Cylinder capacity	2,482 cm³
Exhaust standard level	V
Exhaust aftertreatment	DOC / DPF

Weights

Bucket capacity (standard bucket)	0.75 m³
Payload (max.)	1,350 kg
Operating weight	4,200 - 4,290 kg
Payload (S=1.25)	2,000 kg
Lift capacity (max.)	33.8 kN
Tipping load (standard bucket)	3,400 kg
Tipping load (pallet fork)	2,500 kg

Filling levels

Tank capacity for fuel	75 l
Tank capacity for hydraulic oil	50 l

Drive system

Travel speed Standard	0-20 km/h
Travel speed Option 1	0-30 km/h
Differential lock	100% front axle

Hydraulic system

Work hydraulics discharge volume (max.)	68,4 l/min

Kinematics

Kinematics type	P
Quick change system	hydraulic

Steering

Steering angle max.	40 degree

Noise characteristic values

Guaranteed sound power level LwA (cabin)	101 dB(A)
Measured sound power level LwA	98.2 dB(A)
Sound pressure level at the operator's ear	74 dB(A)

The illustrations, equipment and data shown may deviate from the current delivery program of your country. Optional equipment subject to additional charge may be shown. Subject to changes.

Copyright © 2026 Kramer-Werke GmbH | www.kramer.de

Dimensions

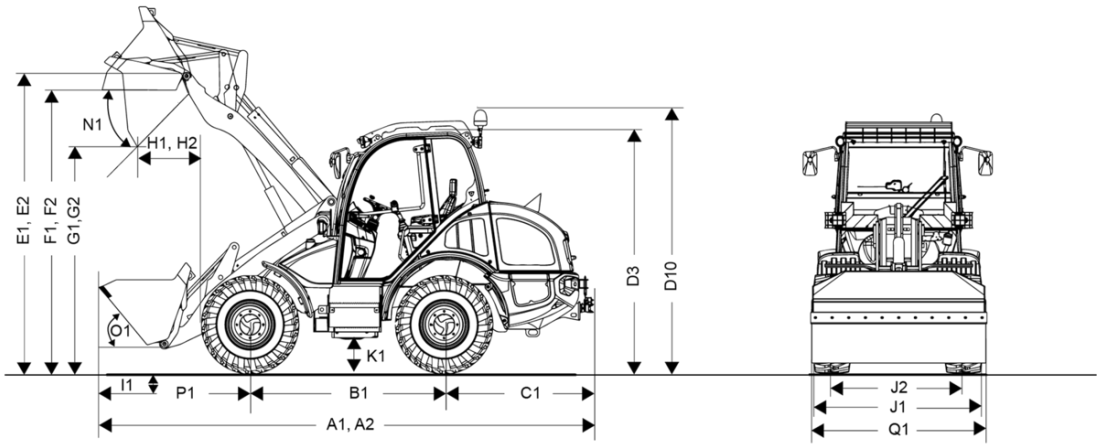

A1	Total length with standard attachment	5,120 mm
A2	extended loading system	5,280 mm
B1	Wheel base center	2,020 mm
C1	Rear overhang	1,490 mm
D3	Height with cab	2,428 mm
D10	Total height of cabin with rotating beacon	2,658 mm
E1	Max. height blade pivot point	3,100 mm
E2	Max. height of hinge pin height extended loading system	3,250 mm
F1	Load-over height	2,950 mm
F2	Load-over height extended loading system	3,100 mm
G1	Dumping height	2,400 mm
G2	extended loading system	2,560 mm
H1	Dumping width	700 mm
H2	Dumping range extended loading system	680 mm
I1	Digging depth	50 mm
J1	Total width	1,760 mm
J2	Track width	1,400 mm
K1	Ground clearance	300 mm
L1	Turning radius outer edge wheels	2,840 mm
M1	Steering angle	40 °
M2	Swing angle	22 °
N1	Dumping angle at max. lifting height	44 °
O1	Dumping angle at ground level	50 °
P1	Distance center front axle to tooth tip	1,730 mm
Q1	Bucket width	1,850 mm
R1	Stacking height	2,840 mm
R2	Stacking height extended loading system	2,990 mm

The illustrations, equipment and data shown may deviate from the current delivery program of your country. Optional equipment subject to additional charge may be shown. Subject to changes.

Copyright © 2026 Kramer-Werke GmbH | www.kramer.de

Standard components

Cab

- Soundproofed, vibration-insulated, 4-point suspension cab with large and deep-drawn thermal glazing, rear heated windshield
- Mechanically-sprung seat (MSG85/722) with automatic seat belt; weight, back and horizontal adjustment
- Incline-adjustable steering column
- 3-stage powerful heating and ventilation and defroster nozzles on the windscreen
- Color-coded keypads for hydraulic, electric, driving and safety functions
- Large, fold-over, exterior mirror on both sides
- Interior mirror, sun shade, cabin lighting, 12 V outlet
- Lighting according to road traffic regulations
- Work lights 2x LED Basic on front, 2x LED Basic on rear (1000 Lumen)
- Inspected according to ROPS and FOPS I

Engine

- Battery disconnector switch
- 4 years or 4,000 operating hours warranty on the engine

Power transmission

- "Smart Driving" rpm reduction
- Combined brake-inch pedal
- 100% self-locking differential connectable in the front axle
- Mechanical parking brake
- Lubrication line for pendulum pins

Steering and work hydraulics

- Hydrostatic all-wheel steering with emergency steering properties
- Mechanical pilot-operated joystick for lifting/lowering and filling/emptying the loader unit with a rocker switch for selecting the travel direction as well as an integrated 3rd control circuit (proportional control) and functional lighting integrated into the joystick

Kinematics

- Hydraulic quick-hitch plate
- Parallel kinematics
- Load hook on the tipping bar
- Visual position indicator for bucket and fork

Documentation

- Operator's manual, service manual

Options

Cab

- Cabin with heated rear windscreen, incl. door contact switch (standard)
- Cab with heated rear window and windscreen in door glass to the left, including door contact switch
- Air-sprung operator's seat (6830KM/855NTS) with heated seat
- Operator's seat (MSG85/721) with faux leather cover
- Radio system (radio, antenna, speaker)
- Radio installation
- Air-conditioning system
- 2-step entry
- Rotating beacon LED
- Document box
- Protective faux leather cover, loose
- Automatic orange seatbelt

Lighting

- High gear 30 km/h incl. Smart Driving
  - only in association with
    - Load stabilizer (vibration damper)
    - License plate illumination, including license plate bracket in front
    - Combined front axle and crab steering
- Combined front axle and crab steering
- Low-speed device (CSD) and hand throttle

The illustrations, equipment and data shown may deviate from the current delivery program of your country. Optional equipment subject to additional charge may be shown. Subject to changes.

Copyright © 2026 Kramer-Werke GmbH | www.kramer.de

Approval, road traffic

- License plate illumination, including license plate bracket in front
- Data confirmation (ABE) for self-propelled working machine (standard) *

* Germany, Luxembourg, Netherlands, Austria, Slovakia, Czech Republic, Switzerland, Estonia, Latvia, Lithuania, Hungary

Drive system & Axles

In conjunction with a ball hitch, the rear outlet must always be selected

- Ball head coupling (K50) - fixed to frame
- Automatic towing hitch 38 mm - fixed to frame

Tires

- Load stabilizer (vibration damper)
- Loading system with increased lifting height (payload and bucket volume may be reduced)
- "Smart Attach" quick coupler, fully hydraulic, Kramer HV/WL-C system
- Hydraulic quick coupler, EURO system (technical data and available attachments differ)

Loading system & Quick coupler system

- Pressure release of 3rd control circuit
- Floating position
- Unpressurized return line, front, including overflow oil line
- Filling of the hydraulic system with environmentally-friendly hydraulic oil; PANOLIN Synt46
- Engine oil and hydraulic oil pre-heating (230 V)
  - only in association with
    - Kohler KDI2504TCR LRC
- Engine pre-heating, fuel, and hydraulic oil (230 V)

Hydraulics

- Floating position
- Unpressurised return line, front, including overflow oil line
- Filling the hydraulic system with environmentally friendly and biodegradable hydraulic fluid

Electrical system

- Reversing alarm (acoustic)
- Pipe-break protection for lift and tilting cylinders
- Warning stripes red / white (according to DIN 30710)
- EquipCare Dual ID
- Immobilizer system, integrated in the ignition switch key
- Fire extinguisher (2 kg)
- Protective measures for use in corrosive environments (use of salt and fertilizer)
- Safety support lifting cylinder
- Tire blow-out protection
- Cardan shaft wrap guard

Safety options

- Central lubrication point
- Special painting in one color according to RAL (gray parts are not included) *
- (Fully automatic) central lubrication unit
  - not with:
    - Protective measures for use in corrosive environments (use of salt and fertilizer)
- Central lubrication system (corrosive environments)
- Salt spreader Polaro 170 l
- Set of tools
- Tool box
  - not with:
    - Warning stripes red / white (according to DIN 30710)
- Combination case (first aid kit, warning triangle, reflective vest)

* We reserve the right to reject paint jobs which show similarities to protected colors or color combinations from other manufacturers.

The illustrations, equipment and data shown may deviate from the current delivery program of your country. Optional equipment subject to additional charge may be shown. Subject to changes.

Copyright © 2026 Kramer-Werke GmbH | www.kramer.de

Paint

- Mitas 340/80-18 (12.5-18) MPT-04 - construction machinery tread profile
- Michelin 400/70 R18 BIBLOAD (restricted steering angle: 38°) - multi-purpose tread profile
- Michelin 340/80 BIBLOAD - multi-purpose tread profile
- Alliance 340/80 R18 Multiuse 550 - municipal tread profile
- Mitas Premium 375/70 R20 AC70G - traction tread profile
- Michelin 340/80 R18 XMCL- multi-purpose tread profile
- Continental 335/80 R20 MPT81 - Multi-purpose tread profile
- Firestone 340/80 R18 Duraforce
- Firestone 405/70 R18 Duraforce

Other

- Security 24 (2000 h)
- Security 36 (3000 h)
- Security 48 (3000 h)
- Security 48 (4000 h)
- Security 48 (5000 h)
- Security 60 (4000 h)
- Security 60 (5000 h)
- Power-Line (24 months or 2000 h)
- Power-Line (36 months or 3000 h)
- Power-Line (48 months or 3000 h)
- Power-Line (48 months or 4000 h)
- Power-Line (48 months or 5000 h)
- Power-Line (60 months or 4000 h)
- Power-Line (60 months or 5000 h)

Extended warranties

- Security 24 (2000 h)
- Security 36 (3000 h)
- Security 48 (4000 h)
- Security 60 (5000 h)

The illustrations, equipment and data shown may deviate from the current delivery program of your country. Optional equipment subject to additional charge may be shown. Subject to changes.

Copyright © 2026 Kramer-Werke GmbH | www.kramer.de