Abraj Energy Services S.A.O.G.

Tender No. STC.260915.WS.8000679

Rate Agreement for Supply of Trailer Mounted Sand Management System & Well Testing Unit Packages

T1, Invitation to tender

1. INVITATION TO TENDER

Abraj Energy Services SAOG "the Company" invites 'Bidder' to Tender for the Work or Services in accordance with the terms and conditions set down in the Tender Documents. If you are a successful Bidder you shall be required to enter into a Contract in accordance with the Form of Agreement.

Tender Name: STC.260915.WS.8000679, Rate Agreement for Supply of Trailer Mounted Sand Management System & Well Testing Unit Packages

Contract Period: 3 Years + 2 Years Optional

The Tender Documents shall comprise the following Sections:

Section 1: Below documents T1, T2, T3 are redundant after award and will not be part of the Contract

T1- Invitation to Tender

T2- Instructions to Bidders

T3- Data to be submitted by Bidders

Section 2: The final Contract Documents after award

C1- Form of Agreement

C2- Standard Terms and Conditions

C3-Special Terms and Conditions

C4-Scope of Work

C5-Schedule of Rates

C6-HSE

C7- ICV – If Applicable

C8- Procedures for Contractors

Proposals shall be submitted electronically through the SAP Ariba System. A submission link will be provided to each invited Bidder. Proposals must be uploaded within the date and time specified in SAP Ariba.

Yours faithfully,

For Abraj Energy Services S.A.O.G.

Abraj Energy Services S.A.O.G.

Tender No. STC.260915.WS.8000679

Rate Agreement for Supply of Trailer Mounted Sand Management System & Well Testing Unit Packages

T2, Instruction to bidders

TABLE OF CONTENTS

1 INSTRUCTIONS TO BIDDERS

ERROR! BOOKMARK NOT DEFINED.

2 ANNEXURE 01: EXPRESSION OF INTEREST 14

3 ANNEXURE 02: INTEREST TO PARTICIPATE IN TENDER & CONFIDENTIALITY DECLARATION FOR TENDER 15

4 ANNEXURE 03: DECLARATION TO COMPLY WITH COMPANY REQUIREMENT 16

5 ANNEXURE 04: FORM OF TENDER BOND (IF APPLICABLE) 19

6 ANNEXURE 05: FORM OF ADVANCE PAYMENT BOND (IF APPLICABLE) 20

7 ANNEXURE 06: CLARIFICATION REQUEST 22

8 ANNEXURE 07: TENDER STRATEGY FOR EVALUATION OF BID 23

9 ANNEXURE 08: TRAINING MANUAL : SUPPLIER RESPONSE FOR EVENT 25

1. INSTRUCTIONS TO BIDDERS

1.1 Tenderer Registration

All nationally registered companies shall submit a copy of a valid Joint Supplier Registration System (JSRS) certificate as a prerequisite to participate in the Tender. Failure to do so will result in the Tenderer being disqualified from participating in the tendering process. Registration can be made online via https://businessgateways.com.

A foreign company wishing to engage in commercial activity in the Sultanate of Oman is required to conform to all registration requirements as applicable to the Work/Services under Omani Law. If a Tenderer is a foreign entity, it shall provide Company with a copy of its local commercial registration or equivalent thereof issued by the competent authorities in its country of registration as part of Tenderer's bid submission. If required under Omani Law, the successful Tenderer shall submit a copy of the Agency Certificate or the Commercial Registration Certificate issued by the Ministry of Commerce and Industry, within 30 working days from the date of the Letter of Award.

Foreign companies, who are not nationally registered with JSRS, and would like to participate in the tendering process, are not required initially to submit a valid JSRS certificate. However, if they are successful in the Tender, the Tenderer shall be required to provide documentary evidence within 7 working days of the Letter of Award/Contract that they have applied for the JSRS certificate. The original JSRS certificate shall be submitted to Company for verification within 2 week's time from the date of the Letter of Award/Contract.

In special circumstances where Company buys Materials or Equipment directly from foreign companies abroad, Company shall review the JSRS registration requirement on a case to case basis taking into account of the quantities and value of the Materials or Equipment required, frequency and other relevant factors, and notify the Tenderers accordingly if application for JSRS certificate is still required at the time of award.

1.2 General

Bidders must notify the Company immediately if they find discrepancies omissions or ambiguities in the description of the services or specifications of goods.

Bidders should note the restrictions set out in the Contract regarding the subcontracting and assignment of any part of the Contract to other companies.

Bidders should also note those terms peculiar to the conducting of services in the Sultanate of Oman, including the requirements set out in the Contract for use of Omani supplies, equipment, machinery, consumables, Omani workers and subcontractors, and the importation of materials, equipment and consumables.

By submitting a Tender, the Bidder is deemed to have made the necessary allowances in the Tender Price for adhering to all laws, rules, regulations, Policies, and procedures applicable in the Sultanate of Oman.

Clarification Requests: All questions or communications regarding this Invitation to tender shall be directed by e-mail to Contract@abrajenergy.com before the clarification closing date.

Any addendums, clarifications or any other correspondence will be issued and sent via e-mail/SAP Ariba to all Bidder during the tendering period.

The Tender Documents and all Tender submissions are to be made in the English language.

1.3 Expression of Interest

The bidder will confirm the Express of Interest (EOI) for the Tender as per Annexure-01 and provide the documents as per following:

To register your interest please complete the forms listed below duly signed by authorized signatory and submitted within three (3) days of reviewing the Invitation to Tender (ITT) to: Contract@abrajenergy.com

1. Annexure-02 Interest to Participate in Tender and Confidentiality Declaration (Form #AES-02) 2. Annexure-03 Declaration to Comply with Company Requirement (Form # AES-03)

1.4 Confidentiality

All recipients of tender documents (whether they submit Tenders or not) shall treat the details of the documents as private and confidential.

During the tender period, the Bidder shall not communicate with anyone related to or deemed to be related to the owner or custodian of the project unless expressly so directed by the Abraj Contract department or where such communication shall constitute an enquiry as set down in these instructions.

1.5 Clarification Requests

All Clarification Requests regarding this Tender shall be submitted by Bidder in the format as included in Annexure 06.

All requests for clarification must be submitted no later than 6 calendar days prior to the bid submission closing date. Any request received after

that deadline may, at the Company's discretion, be declined. Responses to accepted clarification requests will be issued to all tenderers simultaneously.

Any request for extension of the bid submission deadline must be received no later than 6 calendar days before the original bid closing date. The Company (Abraj) reserves the right to grant or reject such extension requests, and if granted will notify all tenderers accordingly.

Addenda to the Tender Documents may be issued prior to the date of delivery of Tenders for the purpose of amending or clarifying the Tender Documents. Should there be any doubt or obscurity as to the meaning of the Tender Documents, or as a request for a site visit, or as to anything to be done under the Contract or concerning these instructions, or any other matter, the Bidder must set forth in writing such doubt or obscurity and deliver the same to Abraj not later than ten (10) working days before the date fixed for the submission of Tenders. If considered appropriate a reply in the form of a Circular Letter or Addendum will be distributed to all Bidders who have obtained the Tender Documents.

Company will endeavour to revert within 2-5 working days from receipt of Clarification submissions.

1.6 Preparation of Bids

The technical Bid should be provide to meet the requirement specified in scope of work.

Any bid exceptions must be attached to the bid. Exceptions to the provisions of the contract will not be accepted by Company for review or negotiation after the bid closing time. Exceptions shall be accompanied by complete information on the nature and extent of the proposed exception and the consequent impacts to the prices, schedule or other aspect of the bid.

Bidders will not be compensated for the cost of preparing a bid, including, without limitation, any travel costs, whether successful or unsuccessful and regardless of whether Company chooses not to award the contract.

Bidders are encouraged to provide any additional information helpful to Company in evaluating their bids.

Bidder shall submit their bid in accordance with Tender documents and provide information as per attached Annexures wherever required.

Bidder shall ensure upon receipt that the copy of the Tender Documents has received in complete and inform if they have not received any of mentioned above to Contract Administration on email address Contract@abrajenergy.com within three (3) days after received of tender invitation.

All copies shall be properly executed, all blank spaces shall be filled in, and any interlineations, alterations, or erasures shall be formally explained and initialed by the Bidder. Failure to comply with these requirements may be cause for rejection of the bid.

Bid may not be considered unless they are in conformity with the Tender Documents. You are specifically advised that evaluation of BID shall include the degree of exceptions taken (if any) to the Body of terms and conditions.

Bidder shall confirm acceptance of the proposed terms and conditions together with any exceptions, clearly shown in the Tender documents. Partial or incomplete BID received after the stated due time may be rejected.

Each Bidder shall give the full legal name, registered number, place of incorporation and registered office address of the Bidder. Where the Bidder operates under any trading name this also shall be stated, as shall be any trading or mailing address if different to the registered office address.

BID shall be written in English and labelled with the name of the part inside.

The Technical Bid shall include, but is not limited to, the following information:-

a. Maximum technical information of all the services or equipment covering the Scope of work as per T3 technical criteria.

b. Specification, brand name, manufacturer name, material detailed, etc.maximum information of each component or part of all equipment or assembly of Equipment.

c. List of Certificates. If possible, sample of certification.

d. Country of Origin of Raw Material and Assembly of equipment.

e. Product drawing or assembly drawing with maximum information.

f. Part Catalogue or Product catalogue.

g. Manufacturer experience detailed.

h. List of Customer to whom you are dealing.

i. Any other information which can be useful for technical evaluation of scope of work as per attached.

j. For any additional Item or scope of work should be specified with optional price.

k. Bidder should provide detailed product specification along with catalogue copy in Technical BID.

l. All items should be supplied as per latest standard of American Petroleum
Institute.

m. This is general standard of the equipment required in Oil and Gas Industries.

n. Purchaser should have right to select line item in the bid.

o. The Technical Tender shall not contain any pricing information.

p. Deviation to our requirement will be marked separately and any change in price will be provided in Commercial bid. Refer to T3

The Commercial Bid shall include, but is not limited to, the following information:-

a. Submit your price for the Tender in accordance with the Price Schedule provided in SAP Ariba.

b. Provide Delivery period. - Abraj expects to get better delivery and the delivery is one of the criteria of commercial evaluation.

c. Provide clear delivery term.

d. Packing charges if any required.

e. Identify the manufacturer of each equipment item or assembled unit, where applicable.

f. Country of origin of each item of Equipment or assembly of Equipment where applicable.

g. Include any further commercial details that support evaluation of the full Scope of Supply or Scope of Services.

h. Commercial Part shall be submitted with prices and rates in US $/OMR taking into account the Works to be executed with terms and conditions included herein.

i. Technical and Contractual Part shall be submitted with the format and content specified hereinafter. No prices shall be indicated in the technical and contractual part.

j. If any deviation included in the commercial part, the bidder shall clarify the cost impact if any against each deviation. The cost impact is the reduction in the rate which the Bidder will provide in case Abraj accepts the deviation request. Refer to T3

1.7 Visit to the Site (If Required)

The Bidder must visit the Site and obtain, at his own expense, all information necessary for preparing a Tender. He must carefully examine the Tender Documents and satisfying himself as to the tasks, risks, obligations and responsibilities to be undertaken in the Contract, form and nature of the entire areas in which the Works are to be carried out, the means of access to the Site and in general all other matters which may affect his tender.

Any neglect or failure on the part of the Bidder to obtain reliable information at Site or elsewhere or on any other matters affecting the execution and completion of the Works of this Contract shall not relieve the accepted Bidder from any risks or liabilities or from the responsibilities of completing and handing over the works.

Abraj Energy Services will arrange a guided Site Visit and a notice to this effect will be issued during the tendering period. The Bidder shall contact Contract Administrator/ Contract Engineer through Email regarding the time and date of the guided Site Visit and bidder has to comply with Abraj HSE policy.

Any of the employees, servants or agents of the Bidder will be allowed by Abraj to enter the site and his premises and land for the purposes of inspection and examination strictly on condition that such persons, firms or companies will indemnify the Company and his servants and agents from and against all liability arising out of any personal injury, fatal or otherwise, loss or damage to property and any other loss directly or indirectly attributable to the said inspection and examination.

1.8 Submission of Bids

The Tender shall be submitted in two part: one comprising a Technical Tender and one containing the Commercial Tender. The Technical Tender shall contain all the required documents requested in the Tender Documents excluding any financial references. The Commercial Tender shall contain all financial documents and information. Bidders who fail to adhere to this requirement will result in the disqualification of their Tender

The Bid Form together with all information and documentation shall be completed and submitted by email only.

The bidder must affix its initialed company stamp to every page of its original Tender submission which should include all parts of the Tender Documents. The original shall be clearly marked “ORIGINAL”

Bidders not complying with the requirements of the Bid Form and the submission and delivery of the bids may be deemed non-responsive to the Invitation to Tender and their bids may be excluded from further consideration.

The Bidders should submit the bids which should be signed by Authorized person of the company and company may verify if it is required from CEO or Owner of bidder or any other Agencies e.g. Chamber of Commerce.

No deletions or erasures may be made in the list of prices and the schedule of categories. Any correction in the prices etc. shall be re-written in numbers and words and signed by the authorized person.

The bidder may not delete or modify any clauses or technical specifications irrespective of the nature of such modification.

Any special conditions or modifications shall be sent in or attached with a separate letter kept in the tender envelope. A reference shall be made to this letter in the bid itself. No other alternative shall be acceptable.

The price schedule shall specify whether the item is manufactured in the Sultanate of Oman or abroad. Inaccuracy of the information submitted, partly or fully, shall lead to the rejection of the item without prejudice to the Abraj Tender Committee's right to deprive the bidder of the facility to deal with other tenders of the Company within a period specified by the relevant Abraj Tender Committee (ATC), depending on the situation of each case.

The prices quoted by the bidder in the schedule of categories shall include and cover all the expenses and liabilities, irrespective of their nature, to be incurred or met in respect of each clause and shall also include those involved in the completion, delivery and maintenance if required, of all the works during the period of guarantee and maintenance.

The final calculation shall be done on the basis of these prices irrespective of fluctuations in the market, the customs duty and other duties and taxes.

The bidder shall, in case of the submission of one or more alternative offer, ensure that these offers are clear and detailed and referred to in the list of contents.

If the bidder fails to specify the price of an item required to be supplied in the price list, this shall be considered as abstention from participation in the tender in respect of such item.

The prices specified in words shall be accepted. As an exception, the relevant may accept the offer specified in numbers only in the Company's interest.

A bid based on a reduction in the lowest bid by a specified percentage shall also not be acceptable.

To submit the Commercial bid, the following shall be taken into account:

a. If the goods are required to be delivered on board the ship, the price given in the bid shall include the price of the items, adding thereto the expenses for mobilization, transportation and loading in accordance with the FOB system.

b. If the goods are required to be delivered at the port of arrival, the price given in the bid shall include the price of the items, adding thereto the expenses for mobilization, transportation, loading and shipping in accordance with the C & F system.

c. If the goods are required to be delivered at the port of arrival, the price given in the bid shall include the price of the items, adding thereto the expenses for mobilization, transportation, loading, shipping, insurance and unloading in accordance with the CIF system.

d. If the goods are required to be delivered at the stores of the purchaser or the work sites, the price given in the bid shall include the price of the items, adding thereto the expenses for mobilization, transportation and loading, the shipment charges, the insurance cost and expenses on unloading, customs duties, internal transportation and other additional charges.

e. In all cases, the contractor shall bear all the expenses for getting the letter of credit from the Company pertaining to their banker while the Company shall bear the letter of credit opening charges pertaining to its banker in Oman.

Bidders accept full responsibility for ensuring their bids are delivered or submitted to the correct Abraj system SAP Ariba by the specified deadline. Bids submitted to any other address or later than the deadline may not be considered.

Bids received after the final bid submission deadline will be returned unopened to the bidder.

Company expressly reserves the right to extend the bid submission deadline.

1.9 Currency of Contract

The currency of the contract will be in Omani Rials (OMR) or US Dollar. In the case of a tender submitted by an individual or companies abroad, it is permitted to write the prices in foreign currency provided the equivalent Oman currency must be mentioned. Tender in foreign currency without the equivalent Oman currency will be rejected.

1.10 Validity of Tenders

The Bid Proposal shall remain valid and irrevocable for a period of **One Hundred and Fifty (150) days** from the closing date for the submission of Tenders. Company intends to notify all Bidder of the result of their

Tender submission during this period. If Bidder retracts or withdraws its Tender during the period of its validity without receiving authorization from Company, Company may, at its sole discretion, without the need for summons, notice or other legal formalities or exercise any other rights stipulated in the Tender Documents.

In exceptional circumstances, prior to expiry of the original, the procuring agency may request the bidders to extend the period of validity for a specified additional period, which shall not be for more than one third of the original period of bid validity. The request and the responses thereto, shall be made in writing. A bidder may refuse the request without the forfeiture of the bid security. In case, a bidder agreed to the request, shall not be required or permitted to modify the bid, but will be required to extend the validity of the bid security for the period of the extension

1.11 Language of Contract

All correspondence with the Company or the Company' representative shall be in the English Language. Original documents or copies submitted by Tenders, which are not in Arabic or English, should be accompanied by English translation.

1.12 No Alterations

No Alterations to the text of the Tender Documents shall be made except for filling in blanks intended to be filled-in. Failure to fully comply with this instruction may result in the rejection of the Tender.

Any alteration to a unit rate or amount made by the Bidder to correct clerical errors entered by him in the Schedule of Prices and Schedule of Rates during the preparation of the tender must be initialed by the person authorized to sign the Tender prior to the submission of tender.

1.13 QHSE Requirements

The Supplier shall comply with all the HSE requirements of Abraj Energy Services (S.A.O.G). As specified while executing the required supply works. Bidder shall fully describe its HSE record for the last three years. This shall include details of accidents and incidents involving Bidder's personnel and third parties for the activities undertaken by Bidder.

1.14 Bidder Registration Requirements

Registration Link, supplier to make sure to successfully obtain their Vendor Code in SAP Ariba. For any registration support, vendor to send Email to: Contract@abrajenergy.com

1.15 Opening of Tenders

Both Technical & Financial Offers will be opened by Abraj in the tender submission platform SAP Ariba.

1.16 Tender Bond

The Bidder must furnish, as part of his Tender, a Tender Bond in the value of not less than 1% of the Tender Value. If the Bidder submits an alternative Tender, the one percent shall be calculated based on the highest Tender Value. The wording of the Tender Bond shall be as per the prescribed Form of Tender Bond included within the Tender Document. See Annexure-04.

The Tender Bond shall be denominated in Omani currency and shall be obtained from a bank located and registered in the Sultanate of Oman and valid for One Hundred and Fifty (150) days from the latest date fixed for the submission of Tenders. Any Tender not accompanied by a Tender Bond will be rejected.

The Tender Bond of unsuccessful Bidders will be returned on its expiration or after the award of the Contract to the successful Bidder.

The Tender Bond will be forfeited:

i) If a Bidder withdraws his Tender during the period of Tender validity specified in the Tender Documents; or
ii) In the case of a successful Bidder, if the Bidder fails:
   a) to sign the Contract; and/or
   b) To furnish the Performance Bond.

1.17 Performance Bond

Company reserves the right to require Tenderer to provide a performance bond for a stipulated value in the stipulated format provided in Annexure 1 of Section C1, as a condition of award obtained from a Bank registered in the Sultanate of Oman, and valid for the whole of the Contract and Defects Liability Period. The Performance Bond will be retained by the Company during the Contract and Defects Liability Period and will be returned to the Supplier upon the satisfactory completion of the Defects Liability Period. The Performance Bond shall be as per the prescribed "Form of Performance Bond" included in the Tender Document.

1.18 Evaluation of Tenders

After received of Bids, Abraj evaluation Team will conduct evaluation of Bid. Technical and Commercial bids will be evaluated separately by different Evaluation Team. Tender evaluation Strategy of bids will be conducted as per Annexure-07.

1.19 Award contract

Abraj reserves the right to reject all of the bids for any reason and not award the Contract to any Bidder.

Abraj reserves the right to award the Contract to a Bidder other than the lowest Bidder and to negotiate any amendment to the terms of the contract with the successful Bidder.

Abraj reserves the right to seek clarification from bidders during the evaluation process. Bids will be evaluated by Company to determine the best qualified and most competitive.

Bidder taking into consideration all aspects of the bid, including but not limited to:

a. The bidder's technical ability to perform the job to Company specifications and the suitability of the proposed equipment, tools, goods, processes and programs.
b. The rates offered.
c. Bidder's financial integrity, past performance, reputation within the industry.

In the event that Company estimates that the bid price exceeds competitive limits, it may request the bidder to reconsider the bid price with the aim to lower the price, and such a request shall not be considered as a rejection or acceptance by the Company until the validity period specified herein.

Notification of Acceptance: By way of a Letter of Intent to Award/ Contract, Company shall notify the successful Bidder of Company acceptance of its Tender subject to the following conditions precedent: Signing of the Contract.

For the purpose of determining the start dates of the Performance Bond and the Insurances, the date of the Letter of Intent to Award / Contract shall be used unless another date is otherwise stipulated in the Letter of Intent to Award/ Contract. If the successful Bidder fails to submit the documentation per (a) and (b) above within the time period stipulated in the Letter of Intent to Award/ Contract, Company may, at its sole discretion, without the need for summons or notice or other legal formalities, exercise any rights stipulated in the Tender Documents, and notify the successful Bidder that the Contract is, ipso facto, terminated. The Effective Date, as entered in the Agreement, shall be determined at the sole discretion of Company.

ANNEXURE - 01 EXPRESSION OF INTEREST

Abraj Energy Services S.A.O.G.	
FROM:	Supply Chain Department
DOCUMENT:	AES-01 / Expression of Interest
TENDER REFERENCE	STC.260915.WS.8000679. Rate Agreement for Supply of Trailer Mounted Sand Management System & Well Testing Unit Packages

Dear Sir/Madam,
You are hereby invited to express your interest (EOI) for the above mentioned tender and confirms the following:

To register your interest please complete the forms listed below duly signed by authorized signatory and submitted within three (3) days of reviewing the Invitation to Tender (ITT) to: Contract@abrajenergy.com

1. Annexure-02 Interest to Participate in Tender and Confidentiality Declaration for Tender
2. Annexure-03 Declaration to Comply with Company Requirement

Please note that all submissions and communications pursuant to this EOI notice shall bear following caption the Tender Reference

Our pre-qualification and tendering processes shall follow your EOI. If we do not receive any response from you on or before the above mentioned date, you will not be eligible to participate in this tender.

Abraj takes this opportunity to wish you all the best and we hope to deal with you soon.

Regards,

Supply Chain Department

Abraj Energy Services S.A.O.G.

ANNEXURE – 02 INTEREST TO PARTICIPATE IN TENDER AND CONFIDENTIALITY DECLARATION FOR TENDER

Abraj Energy Services S.A.O.G.	
FROM:	Supply Chain Department
DOCUMENT:	AES-02 / Interest to Participate in Tender and Confidentiality Declaration for Tender
TENDER REFERENCE	STC.260915.WS.8000679. Rate Agreement for Supply of Trailer Mounted Sand Management System & Well Testing Unit Packages

Attention: Contracts Officer

Dear Sir/Madam,

Having reviewed the Tender Document our company would like to register our interest in bidding for above referenced tender.

We the undersigning party (hereinafter called the 'Bidder') hereby represents and warrants to ABRAJ ENERGY SERVICES SAOG, being a company incorporated under the laws of the Sultanate of Oman having its Head Office at Airport Heights – Building No: 500, Complex No:313 - Way No:1308, PO BOX 1156 AZAIBA 130 Sultanate of Oman Sultanate of Oman (hereinafter called the 'Company') to be unconditionally bound by the following terms and conditions with respect to the receipt, review, and treatment of all information and documents provided to the Bidder by or on behalf of the Company, including but not limited to the Tender Documents, in connection with the Tender Reference mentioned above.

1.1. Confidential Information shall mean all knowledge, data or information in connection with this Tender or the Project, which from time to time may be disclosed to the Bidder by Company, or on behalf of Company, in writing, including drawings, magnetic tapes, computer programs or in any other way, as well as all knowledge, data or information derived there from, to the extent that such knowledge, data or information at the time of such acquisition or disclosure is not either already in the unrestricted possession of Contractor or part of public knowledge or literature.

1.2. Confidential Record shall mean all documents and any other material containing Confidential Information.

2.1. The Bidder shall:

(a) preserve and cause its employees, potential Subcontractors and Manufacturers to preserve the secrecy of any Confidential Information;

(b) not disclose, except with the prior written consent of the Company, to any Third Party any Confidential Information or Confidential Record or enable any Third Party to note the fact that the Bidder has been invited to submit a Tender for the work for any purpose other than the performance of the work or the preparation and submission of a Tender for the work;

(c) not, except with the prior written consent of the Company, reproduce, copy or use, or disclose to, place at the disposal of or use on behalf of any Third Party or enable any Third Party to peruse, copy or use, any Confidential Information for any purpose other than the performance of the work or the preparation and submission of a Tender for the work.

2.2. The Bidder may disclose Confidential Information or Confidential Records as required by law or to a court or tribunal of competent jurisdiction if an order for such disclosure is made and, in those circumstances, only to the extent necessary by law or to satisfy such order for disclosure. The Bidder shall notify the Company prior to any such disclosure and shall provide all reasonable assistance as may be requested by the Company to prevent or minimize such disclosure.

2.3. The undertakings under Clause 2.1 above shall continue so far as the Confidential Information in question has:

(a) not become part of public knowledge or literature, or

(b) not been disclosed to the Bidder by a Third Party (other than one disclosing on behalf of the Company) whose possession of such information is lawful and who is under no secrecy obligation with respect to the same.

3.1. All intellectual property rights, including but not limited to copyright, patents, trademarks, moral rights and industrial design rights in any Confidential Record shall, in the absence of any express provision to the contrary thereon, be vested in the Company.

4.1. In the event that it is decided by the Company that the tendered work will be entrusted to another Bidder, or if the tender process is terminated or suspended by the Company for any reason whatsoever, the Bidder shall, upon receipt of a written notification thereof from the Company, return to the Company the Tender Documents as well as any Confidential Record pertaining thereto and delete any electronic record thereof in Bidder's possession.

5.1. The Bidder shall ensure that if, under the terms of this Confidentiality Declaration, any of the Confidential Information comes to the knowledge of and/or into the possession of any Third Party, the Bidder shall require from such Third Party that it shall abide by identical stipulations to those contained in this Confidentiality Declaration.

5.2. Notwithstanding the above clause 5.1, the Bidder shall at all times remain liable to Company for any breach of the obligations under this Confidentiality Declaration, irrespective of whether or not the disclosure is actually caused by the Bidder or a Third Party to whom the Bidder has disclosed the Confidential Information.

6.1 This Confidentiality Declaration shall be governed by and construed in accordance with the Laws of the Sultanate of Oman.

6.2 In the event of a dispute arising under or in connection with this Confidentiality Declaration, including with respect to the existence, operation or validity of this Confidentiality Declaration, such dispute shall be resolved by arbitration in accordance with the arbitration proceedings and shall be conducted in the English language and the seat of the arbitration shall be Muscat, Sultanate of Oman.

Yours faithfully for:

…….

Signature & date:

……..

Full Name:

……..

Position:

……..

Stamp of Bidder

ANNEXURE – 03 DECLARATION TO COMPLY WITH COMPANY REQUIREMENT

Whereas M/s. …… confirm to comply with company requirements as per below checklist:

Item Description	Required by Company (Yes/No)	Supplier Confirmation (Yes/No)	Comments
Compliance to Abraj Terms and Conditions – C2	**Yes**		
Tender Fees if applicable	**No**		
Bidder to Submit Tender Bond as per clause 2.15 of this document if applicable	**No**		
Bidder to Submit Performance Bond as per clause 2.16 of this document	**No**		
Bidder to Submit Advance Payment Bank Guarantee (if any advance payment requested)	**Yes**		
Bidder to submit Omanisation Certificate (For Local Registered Company)	**Yes**		

Failure to comply with the above checklist will result in Bidder being disqualified from the tendering process.

Agreed and accepted this ..... Day of..... [Insert year]

For and on behalf of Bidder:

ANNEXURE – 04 FORM OF TENDER BOND (IF APPLICABLE)

Abraj Energy Services (SAOG)

Sultanate of Oman

Tender Bond No. .....

By this bond we.....whose address is.....hereby guarantee
Messrs.....
of.....
.... and hold at your disposal the sum of R.O. .....

being .....1% of the Tender Value from ..... until .....a total period of ninety (90) calendar days.

This bond shall be free of interest and payable in cash on your first written demand in the event of the Bidder either withdrawing his Tender within a period of (90) calendar days from the date for the receipt of Tenders or failing to provide a Performance Bond within ten (10) working days of acceptance of the Tender whichever date is earlier without any reference to or contestation on behalf of the Contractor.

This bond should be returned to us upon its expiry or upon fulfilment of our undertaking, whichever is the earlier.

Authorized Signatures

(To be issued by a locally registered bank)

ANNEXURE – 05 FORM OF ADVANCE PAYMENT BOND (IF APPLICABLE)

Abraj Energy Services (SAOG)

Airport Heights – Building No: 500, Complex No:313 - Way No:1308, PO BOX 1156 AZAIBA 130 Sultanate of Oman

Advance Payment Bond No……

Whereas M/s . …… (Hereinafter called the Contractor) has been awarded a

Contract dated ……. for implementation, completion and maintenance of …… Project as described in the contract for the total Contract Price of R.O. …… (Omani Rials ……..…… Only) and in consideration of your making an advance payment of R.O. …….. (Omani Rials …… Only) to the Contractor being (10%) of the Contract Price, by this bond, we …….. whose address is ……..…….…… ……

guarantee to pay you a sum not exceeding R.O. ……. (Omani Rials

…… Only) on your first written demand without any reference to or contestation on behalf of the Contractor.

It is understood that our liability towards you will be progressively reduced by the amount repaid to you by the Contractor as contained in the Certificates and Payment against the said advance payment.

The bond will be effective from …….. and shall be valid until ……, or until the amount of advance payment is fully recovered, whichever occurs later.

This bond should be returned to us upon its expiry or upon fulfillment of our undertaking whichever is the earlier.

Authorised Signatories

(To be issued by a locally registered bank)

Place:

Date:

ANNEXURE – 06 CLARIFICATION REQUEST

Tender Reference: STC.260915.WS.8000679. Rate Agreement for Supply of Trailer Mounted Sand Management System & Well Testing Unit Packages

1	Question Received XX/XX/XXXX **Article X.X.X** … Company Response Dated XX/XX/XXXX …
2	Question Received XX/XX/XXXX **Article X.X.X** … Company Response Dated XX/XX/XXXX …
3	Question Received XX/XX/XXXX **Article X.X.X** … Company Response Dated XX/XX/XXXX …
4	Question Received XX/XX/XXXX **Article X.X.X** … Company Response Dated XX/XX/XXXX …

ANNEXURE - 07 TENDER STRATEGY FOR EVALUATION OF BID

Abraj Management had followed the tendering strategy as per the tender procedure which forms part of the Abraj Tender Policies and Procurement (ATPP).

The process followed was the following: -

1. Tender for purchase of equipment and materials or availing of Services and includes Purchase Order, Service Order or other arrangement will send seeking Technical and commercial bids in two separate sealed envelopes which are submitted in a sealed envelope or electronic mode.

2. The technical bids will be evaluated as per the evaluation process defined below. We have tender opening protocol duly signed by the authorized persons as per ATPP.

3. The Commercial bids will open for the technical qualified bidders only.

4. The Commercial bids will be reviewed and evaluated. The best offer will be awarded the Contract after evaluation and approval from Abraj Management Team.

5. Letter of Intent (LOI) has been issued to the successful bidder followed by execution of Contract wherever required.

Process for Evaluation of bid

The Technical Evaluation Process for the different types of bids will be carried out in the following steps:

1. Opening of the Technical Bids.

2. Analysis of the Technical Bids.

3. Gather all missing information from the technical bids.

4. Sending clarifications to those bidders who have not been disqualified initially.
5. Receive clarifications.

6. Set weightage for scoring based on importance of each evaluation criteria.

7. Evaluate data and score.

8. Finalize Technical Evaluation.

9. Minimum Technical Score to be obtained is **65%** to be Eligible for getting qualified for Commercial Bid Evaluation. For bidders who are technically disqualified, their commercial bid will not be opened.

10. Whoever is technically qualified, all are treated at part for commercial evaluation and L-1 bidder would be awarded the contract. The Company reserves the right to award the contract in the best interest of the company to any bidder other than L-1 without assigning any reason whatsoever.

Technical Methodology

At first, Bidders shall be evaluated on technical proposals in accordance with Evaluation Criteria as described in the Tender Document.

Each of technical proposals shall be evaluated on the basis of the Bidder's degree of compliance, with requirements as specified in the Tender Document including the Specifications. Bidder who achieves the technical evaluation threshold will be evaluated commercially.

ANNEXURE – 08 TRAINING MANUAL: SUPPLIER RESPONSE FOR EVENT

1. SUPPLIER RESPONSE FOR SOURCING PROJECT

1.1. SUPPLIER LOGIN

- Supplier will receive an email to participate in the event
- Supplier will enter their username and password in the supplier login page.

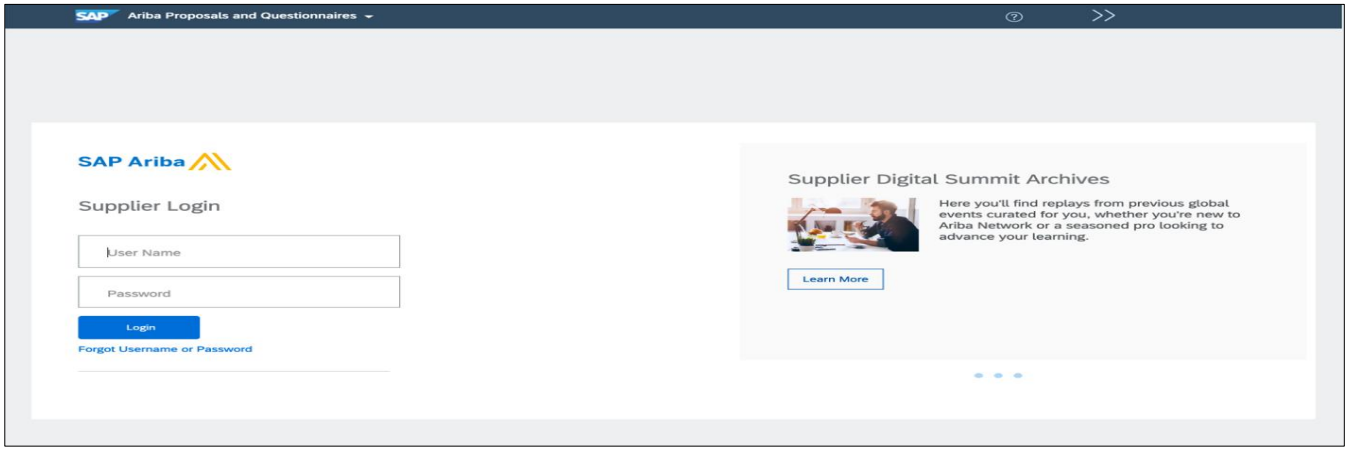

- This will be the landing page after login.
- Select the required sourcing project from the 'Open' drop down

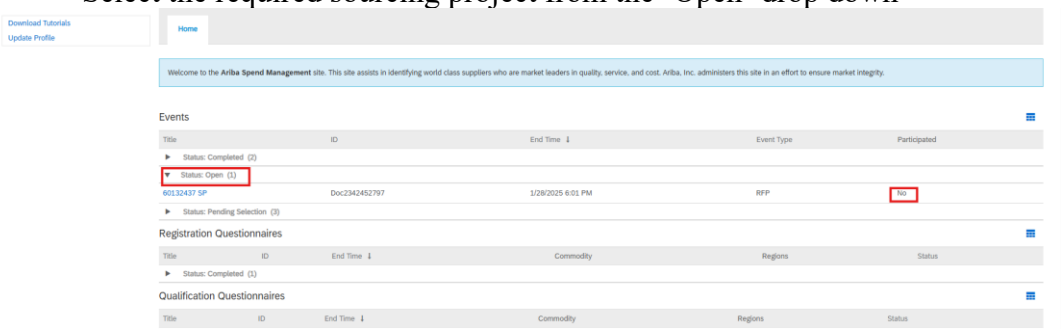

2. RESPOND TO EVENTS

2.1 REVIEW EVENT DETAILS

- If supplier directly login from the mail link, this is the landing page after the login page.

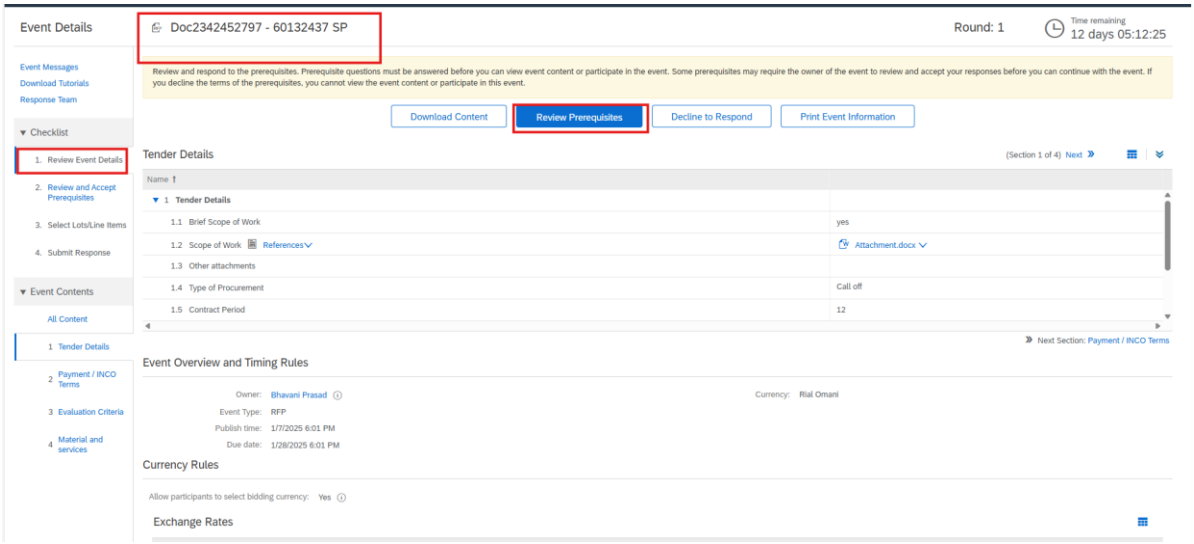

2.2 REVIEW AND ACCEPT PREREQUISITES

- Supplier will click on “Review Prerequisites” to proceed further into the event.

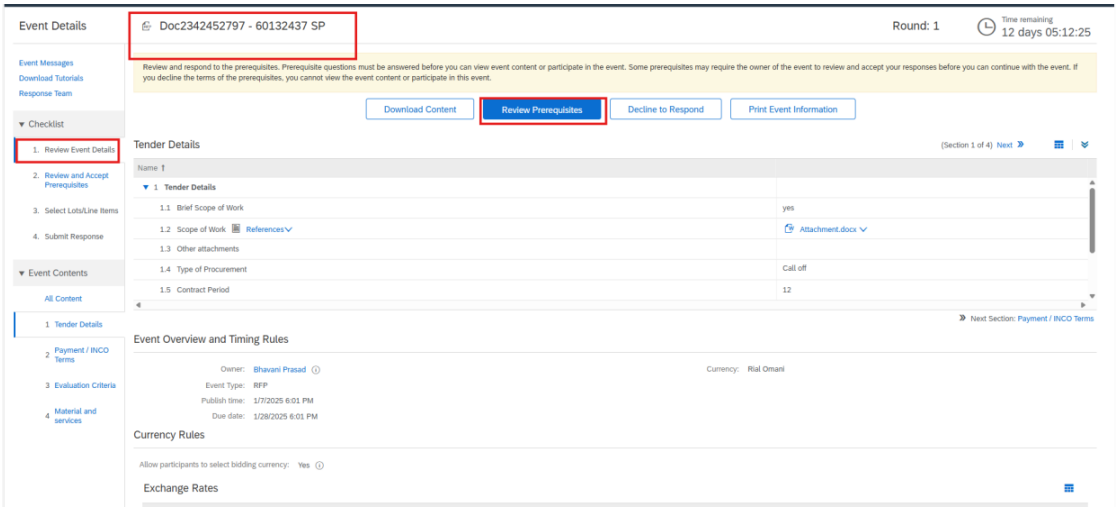

- Supplier has to accept the bidder agreement to proceed to the event. Select “I accept the terms of this agreement” and Click Ok.

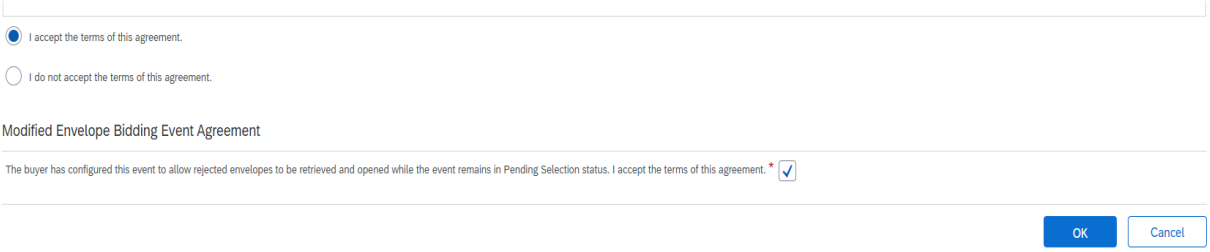

- Click on OK to submit the agreement

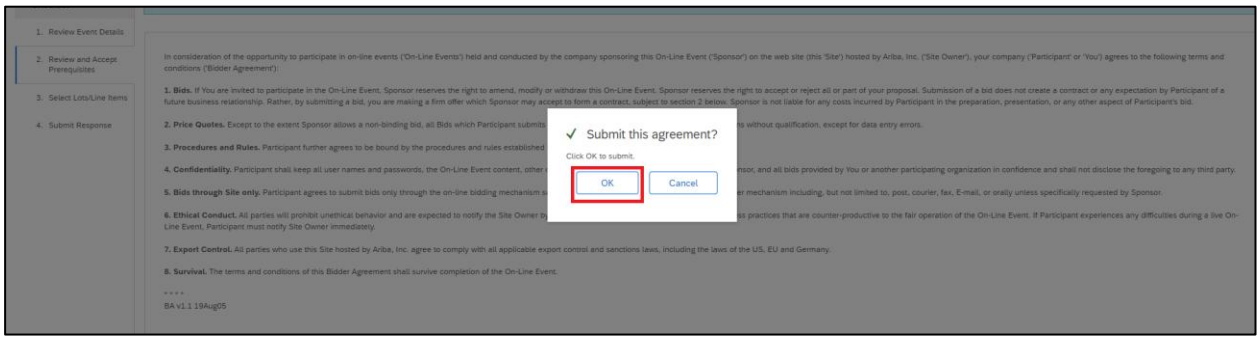

2.3 SELECT LOT OR LINE ITEMS

- Click on 'Select Currency' drop down to select the event bidding currency and Supplier will select the line items and click on "Confirm Selected Lots/line items".

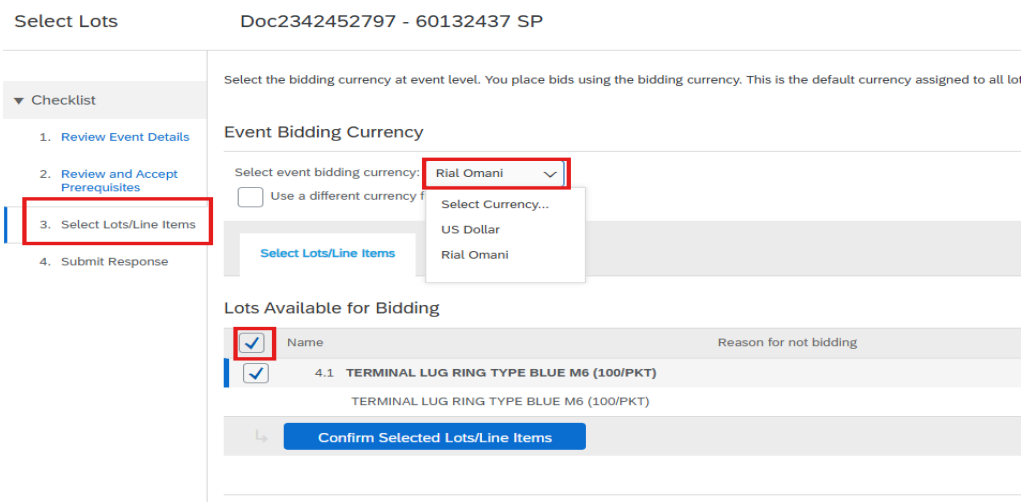

2.4. SUBMIT RESPONSE

- Update the INCO and Payment terms

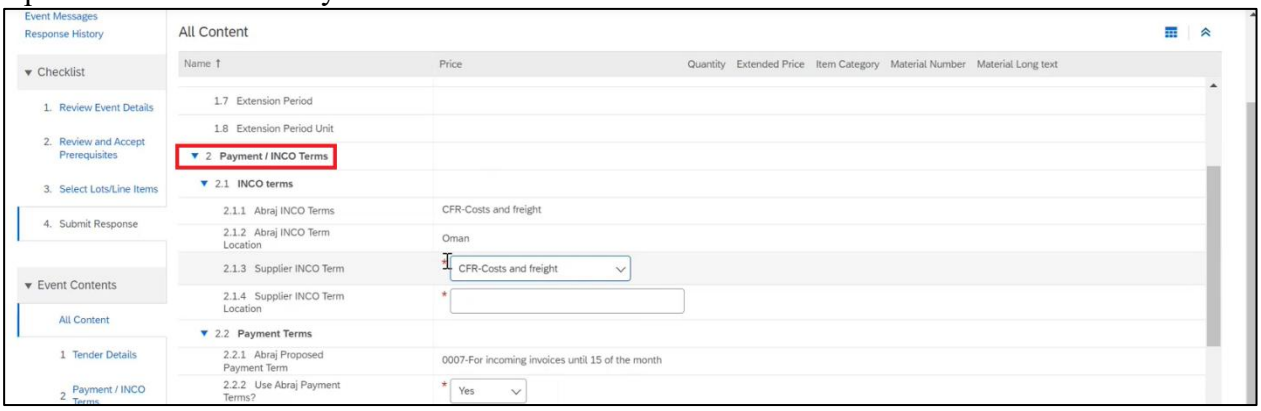

- Fill all the mandatory Technical and Commercial information and click on Submit Entire Response

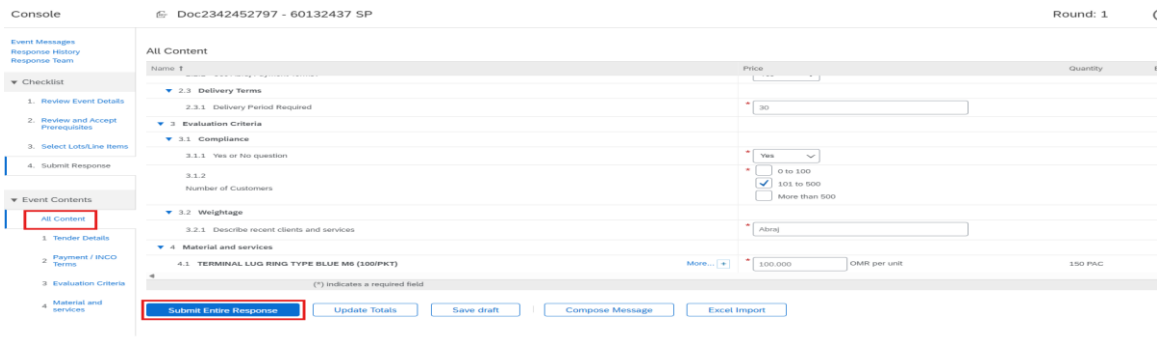

- Click on ‘OK’ to submit the responses

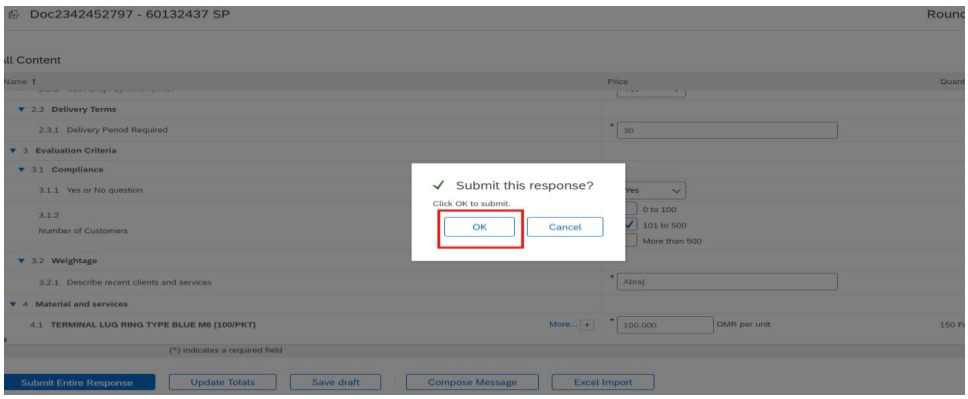

3. SUPPLIER REVISING THE RESPONSE

- Supplier can revise the response by clicking on “Revise Response” button
- Supplier can also send his questions to buyer by clicking on “Compose Message”

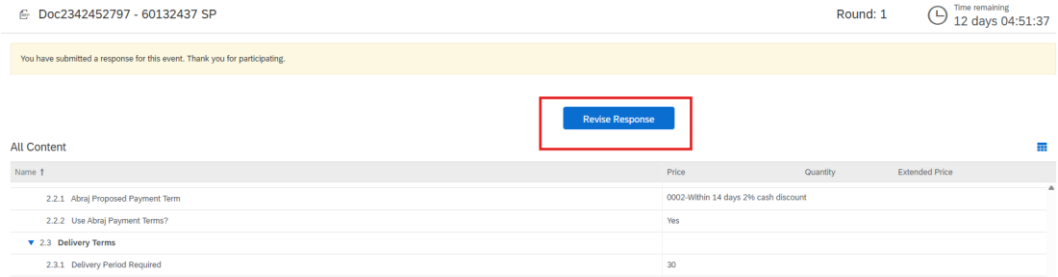

Abraj Energy Services S.A.O.G.

Tender No. STC.260915.WS.8000679

Rate Agreement for Supply of Trailer Mounted Sand Management System & Well Testing Unit Packages

T3, Data to be Submitted by the Bidder

TABLE OF CONTENTS

1	DOCUMENTS REQUIRED TO BE SUBMITTED BY BIDDERS	3
2	ANNEXURE 1: DEVIATIONS FORM-TECHNICAL SUBMISSION	4
3	ANNEXURE 2: DEVIATIONS FORM-COMMERCIAL SUBMISSION	6

Documents Required to Be Submitted by Bidders

At first, Bidders shall be evaluated on technical proposals in accordance with Mandatory Requirements and Technical Weightage Criteria as described below

Each of technical proposals shall be evaluated on the basis of the Bidder's degree of compliance, with requirements as specified in the Tender Document including the Specifications. Bidder who achieves the Technical evaluation threshold will be evaluated commercially.

The evaluation shall consist of

Technical Proposal Evaluation

1. Compliance & Evaluation Criteria

Mandatory Requirements:

No.	Criteria	Yes/No
1	The Bidder shall arrange Third-Party Inspection (TPI) and provide a Certificate of Conformity (CoC).	
2	For Category 1,2 The sand catcher must be manufactured in Oman, with a valid Certificate of Origin provided.	
3	For Category 4 - The Bidder shall provide system architecture drawings, wiring diagrams, I/O lists, cause-and-effect matrix, and software backup.	
4	The Bidder shall confirm the Delivery Period not more than 7 months	

Bidders to ensure to submit documents and evidence for above criteria in their technical bid submission.

Technical Weightage Criteria:

No.	Criteria	Weight Age
1	Delivery Period	50
2	Experience in Manufacturing and Supply in Oil & Gas equipment's	40
3	Warranty Period	10

Cutoff: **65 %**

Financial Proposal Evaluation

Lowest bid ranked highest

Annexure 1: Deviations Form-Technical Submission

As a base requirement, the Bidder's proposal shall fully comply with Abraj's Contract including its Terms and Conditions. No deviations or exceptions shall be considered valid unless expressly stated in compliance with this form and submitted before the bid closing date.

Bidders are advised that Abraj will take into consideration the extent of any exceptions taken by the bidder during the evaluation of the bid.

Deviation form submission instructions:

1. For Fully Compliant Bidders
   If your organization is fully compliant with the Contract including the terms and conditions and its annexures, please keep the table below blank, sign and stamp this document and tick the applicable box at the \\bottom of this form.

2. For Bidders with Exceptions or Deviations
   If your organization has any exceptions or deviation to any part of the Contract including its Terms & Conditions, please provide all exceptions in a Microsoft Word compatible format as a table using the following column structure. The bidder is required to tick the appropriate box at the bottom of this form, and to stamp and sign it.

Clause number	Original clause wording	Exception/ deviation	Reason for Exception/ deviation	Cost impact on price, schedule (YES/NO)

Important Notes:

a) Any deviation request submitted post tender submission deadline will not be considered and may lead to disqualification.

b) The Bidder shall clarify the cost impact if any against each deviation. ONLY INDICATE IN THIS FORM (YES/NO) IF THERE IS COST IMPACT.

The cost impact values in OMR to be filled in **Deviations Form-Commercial Submission**

c) An example for deviation request.

Article #	Article Clause	Exception/ deviation	Reason for Exception/ deviation	Cost impact on price, schedule (YES/NO)
8.1	The Consultant's Fee shall be inclusive of all taxes, levies and assessments pertaining to the Services, but exclusive of value added tax, ……..	State the deviation	Reasons to be filled by the Bidder.	YES

By signing this form, we confirm that we have reviewed the entire Abraj Contract, including Terms & Conditions and annexures and we confirm that:

☐ Our organization is fully compliant with the Contract including the Terms and Conditions and annexures.

OR

☐ Our organization is not fully compliant with one or more provisions of the Contract. Therefore, we have submitted a Deviation Table in compliance with this form, detailing each exception or deviation, along with the reason and any associated cost or delivery impact.

Authorized signatory Name:

Signature:

Date:

Stamp:

Annexure 2: Deviations Form-Commercial Submission

As a base requirement, the Bidder's proposal shall fully comply with Abraj's Contract including its Terms and Conditions. No deviations or exceptions shall be considered valid unless expressly stated in compliance with this form and submitted before the bid closing date.

Bidders are advised that Abraj will take into consideration the extent of any exceptions taken by the bidder during the evaluation of the bid.

Deviation form submission instructions:

3. For Fully Compliant Bidders
   If your organization is fully compliant with the Contract including the terms and conditions and its annexures, please keep the table below blank, sign and stamp this document and tick the applicable box at the bottom of this form.

4. For Bidders with Exceptions or Deviations
   If your organization has any exceptions or deviation to any part of the Contract including its Terms & Conditions, please provide all exceptions in a Microsoft Word compatible format as a table using the following column structure. The bidder is required to tick the appropriate box at the bottom of this form, and to stamp and sign it.

Clause number	Original clause wording	Exception/ deviation	Reason for Exception/ deviation	Cost impact on price, schedule (Price in OMR)

Important Notes:

a) Any deviation request submitted post tender submission deadline will not be considered and may lead to disqualification.

b) The Bidder shall clarify the cost impact if any against each deviation. The cost impact is the reduction in the rate which the Bidder will provide in case Abraj accepts the deviation request.

c) The cost impact will be considered in the Bidder's commercial evaluation.

d) An example for deviation request with commercial evaluation impact;

Article #	Article Clause	Exception/ deviation	Reason for Exception/ deviation	Cost impact on price, schedule (Price in OMR)
8.1	The Consultant's Fee shall be inclusive of all taxes, levies and assessments pertaining to the Services, but exclusive of value added tax, ……..	State the deviation	Reasons to be filled by the Bidder.	A reduction of OMR 3,000 in total price

If Bidder's commercial evaluation resulted to a contract value of = 40,000 OMR, then the impact of deviation will be;

- Final contract value of 40,000 OMR if Abraj did not accept the deviation.
- Final contract value of 37,000 OMR if Abraj did accepts the deviation.

By signing this form, we confirm that we have reviewed the entire Abraj Contract, including Terms & Conditions and annexures and we confirm that:

☐ Our organization is fully compliant with the Contract including the Terms and Conditions and annexures.

OR

☐ Our organization is not fully compliant with one or more provisions of the Contract. Therefore, we have submitted a Deviation Table in compliance with this form, detailing each exception or deviation, along with the reason and any associated cost or delivery impact.

Authorized signatory Name:

Signature:

Date:

Stamp:

Abraj Energy Services S.A.O.G.

And

[Insert]

Contract No. STC.260915.WS.8000679

Rate Agreement for Supply of Trailer Mounted Sand Management System & Well Testing Unit Packages

Dated: September 2026

Abraj Energy Services S.A.O.G.

Contract No. STC.260915.WS.8000679

Rate Agreement for Supply of Trailer Mounted Sand Management System & Well Testing Unit Packages

C1, Form of Agreement

TABLE OF CONTENTS

1	FORM OF AGREEMENT	3
2	COMPANY AND CONTRACTOR REPRESENTATIVES	5
3	APPENDIX-01: CONTRACT SCHEDULE	6
3	ANNEXURE – 01: FORM OF PERFORMANCE BOND	7
4	ANNEXURE - 02: FORM OF ACCEPTANCE CERTIFICATE	9
7	ANNEXURE - 03: FORM OF PURCHASE ORDER	10

Contract No. STC.260915.WS.8000679 Rate Agreement for Supply of Trailer Mounted Sand Management System & Well Testing Unit Packages

This Contract for Supply of Trailer Mounted Sand Management System & Well Testing Unit Packages numbering STC.260915.WS.8000679 (the "**Contract**") is entered into on [DD-MM-2026].

Between:

Abraj Energy Services S.A.O.G., a Public joint stock company incorporated in the Sultanate of Oman, bearing Commercial Registration Number 1/84455/5, and having its registered office at Airport Hights, Seeb, Muscat, Sultanate of Oman, and its postal address at P.O. Box 1156, Post Code 130, (the "Abraj") (the *Company)*

and

[insert] with Commercial Registration Number [insert] and having its registered office at [insert], with a postal address at [insert] (the ***Contractor***),

(Individually a ***Party*** and together the ***Parties***).

WHEREAS

A The Company wishes to purchase Supply of Trailer Mounted Sand Management System & Well Testing Unit Packages.

B The Contractor has held itself out to the Company as having the required resources, expertise and experience to supply the Goods and provide the Related Services on the terms and conditions of this Contract.

C Based on the information provided by the Contractor, the Company has decided to purchase the Goods and procure the Related Services from the Contractor and the Contractor has agreed to such engagement upon and subject to the terms and conditions of this Contract.

D The contract will commence from XX/XX/2026 to XX/XX/2029 subject to other provisions of this contract. The contract may be renewable by the Company for additional 2 Years additional upon its end.

EXECUTED as a contract

EXECUTED by **Abraj Energy Services S.A.O.G.** by		
Director/ Authorised Signatory		Director/ Authorised Signatory
Saif Al Hamhami Chief Executive Officer		Salah Al Harthy Chief Corporate Services Officer

EXECUTED by **[insert]** by		
Director/Authorised Signatory		Director/ Authorised Signatory
Name & Title:		Name & Title:

COMPANY AND CONTRACTOR REPRESENTATIVES

PART A – DETAILS OF COMPANY REPRESENTATIVE

NAME: [insert]

POSITION: [insert]

E-MAIL: [insert]

LANDLINE: [insert]

ADDRESS: [insert]

CELLPHONE NUMBER: [insert]

PART B – DETAILS OF CONTRACTOR REPRESENTATIVE

NAME: [insert]

POSITION: [insert]

E-MAIL: [insert]

LANDLINE: [insert]

ADDRESS: [insert]

CELLPHONE NUMBER: [insert]

APPENDIX 1: CONTRACT SCHEDULE

Item Description	Detailed Particulars
Commencement Date	xx/xx/2026
Original Contract Period	3 Years
Optional Extension Period	2 Years
Value of Performance Bond	28837.46 OMR /USD 75,000

A. Contractor shall at its sole expense obtain a performance bond issued by a reputable bank in Oman, as approved by Company, in the form stipulated in Annexure 1 below and for the sum stipulated in Appendix 1 Above.

B. The performance bond shall come into effect within ten (10) days from the Effective Date and shall be valid until twelve (12) months after the Expiry Date. In no event shall Company be obliged to make any payments to Contractor under the Contract before having received the duly signed performance bond.

C. Contractor shall at its sole expense ensure that the performance bond is amended periodically to reflect any approved extension of the Operational Period or the Warranty Period and shall submit the revised original of such document to Company.

D. In the event Contractor defaults or otherwise fails to perform an obligation under the Contract and, having been given written notice of such default by Company, Contractor fails to remedy such default within a specified or reasonable duration, Company shall have the right, to call on the performance bond to recover the costs incurred by Company due to Contractors default.

ANNEXURE – 01 FORM OF PERFORMANCE BOND

[LETTERHEAD OF BANK]

Guarantee No. [Insert]

[Date]

[Insert Name]

Attention: [Insert]

[Insert Address]

[Insert Address]

Subject: **Bank Guarantee/Performance Bond**

Contract No. [Insert] dated [Insert] between Abraj Energy Services and [Insert Name of Contractor]

WHEREAS, [Insert name of Contractor], having its office at _____ _____(the "Contractor") and Abraj Energy Services S.A.O.G. (the "Company"), have entered into Contract N. [Insert] dated [Insert] (the "Contract") on the condition that the Contractor provides the Company, upon execution of the Contract, an unconditional, irrevocable on-demand guarantee by [Insert Name of the Bank], [Insert Address of the Bank] ("Guarantee") in order to guarantee the fulfilment by the Contractor of all of its obligations under the Contract.

NOW THEREFORE, we, [Insert Name of the Bank], having its registered office at [Insert] (the "Guarantor"), on condition that the Company and the Contractor, in fact, enter into the Contract, do hereby unconditionally and irrevocably undertake and guarantee to pay the Company an amount or amounts up to **28,837.46 OMR /USD 75,000 ,** the exact amount or amounts to be solely determined by the Company, immediately upon first written demand by the Company for any such amount or amounts, notwithstanding any objection or contestation by the Contractor.

The Guarantor hereby waives any right it may have to first require the Company to proceed against or enforce any other rights or other guarantee or security with respect to or claim payment from the Contractor before making a demand against or claiming from the Guarantor hereunder. Furthermore, the Guarantor's obligations hereunder shall not be exonerated by the following described actions, circumstances, matter or thing which, but for this provision, might operate to release or otherwise exonerate the Guarantor from its obligations, including without limitation and whether known or not known to the Guarantor or the Company:

1. Any amendment, modification, extension, indulgence, time, waiver or concession granted to the Contractor, whether as to payment, time performance, or otherwise, under the Contract;

2. Any legal limitation, disability, incapacity or other similar circumstances relating to the Contractor; and/or

3. Any unenforceability or invalidity of any of the Contractor's obligations to be performed by it under the Contract.

This Guarantee shall be governed by and shall be construed in accordance with the laws of [the Sultanate of Oman], except for the conflict of law principles that would cause the laws of another jurisdiction to apply.

This Guarantee shall be valid from the date first above written and shall remain in full force and effect for [insert date or duration]. Upon expiry of the said [date/duration], the Guarantee shall be null and void without the necessity of it being returned to us.

Yours faithfully,

[Insert Name of the Bank],

Signed by: _____

Name: _____

Title: _____

And Authorized Signatory

ANNEXURE 2: FORM OF ACCEPTANCE CERTIFICATE

[To be inserted prior to signing.]

ANNEXURE 3: FORM OF PURCHASE ORDER

Abraj Energy Services S.A.O.G
PO Box 1156, PC 130, Azaiba
Sultanate of Oman
Tel: +968 2450 9999 Fax: +968 2450 9998
CR: 1844555 | www.abrajenergy.com
VAT Reg No:OM1100000554
Email:

ABRAJ

CONTRACT STOCK ORDER

أبراج لخدمات الطاقة ش.م.ع.ع.
ص.ب: 1156 - ر.ب: 130
العزيبة - سلطنة عُمان
هاتف: +968 2450 9999 فاكس: +968 2450 9998
س.ت: 1844555 | www.abrajenergy.com

[redacted]

To: PO Box: PC: Fax: Telephone No.: Abraj Vendor Code: Attn: VAT Reg No : Email:		

Purchase Order No & Version: 000000000 - 00	PO Date: DD.MM.YYYY	PO Status: Released
This purchase order number must appear on all invoices, packing lists, cartons and correspondence.		
Cost Center -		
Our Reference -		
Quotation Reference -		
Freight Forwarder -		
Shipment Mode -		

Storage.Location : R306	PO Currency	Payment Terms

Please process our order as per following terms and conditions -

Item No	Material/ Service Code and Description	Delivery Dt/Store	UOM	Qty.	Unit Price	Amount	VAT Amount
10		DD.MM.YYYY RIG					

Total Value:	Gross Total
	Gross Price
	Sub Total
	VAT
	Net Total

Remarks:

DELIVERY INSTRUCTIONS TO VENDORS

The following instructions should be adhered to, for all material delivered to the shipping address as mentioned on the Purchase Order. Failure to do so may result in non-acceptance of the goods : -

1. Delivery note line item sequence should match Abraj Purchase Order line item sequence.
2. All materials should be packed in acceptable shipping conditions and clearly marked with appropriate Purchase Order Nos., line item number and Part Nos.
3. A copy of the Abraj Purchase Order should be sent along with the Delivery Note to the Freight Forwarder or Abraj Central Warehouse.
4. After delivery of goods to the Freight Forwarder or Abraj Central Warehouse, a copy of the signed / stamped Delivery Order has to be sent via E-mail to the concerned buyer.
5. This Purchase Order along with its terms & conditions supersedes all previous correspondence.
6. Abraj is not responsible for any items shipped against 'Non-Approved' PO's.
7. This purchase order is governed by Abraj Energy's standard terms and Conditions as attached.
8. Provide original invoice as per PO terms & conditions to our Accounts Payable Department.
9. Please contact concerned PO originator for clarifications.
10. International Suppliers : Supplier/Vendor is required to Send/Courier Abraj Energy Services S.A.O.G all Original shipping documents (Commercial invoice with blue wet ink signature and shipper's stamp/packing List with blue wet ink signature and shipper's stamp/Attested Certificate of origin from the chamber of commerce). If not provided then Abraj will deduct customs duty of 2% on the CIF value or a maximum of OMR 500 (USD 1300) in the case of vendor failed in providing the originals of above stated documents or providing them in copies.

Abraj Energy Services S.A.O.G.

Contract No. STC.260915.WS.8000679

Rate Agreement for Supply of Trailer Mounted Sand Management System & Well Testing Unit Packages

C2, Standard Terms & Conditions

TABLE OF CONTENTS

1	DEFINITIONS AND INTERPRETATION	3
2	SCOPE OF THE CONTRACT	7
3	CONTRACTOR'S CORE OBLIGATIONS	7
4	COMPANY'S CORE OBLIGATIONS	10
5	REPRESENTATIVES	10
6	CONTRACT PRICE AND PAYMENT	11
7	TAXES	12
8	DELIVERY, RISK AND TITLE	14
9	COMPANY'S INFORMATION, DRAWINGS AND MANUALS	14
10	INTELLECTUAL PROPERTY RIGHTS	15
11	HSE AND EMERGENCY WORK	16
12	INSPECTION AND TESTING	17
13	ACCEPTANCE CERTIFICATE AND DELAY LIQUIDATED DAMAGES	18
14	DEFECTS	19
15	INDEMNITY AND CONSEQUENTIAL DAMAGE	19
16	INSURANCE	20
17	VARIATIONS	21
18	EXTENSIONS OF TIME	21
19	FORCE MAJEURE	22
20	RESPONSIBILITY FOR LOSS OR DAMAGE RELATING TO DRILLING OPERATIONS	22
21	BLOWOUT PREVENTION	23
22	POLLUTION AND CONTAMINATION	24
23	SUSPENSION	24
24	TERMINATION	25
25	DISPUTE RESOLUTION	26
26	GOVERNING LAW	26
27	ASSIGNMENT AND NOVATION	26
28	CONFIDENTIALITY	27
29	CLAIMS	28
30	NOTICES	28
31	GENERAL	29

1 DEFINITIONS AND INTERPRETATION

1.1 **Definitions:** Words and phrases in this Contract will have the following meanings, unless the context requires otherwise:

Acceptance Certificate means the certificate issued by the Company Representative pursuant to Clause 13.1 and C1

Anti-Corruption and Trade Restriction Undertaking mean the anti-corruption and trade restriction undertaking Clauses 31.2

Blowout means the uncontrolled escape of oil or gas, or both, from any formation.

Business Day means any day of the week (other than Friday, Saturday and statutory holidays) on which registered banks are open for banking business in Oman.

Company Representative means the person identified and listed in Part A of C1 in the Tender Documents, as the representative of the Company, subject to any replacement of such person pursuant to Clause 5.3.

Confidential Information means the terms and conditions of the Contract; any Documents in respect of the Goods or the Related services; and any information acquired directly or indirectly from the Company in connection with the Company (including in connection with any of its operations), the Goods, the Related Services and/or the Contract; whether such items were created, or the information acquired, before or after the date of the Contract.

Consent means any permit, consent, approval, license, authorization or certification obtained from any Government Authority for the Contractor to perform its obligations under the Contract including for the Goods, materials, plant and/or temporary works to be transported, imported or exported and for the performance of the Related Services.

Contract means this Contract (as defined in the opening paragraph hereinabove) inclusive of the Contract Documents.

Contract Documents means the documents listed in Clause 1.3.

Contract Price means the total Contract price set out in C5 in the Tender Documents, payable for provision of the supply of Goods and performance of Related Services (if any) throughout the term of the Contract.

Contractor's Representative means the person identified and listed in Part B of C1 in the Tender Documents, as the representative of the Contractor, subject to any replacement of such person pursuant to Clause 5.5 hereof.

Defect means any defect, error, omission, shrinkage, undue deterioration or other fault in the Goods and/or Related Services and any failure of the Goods and/or Related Services to comply with the Contract.

Delivery Date means means the Goods delivery date(s) specified in the relevant Purchase Order.

Delivery Point means the Goods delivery point(s) specified in the relevant Purchase Order.

Dispute means any dispute, controversy or claim arising out of or in connection with the Contract, including any question regarding the existence, validity or termination of the Contract.

Documents means all drawings, specifications, reports, manuals, programmes, plans, aids, software, results, studies, calculations, data and any other documents or technical information (whether in physical or electronic form) prepared or used during the performance of the Contract.

Effective Date means the date on which the Parties have signed and dated the Contract.

Encumbrance means any mortgage, lien, pledge, claim, charge, retention of title, security or encumbrance of any kind.

Force Majeure means an exceptional event or circumstance:

(a) that is beyond the affected Party's reasonable control;

(b) which was not reasonably foreseeable by the affected Party on the Effective Date;

(c) which was not caused by any breach or negligence of the affected Party or any person or entity for whom the affected Party is responsible; and

(d) the effect of which could not have been substantially prevented, avoided or overcome or mitigated by the affected Party by:

  (i) implementing any contracted business continuity or disaster recovery service, or any contingency plans agreed between the Parties or which the affected Party has represented it has in place;

  (ii) in the case of the Contractor, exercising Good Industry Practice; and/ or

  (iii) using information provided by the unaffected Party or which is available in the public domain,

provided that:

(e) a lack of funds;

(f) in the case of the Contractor where it is the affected Party, late performance by a Subcontractor (unless such late performance by a Subcontractor would be excused if the Subcontractor was the Contractor under the Contract); and

(g) in the case of the Contractor where it is the affected Party, the occurrence of any shortage of equipment, materials, components, personnel or other resources;

will not be, nor be deemed to be, Force Majeure.

Goods means the goods set out in C4 in the Tender Documents.

Good Industry Practice means, without limiting or prejudicing any higher standards or requirements under the Contract, compliance with all applicable Laws, and the exercise of that degree of skill, diligence, prudence (including good, safe and prudent practice) and foresight that would reasonably be expected to be observed by a skilled and experienced contractor engaged in carrying out activities or undertaking the same as or similar to the Contractor's activities and undertakings under the Contract.

Government means the government of Oman.

Government Authority means the Government or any sub-division of it and any ministry or governmental, quasi-governmental, oil and gas, environment or industry regulatory department, body, instrumentality, agency or authority of Oman or of any sub-division of any of them having jurisdiction over: (i) this Contract, (ii) the Parties, and (iii) any asset or transaction contemplated by this Contract and/or the activities of the Contractor.

Intellectual Property Rights means:

(a) patents, trademarks, service marks, rights in design, trade names, copyrights and topography rights, in each case whether registrable, registered or not;

(b) applications for registration of any of them;

(c) rights under licences and consents in relation to any of them; and

(d) all forms of protection of a similar nature or having equivalent or similar effect to any of them which may subsist anywhere in the world.

Joint Venture has the meaning given to it in Clause 31.13.

Law means:

(a) any Royal Decree, regulation, ministerial decision, by-law, ordinance or subordinate legislation in force from time to time in Oman to which a Party is subject;

(b) any binding court order, judgment or decree;

(c) any applicable industry code, policy or standard enforceable by law; or

(d) any applicable direction, policy, permission, consent, licence, rule or order that is binding on a Party and that is made or given by any governmental, legal or regulatory body in Oman having jurisdiction over a Party or any of that Party's assets, resources or business,

in any jurisdiction that is applicable to the Contract.

Liquidated Damages means an amount specified in C5 in the Tender Documents of this Contract.

Oman means the Sultanate of Oman.

Purchase Order means the document substantially in the form attached as Schedule 3 issued by the Company to the Contractor for the supply of Goods and/or the performance of one or more Related Services in accordance with the terms and conditions of this Contract and which shall mention, inter-alia, the Delivery Date(s), the Delivery Point(s) and the specifications of the Goods and/or the nature of the Related Services require, Sample in C1

Related Services means the additional services, the scope of which is listed in in C4 in the Tender Documentshereto, to be performed and completed by the Contractor to the Company in accordance with the scope and timeframe set out in the Purchase Order.

Specifications means the Goods and Related Services' description and specifications set out in C4 in the Tender Documents.

Subcontractor means a subcontractor of the Contractor of any tier and, likewise, ***Subcontract*** means a subcontract of any tier.

Tender Documents means the documents submitted by the Contractor in response to the Company's request for tender for the Contract.

Testing and Commissioning Programme and Procedure has the meaning given to it in Clause 12.4.

Variations has the meaning given to it in Clause 17.1.

Warranty Period means the period specified in C4 in the Tender Documentscommencing after the date of the issuance of the Acceptance Certificate, subject to any extension under Clause 14.3.

1.2 **Interpretation:**

In the Contract, except where the context requires otherwise:

(a) a reference to a person or entity will include a reference to individuals, sole proprietorships, firms, trusts, bodies corporate, unincorporated associations, partnerships, an individual's executors or administrators, and government, local and central bodies and authorities;

(b) a reference to any monetary amount is to the Omani Riyal (OMR) currency;

(c) a reference to a person or Party (including the Company and the Contractor) includes reference to the person's successors, permitted novatees and permitted assigns;

(d) references in the Contract to any Laws will include and refer to any replacements, amendments, modifications or supplements thereto;

(e) the words "include" or "including" will be deemed to be followed by "without limitation" or "but not limited to" respectively, whether or not they are followed by such phrases or words of like import;

(f) the headings and subheadings in the Contract are for convenience only and will not affect its interpretation;

(g) a reference to a Clause or Schedule is a reference to a Clause or Schedule of the Contract;

(h) where a word or expression is defined in the Contract other parts of speech and grammatical forms of that word or expression have a corresponding meaning;

(i) anything required by the Contract to be done on a day which is not a Business Day may be done on the next Business Day;

(j) the singular includes the plural and vice versa, and words importing one gender include the other genders; and

(k) references to time are to Gulf Standard Time.

No rule of construction (including the contra proferentem rule) applies to the interpretation of the contract to the advantage or disadvantage of any one Party on the basis that a Party prepared the contract or any relevant part of it.

1.3 **Contract Documents**

The Contract Documents are comprised of the following (listed in descending order of precedence) which together form the Contract:

C0- Cover Page

C1- Form of Agreement

C2- Standard Terms and Conditions

C3- Special Terms and Conditions

C4- Scope of Work

C5- Schedule of Rates

C6- HSE

C7- ICV If Applicable

C8- Procedures for Contractors

The Contract Documents (and all parts thereof) are intended to be correlative, complementary and mutually explanatory of one another, and the Contract must be read as a whole. However, if there is any ambiguity, conflict or inconsistency between or within the Contract Documents, the order of precedence will be the order in which the Contract Documents are listed above, provided however that the Special terms and conditions is to take precedence over the General Terms and Conditions and if the Contract Documents provide for differing standards of quality, performance, product, workmanship or finish, the Contractor must provide those of the highest standard unless the Company agrees otherwise in writing.

2 SCOPE OF THE CONTRACT

The Contract sets out the terms and conditions on which the Contractor will supply the Goods and perform the Related Services.

3 CONTRACTOR'S CORE OBLIGATIONS

General

3.1 The Contractor will supply the Goods and perform the Related Services and discharge all of its obligations under the Contract in accordance with:

a) the Contract;

b) the scope of the Related Services;

c) Good Industry Practice;

d) all applicable Laws; and

e) any instructions issued by the Company Representative in accordance with the Contract.

Warranties and Representations

3.2 The Contractor warrants to the Company that:

a) it has full power and capacity to execute this Contract and to supply the Goods, perform the Related Services and discharge its obligations under the Contract;

b) each of the Contract Documents constitutes a valid and legally binding obligation of the Contractor enforceable in accordance with its terms and conditions;

c) the execution, delivery and performance of each Contract Document will not (i) contravene any Law, nor (ii) result in any breach of or default under any agreement or other instrument to which the Contractor is a party or is subject;

d) it has, prior to the Effective Date, carefully considered, examined and scrutinised the Specifications and the scope of the Goods and Related Services and has fully satisfied itself with the same;

e) it will deliver the Goods on or by the Delivery Date and it will perform the Related Services in accordance with the timeframe set out in the Purchase Order and it will otherwise proceed in a regular and diligent manner;

f) it will provide and maintain appropriately skilled, competent, qualified and experienced personnel in appropriate staffing levels to properly discharge its obligations under the Contract;

g) the Goods will incorporate only new and unused components and materials of the quality specified in the Specifications (to the extent not specified in the Specifications, in compliance with Good Industry Practice);

h) the Goods will be properly packed, secured and labelled in accordance with Good Industry Practice and to meet any of the Company's own requirements as the Company may direct;

i) the Goods will be fit for the purposes described in or reasonably able to be inferred from the Contract; and

j) the Goods will be free of any Defects at the time of issuance of the Acceptance Certificate.

No warranty in the Contract will limit any other warranty.

3.3 The Contractor will at its own cost and risk, promptly, in a good and workmanlike manner, and to the satisfaction of the Company repair all defects in the Goods during the Warranty Period.

Consents

3.4 The Contractor will obtain all Consents required for the discharge of its obligations and performance of the Related Service under the Contract.

Subcontracting

3.5 The Contractor may only subcontract the performance of any of its obligations under the Contract with the Company's prior written consent, which consent may be given or withheld at the sole and absolute discretion of the Company. The Contractor will remain fully responsible for the performance of any obligations that have been

subcontracted, and the Contractor will be responsible for the acts, omissions and defaults of every Subcontractor (notwithstanding that the Subcontractor may have been approved by the Company), including their employees and agents, in relation to or in connection with the Contract as if they were the acts, omissions or defaults of the Contractor (all such acts, omissions and defaults will be deemed to be acts, omissions and defaults of the Contractor), and the Contractor will remain responsible for the discharge of all of its obligations and duties under the Contract.

Personnel

3.6 The Contractor warrants that its personnel will be fully skilled, competent, qualified and experienced in the field and/or position assigned to them for the supply of the Goods and the performance of the Related Services.

3.7 The Contractor will remove from the Contract any employee, or employee of a Subcontractor, whom the Company Representative reasonably considers is acting in an incompetent or negligent manner or is a danger to health and safety.

Reporting

3.8 The Contractor must:

a) promptly provide any other information requested by the Company (acting reasonably) from time to time; and

b) notify the Company in writing as soon as it becomes aware of any matter that could impact on the Contractor's ability to deliver the Goods on or by the Delivery Date or perform the Related Services.

Spares

3.9 The Contractor will endeavour to guarantee the continuous supply of spare parts and/or replacement materials for the Goods for a minimum period as specified in Schedule 3. Such period shall start from the issuance of the Acceptance Certificate. In the event such parts or materials cannot be procured by the Contractor using best endeavours or such parts or materials produced by a third party come out of production, the Contractor shall (subject to the Company's approval) procure a suitable replacement and perform any modification to the Goods as may be required.

Related Services

3.10 Where required in the Purchase Order as part of the Related Services, the Contractor shall provide all labour, equipment and materials, and shall secure all Consents necessary for the supply of Goods. The Contractor shall indemnify the Company, its affiliates, and their respective directors, officers, employees, agents and representatives from and against all liability arising from or in connection with the Contractor's failure to obtain such permits and licenses.

3.11 The Contractor shall be solely responsible, at its sole cost and expense, for all wages, salaries, costs, expenses, contributions and charges of any kind which accrue to its personnel and/or its agents and subcontractors' personnel, arising out of or incidental to the supply of Goods and performance of Related Services, including:

a) the provision of the required safety equipment and medical attention; and

b) all benefits of any kind which include overtime, vacation, severance, rest and holiday pay, as well as compensation due to accidents, sickness, disability and death of such personnel,

and the Contractor shall indemnify, defend and hold harmless the Company and its affiliates, and their respective directors, officers and employees, from and against all liabilities, demands, claims and expenses of any kind arising from or in connection with the provision of labour for the performance of the Related Services.

3.12 Upon written request by the Company, the Contractor shall promptly remove any personnel engaged in the supply of Goods and performance of the Related Services from the relevant site whom the Company deems to be incompetent, disorderly or otherwise performing below the standards required under the Contract, and a replacement acceptable to the Company shall be promptly provided by the Contractor. The cost of any such removal and replacement, including any labour liability of any kind shall be at the Contractor's sole cost and expense.

4 COMPANY'S CORE OBLIGATIONS

As complete and full compensation for the fulfillment by the Contractor of all its obligations under the Contract, the Company will pay the Contractor the Contract Price instalments at the times and in the manner set out in the Contract.

5 REPRESENTATIVES

Company Representative

5.1 The Company will be represented at all times by the Company Representative.

5.2 All agreements, approvals, directions, instructions and the like to be given by the Company to the Contractor will be given by or through the Company Representative and these will be binding on the Company, except that the Company Representative is not authorised to:

a) waive any term or condition of the Contract or any right or remedy of the Company under the Contract;

b) release, discharge or relieve the Contractor from any obligations or liabilities under the Contract;

c) suspend the supply of the Goods or performance of the Related Services (except for urgent and justifiable reasons relating to health, safety and/or the environment); and/ or

d) terminate the Contract.

5.3 The Company is entitled to replace the Company Representative at any time and will notify the Contractor immediately if it does so.

Contractor Representative

5.4 The Contractor will be represented at all times by the Contractor's Representative and all acts and omissions of the Contractor's Representative will be binding on the Contractor.

5.5 The Company will be entitled, at any time, to object to the Contractor Representative. The Contractor shall use its best endeavors to satisfy the objection raised by the Company. Should the Company's objection not be satisfactorily addressed at the sole discretion of the Company within Five (5) Business Days of the date the objection, the Contractor shall immediately appoint another appropriately qualified and experienced Contractor Representative upon notification to the Company.

6 CONTRACT PRICE AND PAYMENT

Contract Price sufficient, fixed and firm

6.1 The Contractor acknowledges and agrees that it has, and will be deemed to have, satisfied itself as to the correctness and sufficiency of the Contract Price, which covers all of the Goods and Related Services and the discharge of the Contractor's obligations under the Contract. The Contract Price is fixed and is not subject to any adjustment of any kind except as expressly provided for otherwise in the Contract.

6.2 Subject to the issuance of the Acceptance Certificate by the Company for the Goods supplied , the Company will pay the Proportionate Contract Price for such Goods and Related Services as provided for by a Purchase Order against the Contractor's itemised invoice(s) within the period specified in C5 in the Tender Documentsof this Contract. Sixty 60 days of receipt of the Contractor's invoice(s). Each invoice shall be supported by documentation to the Company's satisfaction.

6.3 If the Company disputes any items referred to in any invoice in its entirety or in part, or if the invoice is prepared or submitted incorrectly in any respect, the Company shall notify the Contractor of the reasons for its rejection of the invoice (or a part thereof) and request the Contractor to issue a credit note for the rejected part or whole of the invoice as applicable. Upon receipt of such credit note the Company will pay the undisputed part of the relevant invoice.

6.4 Upon settlement of any disputed invoice item, the Contractor shall submit a revised invoice for sums due and the Company shall make payment in accordance herewith.

6.5 No interest whatsoever shall be payable by the Company on any overdue amount under this Contract.

6.6 Neither the acceptance nor payment or non-payment of an invoice shall constitute an admission of any liability or obligation on the part of the Company with respect to the invoiced amount nor shall any such action constitute a waiver of, or affect, the rights of the Company under the Contract against the Contractor.

Set-off, deduction and withholding

6.7 The Company may, in addition to any other rights of set-off available to it under Law, deduct, withhold or set-off:

a) any payment due to the Contractor under the Contract including:

(i) any debt or other moneys due from the Contractor to the Company; and/ or

(ii) any genuine claim to money that the Company may have against the Contractor whether for damages or otherwise, and

b) any payment due to the Contractor under the Contract such amount as it deems reasonably necessary or appropriate because of any one or more of the following reasons:

(i) Defects, whether or not payment has been made therefor; and/ or

(ii) any overpayment made by the Company with respect to any previous payment.

7 TAXES

7.1 The Price(s) which Company has agreed to pay for the Work is set out in C5 in the Tender Documentsof this Contract and is inclusive of all taxes, duties or other charges, but exclusive of Value Added Tax, and shall be firm and fixed unless otherwise agreed in writing by Company; provided however, that Company shall receive the benefit of any general reductions in Contractor's prices prior to performance of the Work.

7.2 Should any applicable law require withholding taxes, but not Value Added Tax, from payments to Contractor, Company shall deduct such amounts to be withheld from the payment due to Contractor and shall remit the amount withheld to the proper tax authorities, unless Contractor demonstrates, to Company's satisfaction, exemption from such withholding. Any amounts withheld by Company shall be deemed part of the compensation paid to Contractor. Contractor shall complete, sign and return to Company any forms regarding withholding or other taxpayer information that Company requests from and supplies to Contractor. Company shall provide Contractor evidence of any amounts withheld and remitted to the requisite tax authorities.

7.3 For the purpose of clause 7.2, the following shall have the following meaning:

- **Value Added Tax (VAT)**
  Including without limitation value added tax, goods and service tax, sales tax or any similar tax as applicable to the contract and the supplementary documentation issued thereunder, including but not limited to invoices, credit notes, debit notes and similar, in accordance with the prevailing laws of the Sultanate of Oman, including any transitional VAT legislative provisions

- **Tax Authority**
  The designated government agency that is responsible for managing, collecting and enforcing the relevant tax or any similar competent authority and relevant ministry under which it operates.

7.4 To the extent that the goods and services provided under the Contract are subject to VAT, the Contractor shall add VAT to the Contract Price or Service Fee at the prevailing rate as applicable such that the stated prices shall be considered exclusive of VAT. Where appropriate the Contractor shall apply any VAT exemption or subject the supply to zero-rated VAT, whichever may be applicable.

The VAT for such supply will be calculated as follows:-

- A x R, Where:
  A is the Contract Price or Service Fee payable for the supply
  R is the applicable rate of VAT.

A. Company shall pay the Contract Price or Service Fee plus VAT to the Contractor following receipt of a valid tax invoice which is in accordance with the prevailing VAT Law

B. Payment of VAT to the (Supplier/Contractor) will not be processed and released by Abraj in the absence of a valid VAT invoice.

C In the event that the Contractor has incurred or will incur costs and expenses, and where some or all of these costs and expenses are or will be recharged to Company separately to compensation for services, and there has been or will be VAT incurred on these costs and expenses, then the recharges shall be as follows:-

1) If after employing reasonable efforts and procedural and legal compliance, the Contractor does not have a right to recover this VAT from the relevant tax authority, whether through filing of a local VAT return or other scheme or mechanism, then the value of the recharges shall be calculated as inclusive of the VAT that was incurred.
2) In all other cases, including where the Contractor does have a right to recover this VAT from the relevant tax authority, then the value of the recharges shall be calculated without including the VAT that was incurred.

D. For the avoidance of doubt, it shall at all times remain the sole responsibility of the Contractor to:-

1) Assess the VAT rate(s) and VAT liability arising out of or in connection with the Contract.
2) Account for or pay any VAT (and any other tax liability) relating to payments made to the Contractor under the Contract to the relevant Tax Authority.
3) To the extent the supplies made by Contractor is zero rated according to the Oman Law and Regulations, Company will provide the necessary document/s and/or certification/s to satisfy Contractor of the zero-rating VAT treatment.

E. Company shall not be liable to the Contractor in any way whatsoever and shall have recourse in regard to any error or failure made by the Contractor in relation to VAT, including without limit:-

1) Where the Contractor is subject to a VAT ruling(s), determination, announcement or generally accepted practice in connection with the Contract
2) Where the Contractor has applied the incorrect rate of VAT, for whatever reason, and this application is subsequently held to be incorrect or invalid
3) Where the Contractor's treatment of VAT in respect of any claim for payment made under the Contract is subsequently held to be incorrect or invalid

8 DELIVERY, RISK AND TITLE

Delivery

8.1 Delivery of the Goods to the Company will be made at the Delivery Point.

Risk

8.2 Risk in the Goods to be supplied by the Contractor will transfer to the Company upon the issuance of the Acceptance Certificate for the Goods.

Title

8.3 Title to the Goods will transfer to the Company when the first payment is made in accordance with the terms and conditions of the Contract.

8.4 The Contractor warrants that on transfer of title to the Company, the Company shall have full and absolute title to the delivered Goods, free of all and any Encumbrances of whatsoever nature.

No damage to property

8.5 The Contractor will not damage any public or private property during the performance of the Contract. If the Contractor or any Subcontractor directly or indirectly causes any damage to any such property, then the Contractor will immediately, at its own cost, repair, rebuild or otherwise restore the same and shall indemnify and hold the Company harmless against any costs, expenses, claims or proceedings arising from such damage.

9 COMPANY'S INFORMATION, DRAWINGS AND MANUALS

Company's information

9.1 The Contractor warrants and represents that it has, prior to the date of the Contract, carefully examined, considered and scrutinised the Specifications and the scope of the Related Services and has fully satisfied itself with the same.

No warranty

9.2 The Company does not warrant the accuracy, completeness and fitness for purpose of any information provided by it or may be provided by or on behalf of it to the Contractor at any time in relation to or in connection with the supply Goods, the performance of the Related Services and/or the Contract. The Contractor must not

rely on such information, or claim to have relied on the same, at any time, and the Company will have no liability whatsoever to the Contractor arising from the provision or use of such information.

Operation and maintenance manuals

9.3 The operations and maintenance manuals will be in sufficient detail to enable the Company to operate and maintain the Goods.

9.4 The operation and maintenance manuals will be provided to the Company in both English and Arabic, if needed, prior to and as a pre-condition to the issuance of the Acceptance Certificate.

10 INTELLECTUAL PROPERTY RIGHTS

Ownership of new Documents

10.1 All Documents produced or prepared by or for the Contractor (including by any Subcontractor) in the course of or as a result of the performance of the Contract, will be the exclusive property of the Company, and, for the avoidance of any doubt, the Company may use and disclose the same freely without reference to or consent of the Contractor or any other person or entity. The Contractor will not use any such Documents for any purpose other than the performance of the Contract. The Contractor will ensure that it secures all necessary rights from its suppliers in order to ensure that exclusive property in the said Documents vests in the Company in the manner set out in this Clause 10.1.

Company's license to use existing Documents

10.2 With respect to all Documents used by the Contractor in connection with the Contract that are not produced or prepared by or for the Contractor in the course of or as a result of the performance of the Contract, the Contractor (both for itself and on behalf of the applicable Subcontractors) hereby grants to the Company and its advisers and contractors an irrevocable, transferable (including by way of sublicense(s)), perpetual, unconditional, non-exclusive, royalty-free licence and right to copy and use all such Documents for the Goods, including for the planning, design, engineering, procurement, assembly, installation, testing, commissioning, completion, operation, maintenance, modification, repair, renewal, expansion and/or alteration of the Goods, as well as for the ongoing business operations of the Company. The Contractor will ensure that it secures all necessary rights and licenses from Subcontractors for the discharge of its obligations under this Clause 10.2.

Formalities and delivery of Documents

10.3 The Contractor will execute or procure the execution of such documents and do all such things as may be necessary or reasonably desirable in the Company's opinion to give effect to the provisions of Clauses 10.1 and 10.2. The Contractor will also promptly deliver to the Company all Documents in respect of the Goods that the Company may from time to time request.

Infringement

10.4 The Contractor warrants to the Company that:

a) the Contractor, all Subcontractors, and, in each case, their respective employees and agents, will not infringe the Intellectual Property Rights of any person or entity in the course of performing the Contractor's obligations under the Contract; and

b) the Goods will not depend for its existence upon any infringement of the Intellectual Property Rights of any person or entity and may be used and (where applicable) operated by the Company or any other person or entity without any infringement of the Intellectual Property Rights of any person or entity.

10.5 The Contractor will indemnify the Company and its affiliates, directors, officers, agents and representatives against any claim, loss, damage or liability incurred by the Company or the Company Representative in respect of any infringement of the type referred to in Clause 10.4, as well as in respect of any costs the Company and/or its affiliates, directors, officers, agents and representatives may incur in respect of the same.

11 HSE AND EMERGENCY WORK

Health, safety and environment

11.1 During the supply of the Goods and performance of the Related Services, the Contractor will be responsible for:

a) providing all necessary information to the Company and relevant third parties in respect of any potential hazard associated with the supply and/or operation (as the case may be) of the Goods;

b) protecting the environment; and

c) implementing best industry practice health, safety and environmental measures.

11.2 Without limitation or prejudice to Clause 11.1, the Contractor shall take all practicable steps to ensure that no act or omission:

a) causes a hazard, significant hazard, harm or serious harm to any employee of the Contractor or any other person at the Delivery Point or any other place in the vicinity of the Delivery Point;

b) results in a breach of any duty or obligation of the Contractor under all applicable Law; or

c) does or is likely to give rise to any proceedings or a prosecution under all applicable Law against the Company, the Contractor or any other person or entity,

and the Contractor further undertakes that it, and that each person it engages in relation to the supply of the Goods or performance of the Related Services, is aware of and complies with its obligations under health and safety-related Law as well as any Company issued or provided health and safety rules, policies and procedures.

11.3 Without limitation or prejudice to Clause 11.1, the Contractor warrants that it will not do or omit to do anything, or use materials, plant, goods, components, substances or processes which:

a) would discharge a contaminant into the environment or cause any adverse effect on the environment; or

b) is a breach of any duty or obligation of the Contractor under any other applicable environmental Law,

11.4 Contractor acknowledges that any failure to adhere to the requirements of this Clause 11 will constitute a defect in the Service and a breach of the Contractor's obligations under the Contract, which may entitle Company to remedies under the Contract that include termination and re-performance or replacement at Contractor's expense. Without prejudice to any other rights that Company may have, including the terms of Clause 15 - Indemnity and consequential damages, Company may impose any applicable penalties for each occurrence of non-compliance as specified in in C5 in the Tender Documents

and the Contractor further warrants that it will comply with all applicable environmental Law as well as any Company issued or provided environmental rules, policies and procedures and, to the extent that the Goods contain toxic, corrosive or hazardous materials, the Contractor will ensure that a notice to that effect accompanies each consignment, together with appropriate care and handling instructions.

Emergency work

11.5 If, during the supply of Goods or performance of Related Services, any work is necessary as a matter of urgency to prevent damage to the Goods or any other property or to prevent the death or injury of any person, the Contractor will immediately carry out such work.

11.6 If the Contractor is unable or unwilling to do such work immediately, the Company may do or cause to be done such work as the Company may determine is necessary in order to prevent damage to the Goods or property or to prevent the death or injury of any person. The cost incurred by the Company in relation to or in connection with any such work will be paid by the Contractor to the Company on demand as a debt due and payable.

12 INSPECTION AND TESTING

Inspection

12.1 The Company will have the right to inspect the Goods at any time, including during manufacture at the Contractor's premises subject to the Company giving reasonable prior notice.

Testing

12.2 The Contractor shall carry out any tests required by the Contract or the Company and must invite, by way of a reasonable advance notice, the Company Representative to attend all such testing.

12.3 Accordingly, the Contractor will:

a) within fifteen (15) Business Days from the Effective Date, prepare and provide to the Company a detailed programme and procedure for the testing and commissioning of the Goods for the Company's approval.

b) if the Company requires changes to the programme and procedure, consult with the Company and will thereafter amend and resubmit the programme and procedure for the Company's approval. The process in this Clause 12.3 (b) will be repeated (as many times as is necessary) until the Company has approved a programme and procedure for testing and commissioning the Goods and Related Services and/or the Work Product, as the case may be.

12.4 The programme and procedure for testing and commissioning approved by the Company under Clause 12.3 (a) or Clause 12.3 (b) (as the case may be) will, for the purposes of this Clause 12, be the ***Testing and Commissioning Programme and Procedure***.

12.5 The Contractor must observe and comply with the Testing and Commissioning Programme and Procedure, including complying with all agreed testing and commissioning periods therein.

General

12.6 The Company may require the Contractor carry out any test and/ or inspection that is not specified in or required by the Contract. The Company will compensate the Contractor for any reasonable and documented costs incurred by the Contractor and the Contractor will be entitled to a fair extension to the Delivery Date for doing so, unless such test and/ or inspection reveals that the Goods (or any part thereof) are not in accordance with the Contract or where such test and/or inspection was otherwise reasonable in light of other Defects.

12.7 The Contractor will provide the Company with a certified report of the results of any tests and/or inspections referred to in Clause 12.6.

Contractor not relieved

12.8 Neither inspection by the Company of any of the Goods nor any testing prior to the issuance of the Acceptance Certificate will relieve the Contractor of any obligations or liabilities under the Contract.

13 ACCEPTANCE CERTIFICATE AND DELAY LIQUIDATED DAMAGES

Acceptance Certificate

13.1 If practical, the Company Representative will inspect the Goods within fifteen (15) days of delivery at the Delivery Point and if:

a) the Goods has successfully completed testing in accordance with the Testing and Commissioning Programme and Procedure;

b) all required Documents, including any drawings, operation and maintenance manuals that may be required under Clause 9, have been delivered to the Company;

c) the Related Services have been performed in accordance with the Contract and otherwise to the satisfaction of the Company; and

d) the Company Representative believes that Goods conforms with Specifications,

the Company Representative will issue a certificate of acceptance (the "**Acceptance Certificate**").

13.2 The Acceptance Certificate will state the date on which the Goods was accepted and will be signed by both the Contractor's Representative and the Company Representative.

Delay liquidated damages

13.3 If the Contractor fails to supply the Goods on or by the Delivery Date or fails to complete the Related Services by the time for completion specified in the Purchase Order, the Contractor shall pay to the Company the Liquidated Damages. Payment of Liquidated Damages under this Clause 13.3 will be without prejudice to the Company's other rights and remedies and will not relieve the Contractor from discharging its obligations under the Contract.

14 DEFECTS

14.1 In the event that the Company notifies the Contractor of any Defect in the Goods at any time prior to expiry of the Warranty Period, the Contractor will, at its own cost and risk and without limiting any other remedy the Company may have at Law or under this Contract, remove, replace, remedy and correct, as applicable, promptly and at no cost to Company, the specific Goods that have Defects or are not in compliance with applicable specifications under this Contract or any Purchase Orders, provided that, where applicable, the Company grants the Contractor reasonable and unhindered access to the Goods during the Warranty Period for it to discharge its obligations.

14.2 If the Contractor fails to promptly remedy any Defect in accordance with Clause 14.1, the Company may, by notice to the Contractor:

a) carry out the remedial work itself or by others and the Company's reasonable costs in doing so will be recoverable by the Company from the Contractor as a debt due and payable; or

b) require the Contractor to grant the Company a reasonable reduction in the Contract Price, with reference to the Defect and the effect on the Goods, as determined by the Company (acting reasonably), and such reduction will be recoverable by the Company from the Contractor as a debt due and payable.

14.3 If any part of the Goods is replaced, repaired or made good during the Warranty Period, the replacement, repaired or made good part will have an extended Warranty Period for a further period as specified in Schedule 3 of this Contract, commencing from the completion of the repair or the supply of a replacement part.

15 INDEMNITY AND CONSEQUENTIAL DAMAGE

15.1 Each Party shall indemnify, defend, and hold harmless the other Party, both during the term and after termination of this Contract, against:

a) any loss, damage or liability suffered by one party arising out of any third party claim in relation to or in connection with any negligence or breach of the Contract by the other party;

b) any loss, damage or liability incurred by one party in respect of injuries to persons or damage to property arising out of the performance of the Contract by the other party; and

c) any costs the Company may incur in respect of that loss, damage or liability.

15.2 Subject to and without affecting the provisions of this Contract regarding the payment rights and obligations of the Parties or the risk of loss, release and indemnity rights and obligations of the Parties, the each Party shall be responsible for and shall hold harmless and indemnify the other Party from and against its own special, indirect or consequential damages, and the Parties agree that special, indirect or consequential damages shall be deemed to include, without limitation, the following: loss of profit or revenue; costs and expenses resulting from business interruptions; loss of or delay in production; loss of or damage to the leasehold; loss of or delay in drilling or operating rights; cost of or loss of use of property, equipment, materials and services, including without limitation those provided by contractors or subcontractors of every tier or by third parties.

16 INSURANCE

Contractor insurance

16.1 The Contractor must ensure that it has in place the following insurances:

a) public liability insurance from the Effective Date until the later of the issuance of the Acceptance Certificate or the completion of the supply of Goods and performance Related Services (if any);

b) transit insurance to cover any loss or damage to the Goods until title in the Goods passes to the Company in accordance with the Contract;

c) and all other insurances required by the Company in relation to supply of the Goods and performance of the Related Services or that are needed to comply with all applicable Laws for the duration of the Contract.

16.2 The Contractor will provide certificates to the Company from the relevant insurers or insurance brokers promptly following a request by the Company Representative from time to time.

Continuance of underlying responsibilities

16.3 Nothing in Clauses 16.1 and 16.2 limits the obligations or liabilities of the Parties under the other terms and/ or conditions of the Contract or otherwise. Any amounts not insured (including by reason of limitation, exclusion or deductible) will be borne by the Company and Contractor in accordance with their responsibilities and liabilities under the Contract.

Failure to comply with this Clause

16.4 Notwithstanding any provision herein to the contrary, failure to secure the insurance coverage, or the failure to comply fully with any of the insurance provisions of this Contract, or the failure to secure such endorsements on the policies as may be necessary to carry out the terms and provisions of this Contract (a) shall in no way act to relieve the Contractor from the obligations of this Contract, and (b), notwithstanding anything to the contrary herein, shall constitute grounds for the immediate termination of this Contract by Company (in addition to any other rights or remedies available to the Company by law or under this Contract). In the event that

liability for any loss or damage be denied by the underwriter(s), in all or in part because of breach of said insurance by the Contractor, the Contractor shall release, protect, hold harmless, defend and indemnify the Company against all claims, demands, costs and expenses, including attorney's fees which would otherwise be covered by said insurance.

17 VARIATIONS

Variation instructions

17.1 The Company Representative may, from time to time, instruct that the Goods or the scope of the Related Services be modified or changed (being a ***Variation***). The instruction must be in writing and served on the Contractor.

Notice of Variations

17.2 If the Contractor receives any instruction from the Company or the Company Representative that is, or which the Contractor believes is a Variation, the Contractor must, within five (5) Business Days of receipt of such instruction, give written notice to the Company Representative to that effect including the Contractor's proposed reasonable adjustment (if any) to the Contract Price (with supporting details) in respect of the same. Notwithstanding anything to the contrary, the instruction will not entitle the Contractor to any adjustment to the Contract Price unless such notice is given by the Contractor within this timeframe.

Price adjustment for Variations

17.3 Prices for items and/or labour costs relating to the supply of the Goods and or the performance of the Related Services included in the Contract will be used to value Variations, to the extent applicable or appropriate. Otherwise the adjustment will be reasonable. If no agreement is reached regarding the adjustment to the Contract Price for a Variation within ten (10) Business Days of the date of the Contractor's notice under Clause 17.2 or within the timeframe otherwise set by the Company, the Company Representative may vary the Contract Price by what it considers to be the appropriate amount under this Clause 17.3.

Compliance with Variation instructions

17.4 The Contractor must comply with a Variation instructed under Clause 17.1 unless it is impossible (including taking account of resources available to the Contractor), unsafe or illegal for the Contractor to do so.

No Variation processing costs

17.5 The Contractor will not be entitled to any compensation for the cost of processing any Variation (whether or not the Variation proceeds).

18 EXTENSIONS OF TIME

Extensions of time

18.1 The Delivery Date will be fairly extended by the Company Representative where the Contractor is fairly entitled to an extension of time by reason of:

a) the net effect of any Variation; or

b) a Force Majeure event or circumstance that prevents the Contractor from performing its obligations under the Contract,

provided that the instruction, event or circumstance must cause actual delay to the critical path elements of the supply of the Goods or performance of the Related Services which the Contractor must demonstrate to the reasonable satisfaction of the Company Representative. This Clause is without limitation or prejudice to the last sentence of Clause 18.2.

Notice of extension of time ground

18.2 The Contractor must, within five (5) Business Days of the occurrence of an extension of time ground under Clause 18.1, give written notice to the Company Representative to that effect including the Contractor's proposed reasonable adjustment (if any) to the Delivery Date (with supporting details) in respect of the same. Notwithstanding anything to the contrary, the extension of time ground instruction, event or circumstance will not entitle the Contractor to any adjustment to the Delivery Date unless such notice is given by the Contractor within this timeframe, provided however that the Company may, at its sole and absolute discretion, at any time and from time to time and for any reason it considers sufficient but without being under an obligation to do so, by notice to the Contractor, unilaterally extend the Delivery Date.

Contractor expedition

18.3 Where there has been a delay that does not entitle the Contractor to an extension of time pursuant to Clause 18.1, or if in the Company's opinion it is likely that the Contractor will not deliver the Goods on or by the Delivery Date or perform the Related Services by the time for completion specified in the Purchase Order, the Contractor will, at its own cost, take all steps as the Company may reasonably require to expedite progress, including by applying additional resources, airfreighting items, working longer hours and/ or otherwise accelerating the works, so as to ensure compliance with the Contract.

19 FORCE MAJEURE

19.1 The Contractor's relief in respect of Force Majeure is set out in Clause 18.1 and Clause 24.4.

19.2 The Company will not be regarded as being in breach of the Contract to the extent that it has been prevented from performing due to Force Majeure.

20 RESPONSIBILITY FOR LOSS OR DAMAGE RELATING TO DRILLING OPERATIONS

Contractor's Surface Equipment

20.1 The Contractor shall assume liability at all times (regardless of whether the Related Service is being performed on a footage basis, daywork basis, turnkey basis or otherwise), for damage to or destruction of the Contractor's surface equipment, regardless of when or how such damage or destruction occurs, except for such loss or

damage as provided in Clause 20.4, and the Contractor shall release the Company of any liability for such loss.

Contractor's In-Hole Equipment

20.2 The Contractor shall assume liability at all times for damage to or destruction of the Contractor's in-hole equipment which occurs during its supply of Goods and performance of the Related Services on a footage or turnkey basis, including, but not limited to, drill pipe, drill collars, and tool joints, and the Contractor shall release the Company of any liability for any such loss or any costs or expenses arising therefrom, except as provided for in Clause 20.4.

Contractor's In-Hole Equipment - Daywork Basis

20.3 In the event the hole should be lost or damaged while the Contractor is performing Related Services or supplying the Goods on a daywork basis, and provided that such loss or damage is attributable to the Company's fault, the Company shall assume liability for damage to or destruction of the Contractor's in-hole equipment, including, but not limited to, drill pipe, drill collars, and tool joints, and the Company shall in such event reimburse the Contractor for the actual value of any such loss or damage which shall be determined by agreement between the Contractor and the Company as current repair or replacement cost of such equipment delivered to the wellsite.

Environmental Loss or Damage

20.4 The Contractor shall release the Company from liability for damage to or destruction of the Contractor's equipment caused by exposure to highly corrosive or otherwise destructive elements, including those introduced into the drilling fluid during the course of supply of Goods and performance of the Related Services.

21 BLOWOUT PREVENTION

21.1 The Contractor shall take all reasonable and prudent precautions in order to keep the relevant well(s) under control to prevent and control fires and Blowouts during drilling operations as part of the supply of Goods and Related Services, including but not limited to the use of blowout preventers or other similar equipment with appropriate pressure fittings attached to properly cemented casing strings and the maintenance of mud-laden fluid of sufficient weight to provide proper well control. A blowout preventer or other equipment necessary to maintain control of the well shall be installed by the Contractor prior to drilling out of the surface casing. Blowout preventers and associated equipment shall always be maintained in good working order by the Contractor. Blowout preventers shall be pressure tested by the Contractor at regular intervals, not to exceed twenty-one days, to ensure proper operation. The Contractor shall conduct a function test shall on a routine basis during drilling operations to ensure that annular preventers and rams will operate properly. Alternate testing procedures may be approved by the Company Representative. The rig personnel shall be trained by the Contractor and at its own cost in the use of blowout prevention equipment and well control procedures on the rig.

22 POLLUTION AND CONTAMINATION

22.1 Notwithstanding anything to the contrary contained herein, it is understood and agreed by and between the Contractor and the Company that the responsibility for pollution or contamination shall be as follows:

a) The Contractor shall assume all responsibility for, including control and removal of, and shall protect, defend and indemnify the Company from and against all claims, demands and causes of action of every kind and character arising from pollution or contamination, which originates above the surface of the land or water from spills of fuels, lubricants, motor oils, pipe dope, paints, solvents, ballast, bilge and garbage.

b) The Contractor shall further assume all responsibility for, including control and removal of, and shall protect, defend and indemnify the Company from and against all claims, demands, and causes of action of every kind and character arising directly or indirectly from all other pollution or contamination which may occur during the conduct of operations constituting supply of Goods and/or performance of the Related Services hereunder, including, but not limited to, that which may result from fire, blowout, cratering, seepage or any other uncontrolled flow of oil, gas, water or other substance, as well as the use or disposition of all drilling fluids, including, but not limited to, oil emulsion, oil base or chemically treated drilling fluids, contaminated cuttings or cavings.

22.2 In the event a third party commits an act or omission which results in pollution or contamination for which either the Contractor or the Company, for whom such party is performing work, is held to be legally liable, the responsibility therefor shall be considered, as between the Contractor and the Company, to be the same as if the party for whom the work was performed had performed the same and all of the obligations respecting protection, defense, indemnity and limitation of responsibility and liability, as set forth in (a) and (b) above, shall be specifically applied.

23 SUSPENSION

23.1 The Contractor will, on written direction from the Company, suspend the supply of the Goods and/or performance of the Related Services in accordance with that direction. The Company will compensate the Contractor for any reasonable costs incurred by the Contractor in giving effect to the direction unless the suspension is:

a) in the opinion of the Company necessary to protect the health and safety of any person; or

b) in response to any breach of the Contract by the Contractor.

23.2 The Contractor will promptly recommence the supply of the Goods and/or the performance of Related Services after any written direction from the Company to do so and the Contractor will be entitled to a fair extension to the Delivery Date and/or the time for the completion of the delivery of Goods and Related Services to reflect the period of the suspension unless the suspension is due to a reason in Clause 23.1(a) or 23.1(b).

24 TERMINATION

Termination rights

24.1 The Company may terminate the Contract, by giving written notice to Contractor, in the event that the Contractor:

a) has not remedied any breach of the Contract within ten (10) Business Days after the date on which the Contractor receives notice from the Company requiring it to remedy the breach (any such notice must make it clear that it is a notice for the purposes of this Clause 24.1 (a) in order to be effective as a notice under this Clause 24.1 (a));

b) becomes bankrupt or insolvent in that the Contractor is not able to pay its debts as they fall due or is placed in liquidation, statutory management, receivership, voluntary administration, is dissolved, or enters into any arrangement for the benefit of its creditors (other than for the purposes of a solvent reconstruction).

c) or the Contractor's subcontractors, agents or employees breaches Schedule 2.

Termination for Prolonged Force Majeure

24.2 The Company may terminate the Contract in the event a Force Majeure continues for ten (10) consecutive days subject to giving written notice to the Contractor.

Rights on termination

24.3 Where the Company terminates the Contract under Clause 24.1:

a) the Company may cancel the supply of the Goods which have not then been shipped and the Related Services which have not then been performed and will not be obliged to make any payment for such Goods or Related Services or in respect of such cancellation; and

b) the Company will be entitled to recover from the Contractor any moneys paid in advance in respect of such Goods and Related Services (if applicable) and its costs, losses and damages incurred as a result of the termination (including, where applicable, any additional costs incurred by the Company in obtaining an alternative supply of the Goods and Related Services (if required) and in remedying Defects).

24.4 Where the Company terminates the Contract under Clause 24.2 the Contractor will cease the delivery of the Goods and performance of the Related Services (as the case may be) and will be entitled to be paid by the Company the value (with reference to the Contract Price) of the obligations performed by the Contractor up until the date of termination (if any).

Company termination for convenience

24.5 The Company may, at its sole and absolute discretion prior to the shipment of the Goods, terminate the Contract for any reason whatsoever or without cause by giving written notice to the Contractor to that effect. Upon receipt of any such notice of

termination the Contractor will cease the delivery of the Goods and/or performance of the Related Services (as the case may be) except to the extent specified in the notice of termination, and will be entitled to be paid by the Company the value (with reference to the Contract Price) of the obligations performed by the Contractor up until the date of termination (if any).

Return of property

24.6 On the termination of the Contract for any reason, the Contractor must ensure that all property belonging to the Company is delivered or returned (as the case may be) in a satisfactory condition to the Company before receiving any final payment under the Contract.

Without prejudice

24.7 Termination of the Contract for any reason will be without prejudice to any rights, liabilities or obligations of either Party which have accrued up to the date of termination.

25 DISPUTE RESOLUTION

25.1 The Parties shall attempt to resolve any Dispute amicably.

25.2 If a Dispute is not resolved within [ninety (90)] days of written notification of its existence from one Party to the other, such Dispute shall be finally resolved by referral to arbitration administered by Oman Commercial Arbitration Centre (OAC) in accordance with the Arbitration Rules of Oman Commercial Arbitration Centre (OAC Rules), which Rules are deemed to be incorporated by reference into this clause.

The number of arbitrators shall be one if the disputed amount is equal to or less than OMR 1,000,000. Otherwise, the number of arbitrators shall be three. The seat, or legal place, of arbitration shall be Muscat Sultanate of Oman. The language to be used in the arbitral proceedings shall be English.

No suspension during a Dispute

25.3 During the resolution of any Dispute the Contractor will continue the performance of its obligations in accordance with the Contract.

26 GOVERNING LAW

The Contract is governed by and will be construed in accordance with the laws of Oman.

27 ASSIGNMENT AND NOVATION

Contractor assignment

27.1 The Contractor may not assign, charge or novate all or any part of its rights and/or obligations under the Contract to any person or entity without the prior written consent of the Company (which may be given or withheld at the Company's sole and absolute discretion).

Contractor deemed assignment

27.2 For the purposes of Clause 27.1, where the Contractor is a company that is not listed on the main board of a public stock exchange, any change in the legal or beneficial ownership of its shares or those of its holding company, or the issue of new capital, which results in a change in the effective management or control of the Contractor will be deemed to be an assignment for the purposes of Clause 27.1. Any sale, disposal or transfer of more than 50% of the Contractor's assets or undertakings will also be deemed to be an assignment for the purposes of Clause 27.1.

Company assignment or novation

27.3 The Company may, without the consent of the Contractor, assign, charge or novate all or any part of its rights and/or obligations under the Contract to any person or entity.

Formalities

27.4 The Parties agree to promptly execute all documentation reasonably required by the assigning, charging or novating Party in order to effect and/or formalise any permitted assignment, charge or novation. In respect of any novation by the Company under Clause 27.3, the Contractor must promptly, following request by the Company, duly execute, in triplicate, a deed of novation in the form required by the Company, failing which the Company may withhold payment of any amounts otherwise due and payable by the Company to the Contractor under the Contract.

28 CONFIDENTIALITY

28.1 Confidentiality

The Contractor will at all times keep confidential the Confidential Information, except to the extent:

a) the information was in the public domain prior to obtaining the same from or on behalf of the Company or later becomes part of the public domain through no act or omission of the Contractor or any person or entity for whom it is responsible;

b) the information is disclosed to the Contractor by a third party who did not receive the same, directly or indirectly, from the Company and who has, to the best of the Contractor's knowledge, no obligation of confidentiality with respect thereto;

c) the information is to be provided to the Contractor's employees, agents or Subcontractors to perform its obligations under the Contract, provided that the Contractor informs the person or entity of the confidential nature of the information and the person or entity unconditionally and irrevocably agrees in writing to keep the information confidential (such written agreement must be obtained prior disclosure being made);

d) the Contractor has a statutory obligation to disclose such information or is required to make such disclosures by a court of law; or

e) expressly authorised by the Company in writing.

Media statements

28.2 The Contractor must not make any statements to the media or others regarding the contents of the Contract or the Goods without the prior written approval of the Company.

29 CLAIMS

The Contractor acknowledges and agrees that it is not entitled to and will not claim any extension of time, any Variation, any additional payment or any other relief whatsoever under, in relation to or in connection with the Contract except to the extent expressly set out in the Contract, and it will not claim otherwise.

30 NOTICES

30.1 Any notice, consent, approval or document required to be given under the Contract must be in writing, in the English language and must be given by hand, post, facsimile or email to the Party's address for service of notices set out in Clauses 30.3 and 30.4. Subject to Clause 30.2, a notice, consent, approval or document is taken to have been received:

a) if the notice, consent, approval or document is delivered by hand to the receiver, at the time of delivery;

b) if the notice, consent, approval or document is posted in a postage paid registered envelope addressed to the receiver, at the time when it would be received in the ordinary course of registered post then prevailing;

c) if the notice, consent, approval or document is transmitted by facsimile, on the date of transmission subject to receipt of an error free transmission report by the transmitter; and

d) if the notice, consent, approval or document is sent by email, when receipt of the email is acknowledged by the receiver by return email or otherwise in writing, except that return emails generated automatically will not constitute an acknowledgment.

30.2 If a notice, consent, approval or document is received on a day or on a day that is not a Business Day, the notice will be taken to have been received on the next Business Day.

30.3 Address for notices to Company:

a) Postal address: P.O. Box 1156, P.C. 130, Azaiba, Sultanate of Oman

b) Email: Contract@abrajenergy.com

c) For the attention of: Contract Department

30.4 Address for notices to Contractor:

a) Postal address: [insert]

b) Email: [insert]

c) For the attention of: [insert]

31 **GENERAL**

Anti-Bribery and Anti-Corruption

31.1 The Contractor, its employees, agents and Subcontractors shall:

a) comply with all applicable Laws relating to anti-bribery and anti-corruption (***ABC Requirements***) and Schedule 2;

b) implement and maintain throughout the term of this Contract its own policies and procedures, including adequate procedures to ensure compliance with the ABC Requirements, and shall enforce them where appropriate;

c) promptly report to the Company any request or demand for any undue financial or other advantage of any kind received by the Contractor in connection with this Contract or which has been received prior to execution of this Contract which relates to the subject matter of this Contract.

31.2 The Contractor, its employees, agents and Subcontractors shall ensure that any person associated with it (as the case may be) who is performing services in connection with this Contract does so only on the basis of a written contract which imposes on and secures from such person terms equivalent to those imposed on the Contractor, its employees, agents and Subcontractors in Clause 31.1. The Contractor, its employees, agents and Subcontractors shall each be responsible for compliance with Clauses 31.1 and 31.2 and shall be directly liable to the Company for any breach thereof.

31.3 Anti-Corruption and Trade Restriction Undertaking:

1.1 Contractor agrees and undertakes that in connection with this Contract and the transactions contemplated by this Contract, it will comply with all applicable laws, rules, regulations, decrees and/or official governmental orders of the United Kingdom, the United States of America and the Sultanate of Oman relating to anti-corruption and anti-- money laundering.

1.2 As a matter of corporate policy, Company expressly prohibits payment of bribes and also payment of any so-called "facilitation" or "grease" payments in connection with Company business operations by any contractor or agent engaged to provide goods or services to Company . Contractor agrees, undertakes and confirms that it, and each member of Contractor Group, has not made, offered, promised to make or authorized the making of, and will not make, offer, or promise to make, or authorize the making of, any payment or other transfer of any financial or other advantage or anything else of value, including without limitation the provision of any funds, services, gifts or entertainment, directly or indirectly to any:

(a) Government official as defined herewith in Sub-article 1.8;

(b) Director, officer, employee or agent/representative of an actual or prospective counterparty, supplier or customer of Company;
(c) Director, officer, employee or agent of Company or its co-ventures or any of its or their Affiliates;
(d) Political party, official of a political party, or candidate for public office;
(e) Agent or intermediary for payment to any of the foregoing; or
(f) Other person or entity;

for the purpose of obtaining, rewarding or influencing the award of this Contract or for any improper advantage or improper purpose or where it would be improper for the person to accept such an advantage in connection with the performance of this Contractor and the transactions contemplated hereunder or in connection with any other business transactions involving Company, if and to the extent that to do so is or would be in violation of or inconsistent with the principles or requirements of any anti-bribery or anti-money laundering laws applicable to Company or to Contractor, or to their respective parent companies, including, without limitation, the Omani law of Protection of Public Money and Avoid of Public Interest, the UK Bribery Act 2010, the UK Anti-Terrorism, Crime and Security Act 2001, the U.S. Foreign Corrupt Practices Act and successor legislation, legislation implementing the OECD Convention on Combating Bribery of Foreign Public Officials in International Business Transactions or the United Nations Convention Against Corruption, and/or the anti-corruption or anti-money laundering laws of the Sultanate of Oman. Notwithstanding the foregoing undertakings, Contractor agrees to notify Company promptly upon discovery of any instance where Contractor has failed to comply with any provisions of this Annexure.

1.3 Contractor agrees and undertakes that in connection with this Contractor and in connection with any other business transactions involving Company in the Sultanate of Oman, any member of Contractor Group will:

(a) apply effective disclosure controls and procedures;

(b) maintain throughout the Contract term and for at least three (3) years following its expiration or termination, books, records, and accounts which, in reasonable detail, accurately and fairly reflect the transactions undertaken and the disposition of assets; and
(c) Will maintain an internal accounting controls system that is sufficient to ensure the proper authorization, recording and reporting of all transactions and to provide reasonable assurance that violations of the anticorruption laws of the applicable jurisdictions will be prevented, detected and deterred.

1.4 Contractor agrees and acknowledges that Company, itself or through its duly appointed representatives, shall have the right to inspect and audit any and all books and records of Contractor relating to Contractor compliance with its obligations under this Annexure, and to make copies, at its expense, of any such books and records.

1.5 Contractor agrees to cooperate with Company, as Company may request, in making its books, records, and personnel available in connection with any investigation conducted by Company or government authorities of matters that may

implicate transactions or activities carried out by Contractor in connection with this Contract. Contractor will also provide Company with such further assurances or certificates that Company may request from time to time during the term of this Contract relating to matters covered by this Annexure, and Contractor shall certify to Company in writing its compliance with this Annexure on an annual basis.

1.6 In addition to suspension and termination provisions, and without prejudice to any other rights or remedies Company may have hereunder or at law (including, as applicable, the right to damages for breach of contract), Company shall have the right to suspend payment under and/or terminate this Contract with immediate effect:

(a) if Company reasonably believes in good faith that any of the foregoing agreements, undertakings, or requirements set forth in this Annexure have not been complied with or fulfilled by Contractor in any material respect; or
(b) Where any member of Contractor Group becomes designated as a Restricted Party. A "Restricted Party" is any person who is identified from time to time by any government or legal authority under applicable trade sanctions, export controls, anti-money laundering, non-proliferation, anti-terrorism and similar laws as a person with whom trade or financial dealings and transactions by Company or its co-ventures or any of its or their Affiliates are prohibited or restricted.

1.7 All payments by Company to Contractor shall be made in accordance with the terms of payment specified in this Contract. In the absence of any such specific payment instructions elsewhere in this Contract, payments by Company to Contractor shall only be made by check or wire transfer to a bank account of Contractor in the country in which Contractor is incorporated or where it has its head office, or to its office in the Sultanate of Oman, details of which shall be given by Contractor to Company in writing. Such notification shall be deemed to constitute a representation and warranty that the bank account so notified is owned solely by Contractor and that no person other than Contractor has any ownership of or interest in such account.

1.8 For the purposes of this Annexure, the term "government official" shall include (i) any minister, civil servant, director, officer or employee or other official of any government or any department, agency or instrumentality thereof, and/or of any government-owned or controlled company, any company or enterprise in which a government owns an interest, and/or of any public international organization, or (ii) any close family member of any of the foregoing. For avoidance of doubt, the term "government official" shall include all directors, officers and employees of the Ministry of Oil and Gas of the Sultanate of Oman other Omani state-owned companies, agencies, bodies or entities. This term also includes any person acting in any official, legislative, administrative or judicial capacity for or on behalf of any such government or department, agency, instrumentality, company, or public international organization, including without limitation any judges or other court officials, military personnel and customs, police, national security or other law enforcement personnel.

1.9 Contractor represents, warrants, and covenants that except as otherwise disclosed by notice to Company, as of the Contract Effective Date and for the Contract term, that

(i) No government official will have a direct or indirect interest in Contractor or in this Contract, or in the proceeds thereof; and
(ii) It shall notify Company promptly and in writing of any change in the foregoing.

1.10 Contractor further agrees and undertakes that with respect to any Subcontractor it may engage in connection with this Contract or any other business transactions in the Sultanate of Oman involving Company that (i) it will conduct appropriate due diligence prior to appointing or engaging such Sub-Contractor to ensure that they are duly qualified to perform the tasks for which they have been engaged and that they are of good reputation, and (ii) it will cause any such Sub-Contractor to agree, in writing, to compliance with laws and anti-corruption obligations and undertakings substantially equivalent to those set forth in this Annexure; and to audit and inspection provisions substantially equivalent to those set forth in this Annexure; such that both Company and Contractor shall each have the same rights with respect to any Sub-Contractor (including without limitation the same rights of inspection and audit with respect to the books and records of that Sub-Contractor) that Company has with respect to Contractor under this Contract.

1.11 Contractor shall comply with all applicable export control, trade embargo and other foreign trade control laws, rules and regulations, including but not limited to the European Dual-Use Export Control Regulation (EC) 428/2009, the United States Export Administration Regulations, the United States International Traffic in Arms Regulations and similar laws of the Sultanate of Oman (together "Trade Restrictions"), relating to the performance of its obligations hereunder. Failure by Contractor to comply with applicable Trade Restrictions shall constitute a material breach of this Contract.

1.12 Contract shall be solely responsible for applying for and obtaining appropriate governmental authorizations for the export and import of any equipment, software, technology or services to or for the benefit of Company.

1.13 Contractor warrants, undertakes and represents to Company that Contractor Group shall not do or omit to do anything that may cause Company Group, in Company's reasonable judgment, to be in breach of applicable Trade Restrictions, and shall protect, indemnify and hold harmless Company Group from any claim, damages, liability, costs, fees and expenses incurred by Company Group as a result of the failure or omission of Contractor to comply with such Trade Restrictions.

1.14 Contractor warrants, undertakes and represents to Company that no person or entity within Contractor Group is (i) a person targeted by national, regional or multilateral trade or financial sanctions under applicable laws and regulations, including but not limited to persons designated on the United States Department of the Treasury, Office of Foreign Assets Control's ("OFAC") List of Specially Designated Nationals and Other Blocked Persons (including terrorists and WMD proliferators), United States State Department Non-proliferation Sanctions Lists, United States Department of Commerce Denied Parties List, Entity List or Unverified List, United Nations Financial Sanctions Lists, or the European Union or United Kingdom HM Treasury Consolidated Lists of Financial Sanctions Targets, in force from time to time, or (ii) directly or indirectly owned or controlled by or acting on

behalf of such persons (together "Restricted Persons"). Contractor shall notify Company in writing immediately upon the occurrence of any event that might render the foregoing representations and warranties of this Sub-article 1.14 incorrect.

1.15 Contractor expressly agrees and acknowledges that Company's ability perform under this Contract is subject to Company's compliance with applicable laws, rules and regulations. Contractor agrees that any refusal or failure by Company to perform its obligations hereunder on account of compliance with laws will not constitute a breach of any obligation under this Contractor and hereby waives any and all claim against Company for any legal recourse, including, but not limited to, injunctive or declarative relief, loss, cost or expense, including consequential damages, that Contractor may incur or be subject to by virtue of such refusal or cancellation.

1.16 Without limitation on other termination rights in this Contract, Company may terminate the CONTRACT by written notice if:

(a) its continued performance of this Contract would contravene any local, state, national or international regulation or law, in which event the termination shall become effective immediately;

(b) Any person or entity within Contractor GROUP becomes a Restricted Person as defined herein; or

(c) Contractor breaches this Annexure.

In case of termination under this Sub-article 1.16, Company shall have no further obligation to Contractor whatsoever hereunder. Contractor further acknowledges and agrees that in the event of termination under this Sub-article 1.16, it shall forfeit all accrued but unpaid compensation and shall refund paid compensation if, in Company's reasonable judgment, any applicable law, rule, regulation or administrative requirement makes improper or prohibits the payment of said compensation, or if such payments by Company to Contractor may, in Company's reasonable judgment, result in liability to Company under any applicable law, rule, regulation or administrative requirement.

Indirect and consequential loss

31.4 Notwithstanding any other provision in this Contract, neither Party will be liable to the other Party for the other Party's indirect, consequential or special loss, or loss of profit, however arising, whether under contract or otherwise.

Entire agreement

31.5 The Contract constitutes the entire understanding and agreement of the Parties relating to the matters dealt with in it and supersedes and extinguishes all prior agreements, statements, representations and understandings, whether verbal or written, given by or made between the Parties relating to the matters dealt with in the Contract. The Parties will not be bound by or be liable for any statement, representation, promise, inducement or understanding of any kind or nature in respect of the subject matter of

the Contract not recorded in the Contract. Notwithstanding the foregoing, this provision will not limit the liability of a Party in respect of fraudulent acts or omissions of that Party, and without limitation or prejudice to Clause 29, this provision is not intended to and nor will it limit or prejudice any rights and/ or remedies of a Party at law or otherwise in relation to or in connection with the Contract.

No partnership/agency:

31.6 The Contract does not create a partnership or joint venture between the Parties and, in particular but without limitation, the Company will not be under any obligation to the Contractor or to any other Party in respect of any subcontracts entered into in respect of the Contract.

Severability

31.7 If any one or more of the provisions contained in the Contract are invalid, illegal or unenforceable in any respect under any applicable Law, the validity, legality and enforceability of the remaining provisions contained in the Contract will not in any way be affected or impaired.

Further acts

31.8 Each Party will sign and deliver any documents and undertake any acts, matters and things that are reasonably required or requested by the other Party to carry out and give effect to the intent and purpose of the Contract.

Counterparts

31.9 The Contract may be executed in counterparts (including electronic copies of counterparts) and, provided that each Party has duly executed a counterpart, the counterparts together will constitute a binding and enforceable agreement between the Parties.

Waiver

31.10 Any waiver of a Party's rights, powers or remedies under the Contract, or of the other Party's obligations, must, to be effective, be in writing, be dated and be signed by an authorised representative of the waiving Party. No waiver by a Party of the other Party 's obligations contained in the Contract will constitute a waiver of any other obligations expressed or implied herein.

Amendments

31.11 No amendment to the Contract will be binding upon any Party unless the amendment is signed by an authorised representative of each Party.

Approvals

31.12 The obligations and liabilities of the Contractor under the Contract will not be released, diminished or in any other way affected by any enquiry, direction, inspection, comment, consent, sanction, acknowledgement, confirmation, approval or advice made or given by or on behalf of the Company (including by the Company Representative) or failure by any such person to enquire, direct, inspect, comment, consent, sanction, acknowledge, confirm, approve or advise.

Plans

31.13 The observance by the Contractor of any programme, procedure, policy, manual, plan or similar instrument or tool referred to or derived or prepared under the Contract will not relieve the Contractor from any of its obligations or liabilities under the Contract.

Joint and several liability

31.14 To the extent that the Contractor is comprised of more than one person or entity in joint venture, partnership, consortium or other unincorporated grouping of two or more persons (***Joint Venture***):

a) those persons or entities will be jointly and severally liable to the Company for all obligations, duties and liabilities of the Contractor under the Contract;

b) the Contractor will notify the Company in writing as to which of those persons or entities (if not each of them) will have authority to bind the Contractor and in the absence of such written notification each such person or entity will be deemed to have the authority to bind the Contractor for all purposes (which cannot be retrospectively changed by the Contractor);

c) the Contractor must ensure that the composition or legal status of the Joint Venture is not altered or changed in any way whatsoever without the prior written consent of the Client; and

d) all references to "Contractor" in the Contract will be deemed to be a reference to each and every person and entity comprising the Contractor, individually, as well as to all the persons and entities comprising the Contractor, together.

Survival

Clauses 1, 8, 10, 15, 20, 23, 25, 26, 28, 29 and 31 will survive termination or expiry for whatever reason of the Contract.

Abraj Energy Services S.A.O.G.

Contract No. STC.260915.WS.8000679

Rate Agreement for Supply of Trailer Mounted Sand Management System & Well Testing Unit Packages

C3, Special Terms & Conditions

TO BE INSERTED PRIOR SIGNING

Abraj Energy Services S.A.O.G.

Contract No. STC.260915.WS.8000679

Rate Agreement for Supply of Trailer Mounted Sand Management System & Well Testing Unit Packages

C4, Scope of Word

Tender Scope of Work

Abraj Energy Services SAOC is issuing a tender under a multi-award framework for the manufacture, supply, and delivery of equipment to support the awarded Integrated Fracturing Services (IFS) contract with Petroleum Development Oman (PDO) and to ensure the availability of reliable equipment for flowback and well-testing operations.

The scope of this tender is divided into the following categories:

Category 1 – Sand Management Mounted Trailer
• Trailer-Mounted Sand Management System (10,000 PSI

Category 2 – Sand Management Mounted Trailer
• Trailer-Mounted Sand Management System (15,000 PSI

Category 3 – 4 Phase Seprator
• Trailer-Mounted 4-Phase Horizontal Test Separator – 2160 PSI

Category 4 – Pumps & Igntion system
• Emergency Shutdown (ESD) System
• TRSSV pump
• Remote Auto-Ignition System

Additional list of Accessories for (Category 1,2)Pipes
• X-overs
• Low Torque Valves
• T-pieces
• Cemment Blocks
• Pipe Racks
• Stands
• Spares

The Company reserves the right to award the contract on a multi-award basis, by category, by individual equipment type within a category, or for the entire scope of work, to the technically compliant bidder(s) offering the best overall value, taking into consideration technical compliance, commercial offer, and delivery lead time.

Common Requirements

This document outlines the minimum technical, quality, and regulatory requirements for the design, manufacture, and supply assets The
supplier is responsible for ensuring all equipment meets the specified standards for safety, reliability, and performance in the intended operating environment.

Regulatory and Industry Standards Compliance
All equipment and components must be designed, manufactured, and tested in accordance with the latest editions of the following international standards:

API Compliance: All pressure-containing equipment must comply with **API 6A** (Specification for Wellhead and Tree Equipment) or **API 16C** (Choke and Kill Systems), as applicable to the specific service.
Material Selection (H2S Rating): Equipment must be compliant with **NACE MR0175/ISO 15156** for sour service. All materials must be suitable for hydrogen sulfide (H2S) environments, supported by hardness testing and heat treatment documentation.
ASME Compliance: Pressure vessels must adhere to **ASME BPVC Section VIII**, and piping systems must comply with **ASME B31.3**.

Design and Engineering Documentation
The supplier shall submit a comprehensive technical package for review and approval, including:
Detailed Design: Full engineering drawings, Piping and Instrumentation Diagrams (P&IDs), and 3D CAD models.
Structural Analysis: Finite Element Analysis (FEA) and stress analysis reports validating integrity under maximum operating pressure and temperature.
Erosion Modeling: Calculations demonstrating the expected service life of wear components (e.g., nozzles, liners) based on specified sand production rates.
Manuals: Comprehensive Installation, Operation, and Maintenance (IOM) manuals.

Quality Control and Assurance (QC/QA)
A complete Quality Control Plan (QCP) must be implemented, including:
Material Traceability: Full traceability for all pressure-retaining parts, including Mill Test Reports (MTRs) and Heat Numbers.
Non-Destructive Testing (NDT): Reports for RT, UT, MPI, and DPI conducted during fabrication.
Pressure Testing: Certified hydrostatic and pneumatic test reports.
Manufacturing Data Book: A final dossier containing all certificates of conformity, test logs, and inspection records.

1.2 Technical Specifications

1.2.1 Category 1 – Sand Management Mounted Trailer 10k

Following is the List of Asset Required for Category 1

SR.	EQUIPMENT	QTY	Comments
1	4 1/16 Flange Surface Safety Valve	4	3 SSV will be only spare not required at trailer
2	4 1/16 Flange Dual Sand Catcher Vessel	1	
3	4 1/16 Double Block Choke Manifold	1	
4	4 1/16 Data Header	3	
5	4 1/16 Pipe Spool with Blocks		20 metrs pipes different sizes 4 blocks (2 way Block)

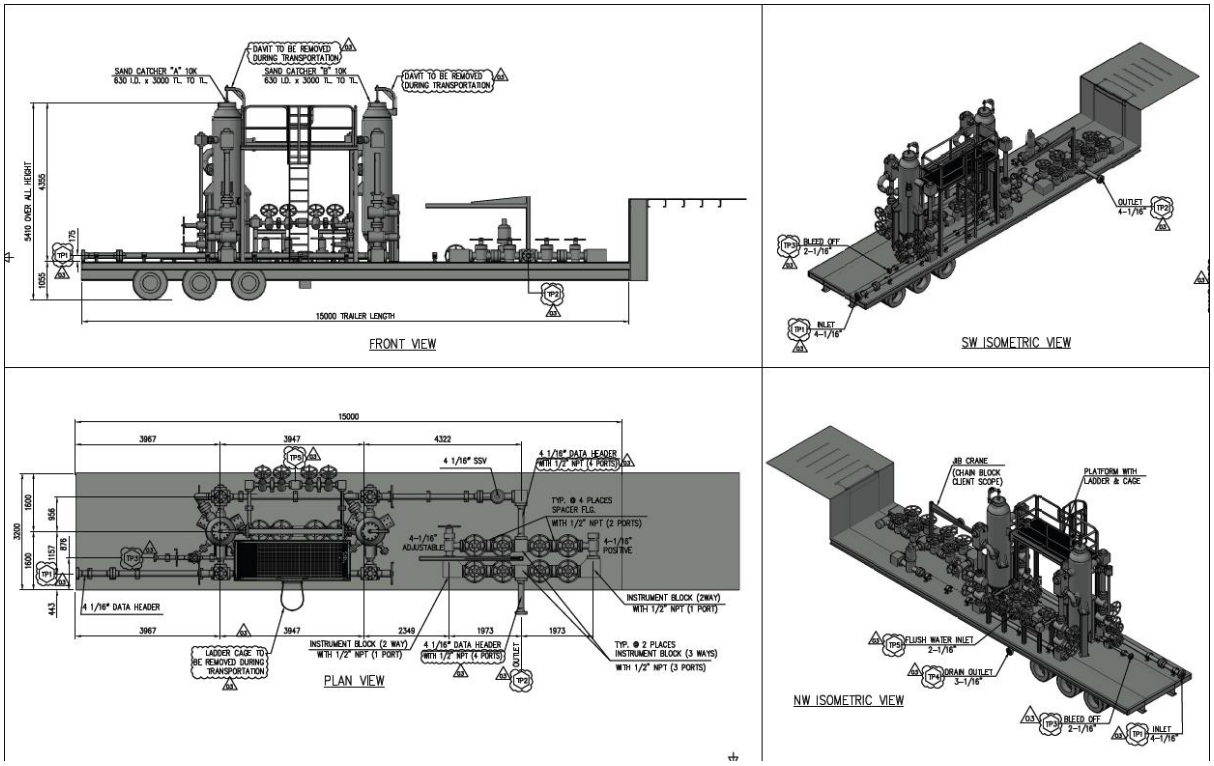
DAVIT TO BE REMOVED DURING TRANSPORTATION
SAND CATCHER "A" 10K 630 I.D. x 3000 TL. TO TL.
SAND CATCHER "B" 10K 630 I.D. x 3000 TL. TO TL.
DAVIT TO BE REMOVED DURING TRANSPORTATION
5410 OVER ALL HEIGHT
4355
1055
775
15000 TRAILER LENGTH
FRONT VIEW
OUTLET 4-1/16"
BLEED OFF 2-1/16"
INLET 4-1/16"
SW ISOMETRIC VIEW
15000
3967
3947
4322
4 1/16" SSV
4 1/16" DATA HEADER WITH 1/2" NPT (4 PORTS)
TYP. @ 4 PLACES SPACER FLG.
WITH 1/2" NPT (2 PORTS)
4-1/16" ADJUSTABLE
4-1/16" POSITIVE
INSTRUMENT BLOCK (2WAY) WITH 1/2" NPT (1 PORT)
4 1/16" DATA HEADER
3967
3947
2349
1973
1973
LADDER CAGE TO BE REMOVED DURING TRANSPORTATION
INSTRUMENT BLOCK (2 WAY) WITH 1/2" NPT (1 PORT)
4 1/16" DATA HEADER WITH 1/2" NPT (4 PORTS)
OUTLET
TYP. @ 2 PLACES INSTRUMENT BLOCK (3 WAYS) WITH 1/2" NPT (3 PORTS)
PLAN VIEW
JIB CRANE (CHAIN BLOCK CLIENT SCOPE)
PLATFORM WITH LADDER & CAGE
FLUSH WATER INLET 2-1/16"
DRAIN OUTLET 3-1/16"
BLEED OFF 2-1/16"
INLET 4-1/16"
NW ISOMETRIC VIEW

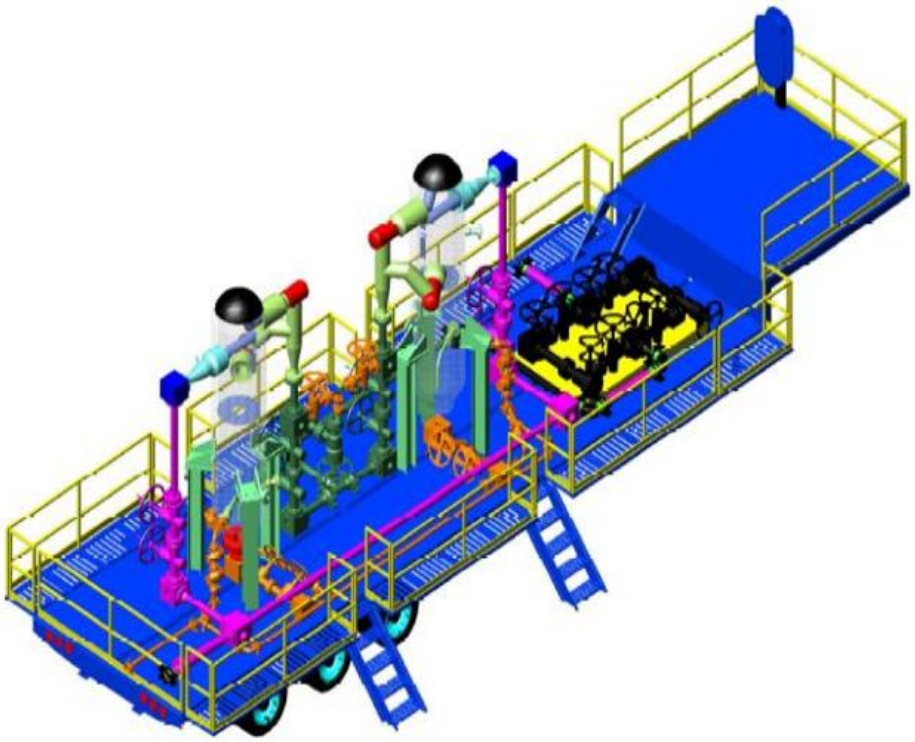

Asset Specification

Surface Safety Valve

- Size: 41/16 Flange In/Out
- Temp Rate: P + U
- Specification: API Spec 6A, Annex F, PR 2, PSL 3- API 6AV1 Class II/III qualification, fire-safe certification (API 6FA), fail-safe closed design
- Only Magnum Type from WOM accepted.
- Supplier to provide 6 completed sets of spare parts for SSV

Sand Management System (Sand Catcher)

- Size: 41/16 Flange In/Out
- Temp Rate: -20 to -250 F
- Specification: API Spec 6A, PR 2, PSL 3. API Spec 6AV1, Class II or III or equivalent sandy service qualification.
- WP10kpsi Dual Pot Sand Filter Unit
- Suppleir to provide 5 complete sets of spare parts for 2 1/16 gate valves
- Suppleir to provide 5 complete sets of spare parts for 3 1/16 gate valves
- Suppleir to provide 7 complete sets of spare parts for 4 1/16 gate valves
- Supplier to provide 1/2’’ NPT 10 K rate fittings (10 k ball valve QTY:30 , 10 K needle valve QTY:30 , Plug fititngs qty:30) only backer type accepted

Connection and Spools Preferred to be coated

- Refer to the below P&ID for Sand Catcher design.

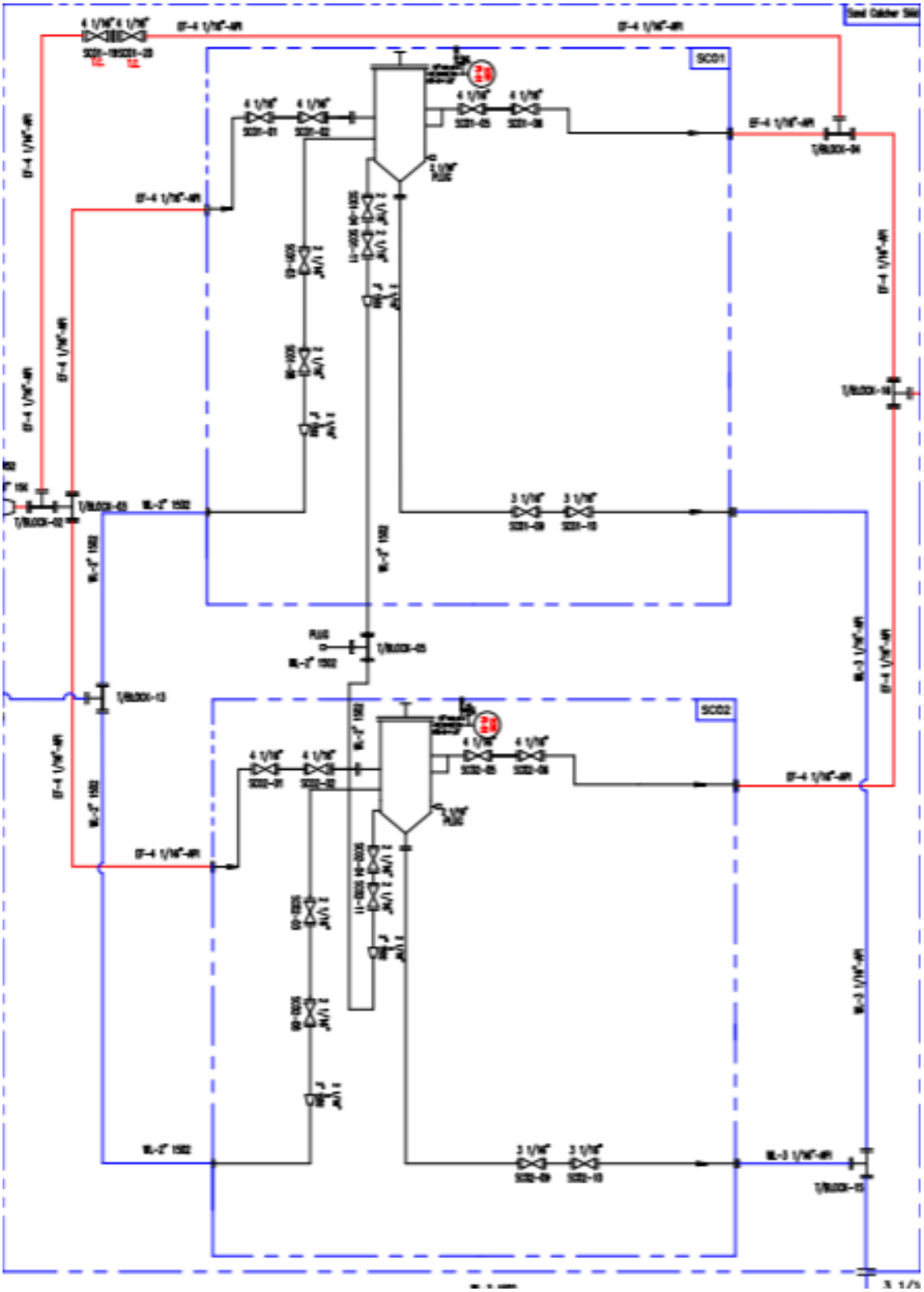

SAND CATCHERS	*Certifying authority: DNV*	*Design Code*
Vessel Size: 630mm ID x 3000mm T/T	*MAWP: 10,000 psi (689.65 Bar g)*	*Material AISI 4130*
Inlet: 4 1/16" FLG	*Working temperature: –20 to 121°C*	*API 6 PSL 3 PR 2*
Outlet: 4 1/16" FLG	*Man way: 7 1/16" 10K GLG*	*Design codes: NACE MR 01-75*
Drain outlet: 3 1/16" FLG	*Capacity: 1.197 m3*	*Safety devices:*
Flush inlet: 2 1/16"FLG	*Gate Valves: 4"1/16, 3"1/16 2"1/16 10K*	*Pressure relief valve (PSV) N/A*

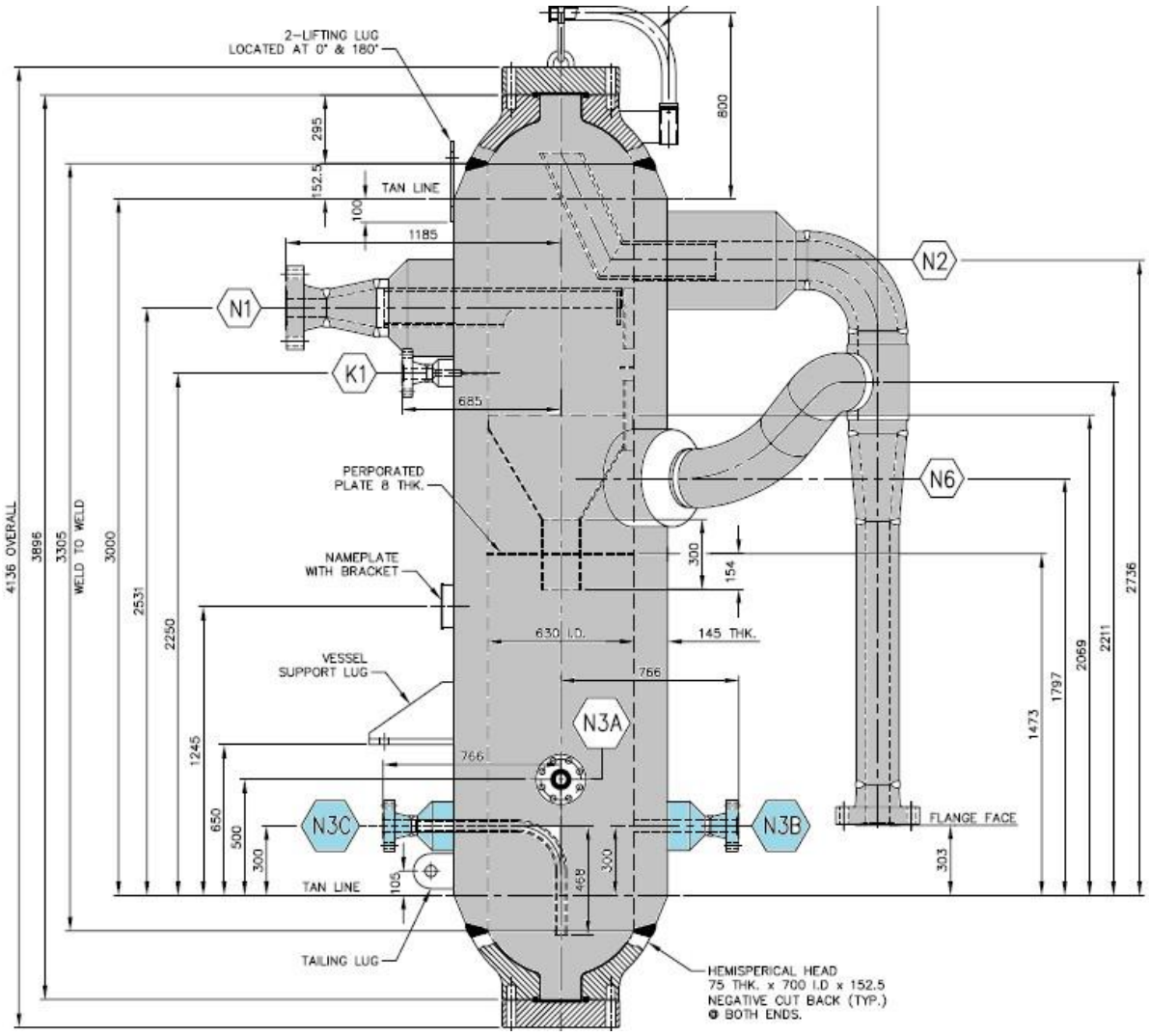

Double Block Choke Manifold:

- Size: 41/16 Flange In/Out
- Temp Rate: P+U, DD or EE
- Specification: API Spec 6A, PR 2, PSL 3 design requirements or greater.
- Only Magnum Type from WOM accepted.
- Fixed chokes in both flow paths.
- Two complete sets of fixed chokes shall be supplied in the following increments:
- Supplier to provide 6 complete sets of spare parts for 4 1/16 gate valves
- Design to have boom to left the cap whilke changing choke manifold

$^{8}/_{64}$-inch to $^{32}/_{64}$-inch in $^{2}/_{64}$-inch increments.
$^{32}/_{64}$-inch to $^{64}/_{64}$-inch in $^{4}/_{64}$-inch increments.
$^{64}/_{64}$-inch to $^{128}/_{64}$-inch in $^{8}/_{64}$-inch increments.

Data Header QTY:3

- Size: 41/16 Flange In/Out
- Temp Rate: -20 to 250 °F
- Specification: Conform to ANSI/ASME B31.3 or the spools (adapter and spacer) requirements of API Spec 6A
- Metal-to-metal seal connections
- Each Data header with a minimum of 10 instrumentation tapings (1/2'' NPT)

4 1/16 Pipe Spool 20 Meters with 2 way Blocks QTY: 4

Size: 41/16 Flange In/Out

- Temp Rate: -20 to 250 °F
- Specification: Conform to ANSI/ASME B31.3 or the spools (adapter and spacer) requirements of API Spec 6A
- Metal-to-metal seal connections

Trailer Specifications

- 3 Axcell min
- sidewalk 0.5 meters each side requirements of API Spec 6A
- Hand reel 1.2m Hight
- Mounted with 6 Explosive proof light
- Minimum 4 Jacks
- 3.5'' king Pin
- Follow ROP and RAS Procedure
- Max Hight 5.4 meters with Highest point of Sand catcher.

1.2.2 Category 2 – Sand Management Mounted Trailer 15k

Following is the List of Asset Required for Category 2

SR.	EQUIPMENT	QTY	Comments
1	4 1/16 Flange Surface Safety Valve	2	One will be spare not required on the trailer
2	4 1/16 Flange Dual Sand Catcher Vessel	1	
3	4 1/16 Double Block Choke Manifold	1	
4	4 1/16 Data Header	3	
5	4 1/16 Pipe Spool with Blocks		20 metrs pipes different sizes 4 blocks (2 way Block)

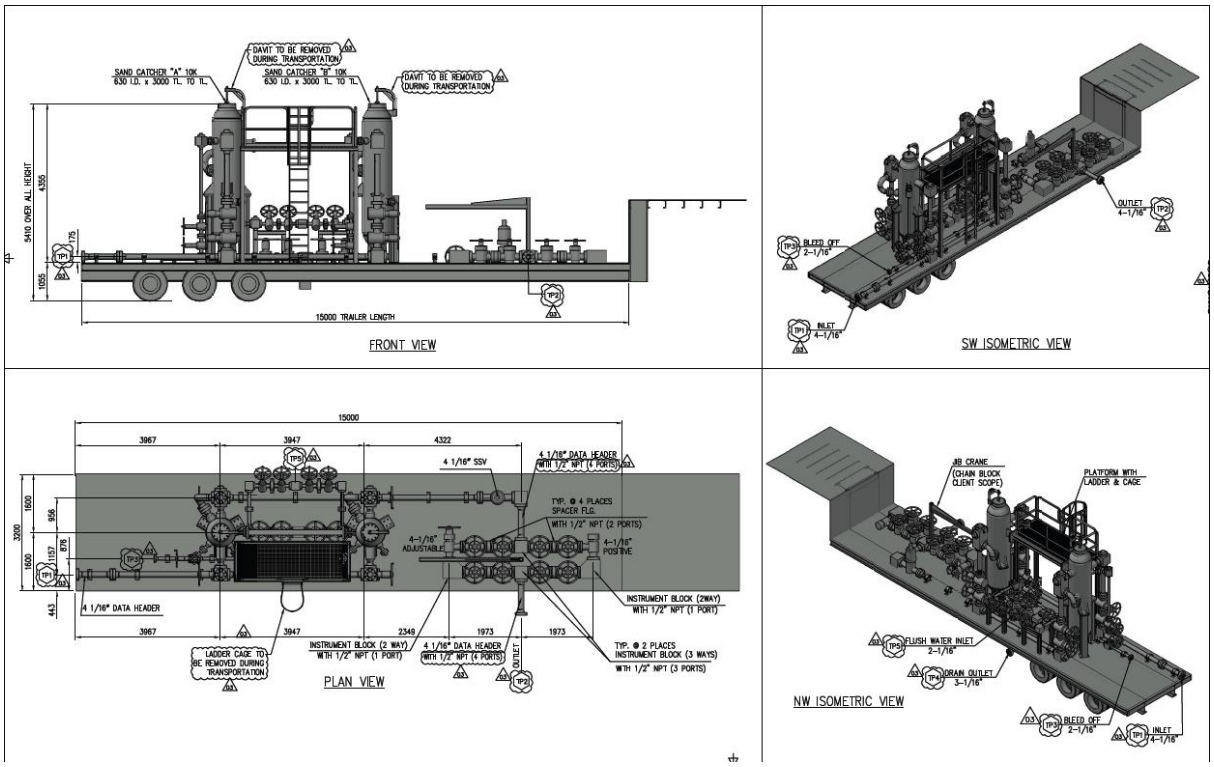

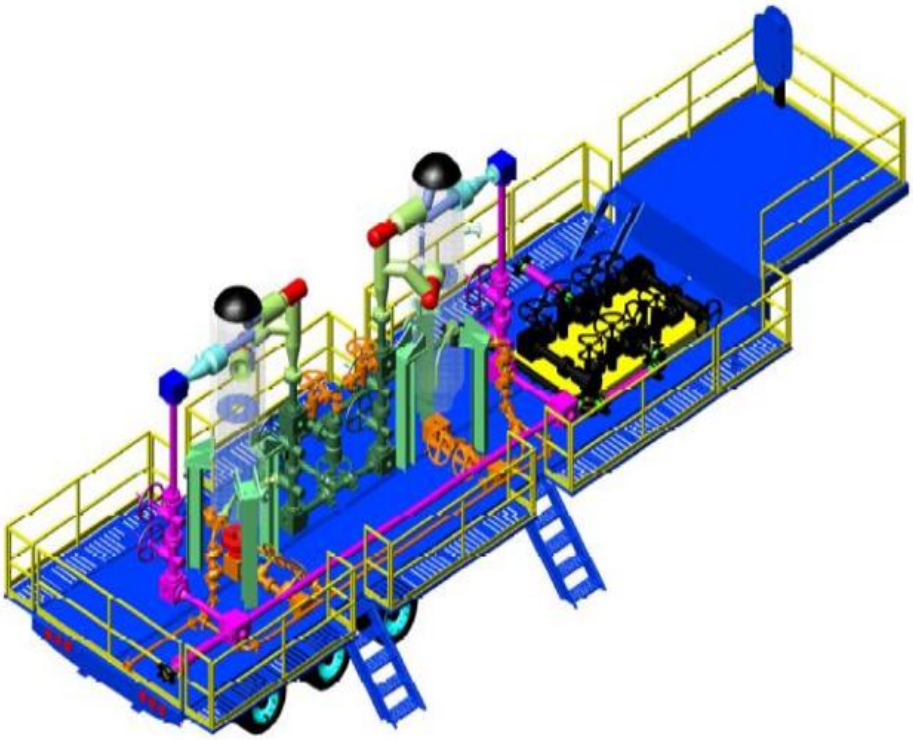

Asset Specification

Surface Safety Valve

- Size: 41/16 Flange In/Out
- Temp Rate: P + U
- Specification: API Spec 6A, Annex F, PR 2, PSL 3. API 6AV1 Class II/III qualification, fire-safe certification (API 6FA), fail-safe closed design
- Only Magnum Type from WOM accepted.
- Supplier to provide 2 complet sets of spare parts

Sand Management System (Sand Catcher)

- Size: 41/16 Flange In/Out
- Temp Rate: -20 to -250 F
- Specification: API Spec 6A, PR 2, PSL 3. API Spec 6AV1, Class II or III or equivalent sandy service qualification.
- WP15kpsi Dual Pot Sand Filter Unit
- Suppleir to provide 5 complete sets of spare parts for 2 1/16 gate valves
- Suppleir to provide 5 complete sets of spare parts for 3 1/16 gate valves
- Suppleir to provide 6 complete sets of spare parts for 4 1/16 gate valves
- Supplier to provide Auto clave 15 K rate fittings (15 ball valve QTY:30 , 15 K needle valve QTY:30 , Plug fititngs qty:30) only backer type accepted

Connection and Spools Preferred to be coated

- Refer to the below P&ID for Sand Catcher design.

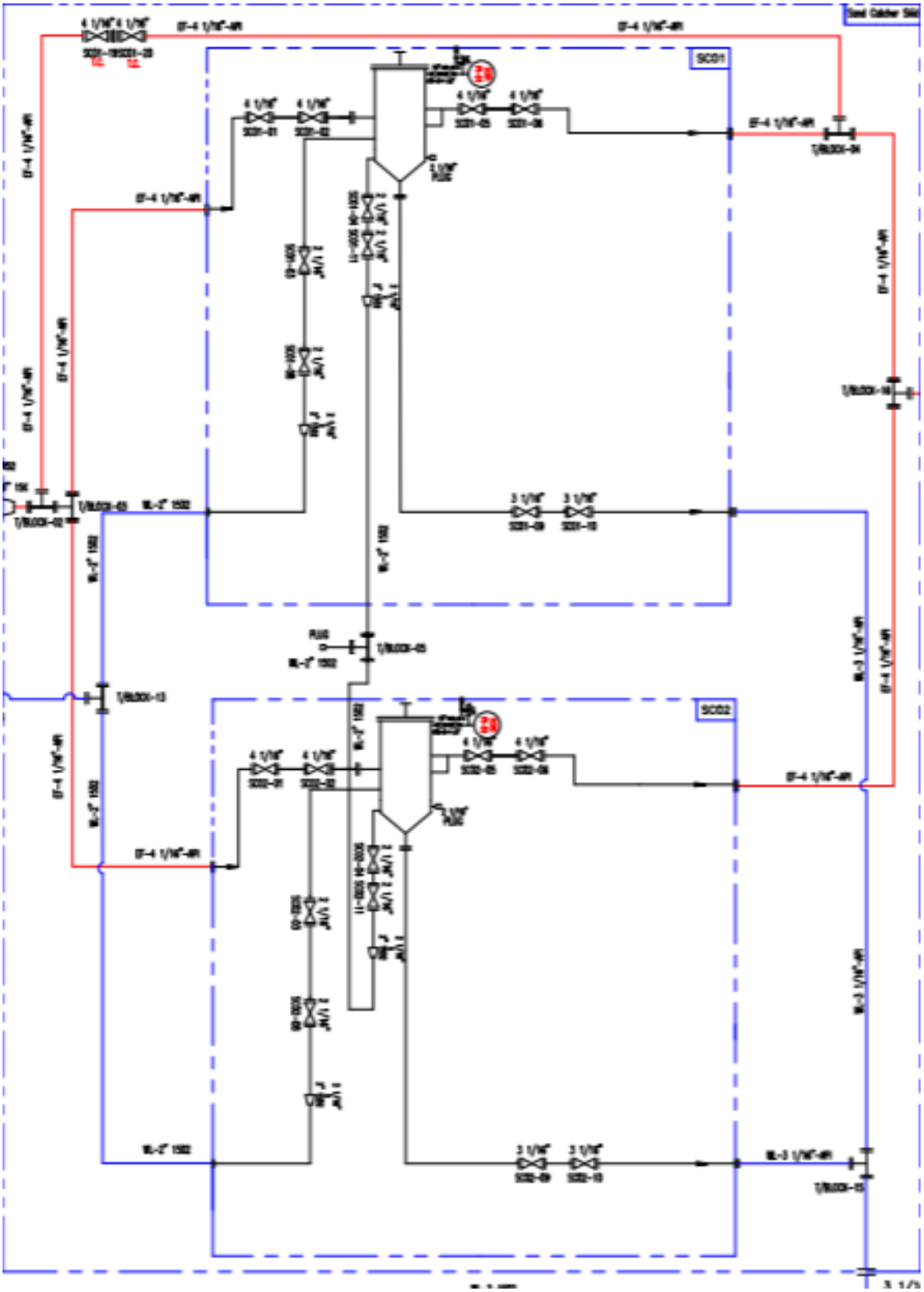

SAND CATCHERS	*Certifying authority: DNV*	*Design Code*
Vessel Size : 630mm ID x 3000mm T/T	*MAWP: 15,000 psi*	*Material AISI 4130*
Inlet: 4 1/16" FLG	*Working temperature: –20 to 121°C*	*API 6 PSL 3 PR 2*
Outlet: 4 1/16" FLG	*Man way: 7 1/16" 10K GLG*	*Design codes: NACE MR 01-75*
Drain outlet: 3 1/16" FLG	*Capacity: 1.197 m3*	*Safety devices:*
Flush inlet: 2 1/16" FLG	*Gate Valves: 4"1/16, 3"1/16 2"1/16 15K*	*Pressure relief valve (PSV) N/A*

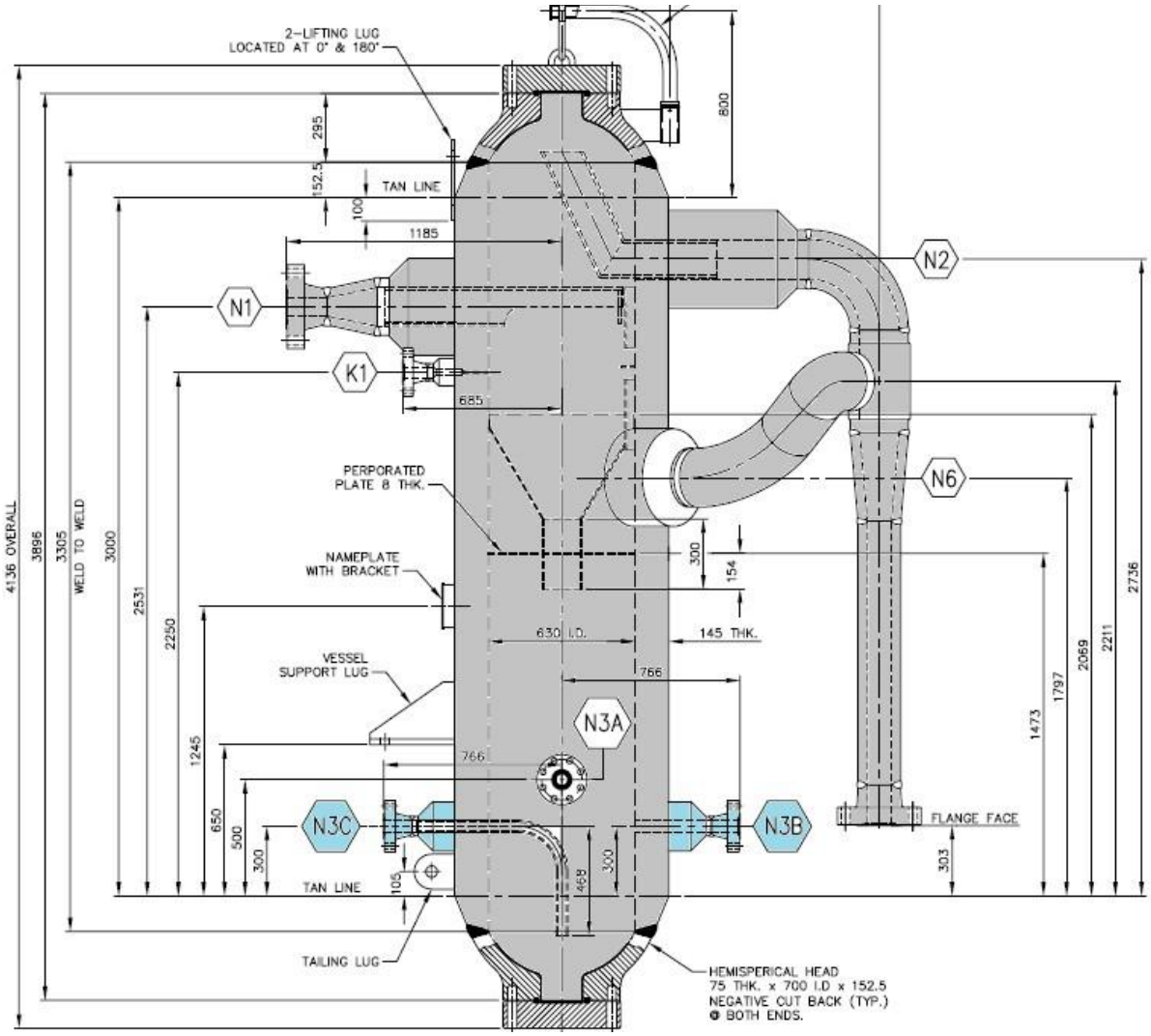

Double Block Choke Manifold:

- Size: 41/16 Flange In/Out
- Temp Rate: P+U, DD or EE
- Specification: API Spec 6A, PR 2, PSL 3 design requirements or greater.
- Only Magnum Type from WOM accepted.
- Fixed chokes in both flow paths.
- Two complete sets of fixed chokes shall be supplied in the following increments:
- Supplier to provide 4 complete set of spare parts for the 4 1/16 gate valves
- Design to have boom to left the cap whilke changing choke manifold

$^{8}/_{64}$-inch to $^{32}/_{64}$-inch in $^{2}/_{64}$-inch increments.
$^{32}/_{64}$-inch to $^{64}/_{64}$-inch in $^{4}/_{64}$-inch increments.
$^{64}/_{64}$-inch to $^{128}/_{64}$-inch in $^{8}/_{64}$-inch increments.

Data Header QTY:3

- Size: 41/16 Flange In/Out
- Temp Rate: -20 to 250 °F
- Specification: Conform to ANSI/ASME B31.3 or the spools (adapter and spacer) requirements of API Spec 6A
- Metal-to-metal seal connections
- Each Data header with a minimum of 10 instrumentation tapings (1/2' NPT)

4 1/16 Pipe Spool 20 Meters with 2-way Blocks QTY: 4

Size: 41/16 Flange In/Out

- Temp Rate: -20 to 250 °F
- Specification: Conform to ANSI/ASME B31.3 or the spools (adapter and spacer) requirements of API Spec 6A
- Metal-to-metal seal connections

Trailer Specifications

- 3 Axcell min
- sidewalk 0.5 meters each side requirements of API Spec 6A
- Hand reel 1.2m Hight
- Mounted with 6 Explosive proof light
- Minimum 4 Jacks
- 3.5' king Pin
- Follow ROP and RAS Procedure
- Max Hight 5.4 meters with Highest point of Sand catcher.

1.2.3 Category 3 – 4 Phase Seprator 2160 psi

Asset Specification

- Separator Type 4-Phase (Oil, Water, Gas, Solids/Sand)
- Operating Pressure 2160 psi
- Design Temperature | 300° F
- Capacity | 90 MMSCFD
- Service | Sour Service (H2S environment)
- Vessel Dimensions 48" ID x 15' S/S
- Design and construction must comply with ASME VIII Div.2, ANSI B31.3, DNV 2.7-1, H2 S (NACE MR0175)
- Materials must meet NACE MR0175/ISO 15156 standards for H2S service (sour gas).
- Full material traceability (MTRs) required for all pressure-retaining components.
- Inlet diverter for primary separation.
- Efficient mist extraction system for gas phase.
- Weir plates or bucket and weir arrangement for optimal oil/water interface control.
- Dedicated sand jetting/collection system
- High/Low pressure alarms and shutdown valves (PSV sizing calculations required).
- Interface level control (Oil/Water) and Level Control Valves (LCV).
- Temperature and Pressure gauges/transmitters with remote monitoring capability.
- Hydrostatic testing at 1.3x or 1.5x design pressure (per code).
- Radiographic testing (RT) and Magnetic Particle (MT) or Dye Penetrant (PT) examination of critical welds.
- Coating specifications suitable for the operational environment.
- General Arrangement (GA) drawings.
- P&ID showing process flow and instrumentation.
- Calculation reports (Wall thickness, nozzle loads, lifting lugs).
- Welding Procedure Specifications (WPS) and Procedure Qualification Records (PQR).
- Final Data Book including test certificates and material certifications.
- E&H (Enderson Houser) Coriolis meter installed in each outlet line, this will be only excepted
- Supplier to provide 4 outlet x-overs, types to be finalized upon award
- Non-return inlet valve
- Gas blow-by protection
- Fail-open gas valve philosophy
- Fail-closed liquid level valves
- Low level trips
- Blowdown system
- Certified metering accuracy
- Supplier to provide outlet x-overs QTY:4 , sizes will be agreed upon award
- Supplier to provide additional Enderson Houser meters as back up 2’’ water, 2’’ & 3’’ oil & 4’’ gas) QTY:1 each

1.2.4 Category 4 – Pumps and Igntion System

Following is the List of Asset Required for Category 4

SR.	EQUIPMENT	QTY	Comments
1	Emergency Shut down sytem	6	
2	TRSSV Pump	6	
3	Igntion system	6	

Asset Specification

Emergency Shut Down

The ESD system function is to control well by activating valves. The ESD panel can operate, 2X SSV (Surface Safety Valve), and UHMV (Upper Hydraulic Master Valve). The valves are driven by hydraulic pressure. Electrical/pneumatic, ESD remote stations, high/low pilot, electrical/pneumatic sand probe can be tied up with the ESD panel station to enable shut down the valve in case of an emergency.

The ESD is used when require a quick closure valves in case of burst pipe, high pressure, sand erosion, fire, and malfunction equipment. The closing time should be less than 10 seconds. ESD remote station set up will able to meet this closing requirement and been tested for 200 meters distance.

The ESD control panel consists of a pneumatic/hydraulic control system. The ESD panel is equipped with hydraulic pumps and manual pumps (as backup), interface valves, relief valves, air regulator, pressure regulator, hydraulic reservoir (including a filtration package), hydraulic lines (which are supplied and return to valve), strainer and fusible protection link.

- Operate 2 SSV and Master valves
- Hyd hose preesure rate 6000 psi
- Penumatic hsoe rate 200 psi
- Equiped with Hi and low pilots QTY:6
- Equiped with remote stations QTY:6
- Equiped with PRV
- All accessories to operate should be included.
- Abraj is opened to Except one skid pump capable to providing independent hydrulic pumps with propper PSV in place and accessories to operate HYD SSV , HYD Master Valve and HYD TRSCSSV

TRCSSSV Pump

The objective is to procure a reliable self-contained, portable High-Pressure Hydraulic Control Unit (HPU) capable of delivering stable hydraulic fluid pressure up to 20,000 psi for the operation and testing of Tubing Retrievable Surface Controlled Subsurface Safety (TRCSSS) valves.

- output Pressure Range 0 – 20,000 psi (adjustable)
- Pump Type: Air-driven
- Fluid Compatibility: Compatible with standard hydraulic oils and water-glycol mixtures
- Control System: Precision needle valve for fine pressure adjustment
- Pressure Monitoring: Dual high-pressure gauges
- Safety Features: Integrated Pressure Relief Valve (PRV)
- Connections: High-pressure Autoclave or equivalent industry-standard fittings
- Hazardous Rating** | ATEX/IECEx Zone 1 or Zone 2 certification (if applicable)
- Abraj is opened to Except one skid pump capable to providing independent hydrulic pumps with propper PSV in place and accessories to operate HYD SSV , HYD Master Valve and HYD TRSCSSV

Ignition System

The objective is to procure a reliable, robust, and automated pilot ignition system designed for flare gas/oil disposal during well testing operations. The system must ensure 100% ignition reliability, fail-safe operation, and compliance with all relevant safety standards in hazardous environments (Zone 1/2).

- Automated Electronic Pilot Ignition System
- ATEX / IECEx certified for Zone 1 or Zone 2 operation
- Instrument air/gas or electrical ignition
- Capable of maintaining stable flame in wind speeds
- High-energy spark or continuous pilot flame

1.2.5 Additional list of Accessories

Following is the List of Asset Required for Additional Accessories

SR.	EQUIPMENT	QTY	Comments
1	2'' 1502 10k Pipes	130 meters	Different lengths (lenghts will confirm upon award)
2	2'' 1502 10k Elbows	20	
3	2''1502 10k low Torque valves	22	
4	2'' 1502 10k check valves	10	
5	2' 1502 10 k T-pieces	6	Connection to be finalized upon award
6	2'' 1502 10k Pressure Relive valve	4	
7	2'' 1502 10k Adjustbale bleed off	4	
8	3'' 1502 10k pipes	75	Different lengths (lenghts will confirm upon award) we might change around 30 meters of the pipes to 3'' 2022, this will be agreed upon awarded
9	3'' 1502 10k elbows	10	
10	4'' 602 pipes	40	Different lengths (lenghts will confirm upon award)
11	4'' 602 Elbows	16	
12	6'' 600 Flare lines	500 meters	Includes studs and QTY: 200 OF GAS GETS and 12 Elbows
13	X-over 5 1/8 to 4 1/16 10 K flange	4	Sizes might change will confirm upon award
14	X-over 5 1/8 to 4 1/16 15 K flange	2	cd
15	X-over 3 1/16 10K – 3'' 1502 10k wing	2	
16	X-over 3 1/16 15K – 3'' 1502 10k wing	2	
17	X-over 2 1/16 10k – 2'' 1502 T	2	
18	X-over 2 1/16 15k – 2'' 1502 T	2	
19	X-over 5 1/8 10k to 2'' 1502 T	2	
20	X-over 5 1/8 15k to 2'' 1502 T	1	
21	Cement Blocks 3 Ton	8	To be used as ancored in top of pipes
22	Flow line sfatey Restraints high pressure 10k	30	30 sets with differnt length

23	Flow line sfatey Restraints low pressure 2000 psi	30	30 sets with differnt length
24	Pipe Baskets for 6’’ 600 to accumdate 200 metrs	2	Design will be agreed on upon award
25	Pipe basket to accoudate 2’’ and 3’’ 1502 pipes with elbows	3	Design will be agreed on upon award
26	Pipe stands (flow line stands (Flexible adjustment	30	
27	Frac Tank	2	Capcity 500 bls, Equipped with sigh glass , , Hnadrails , passes Opal and ROP
28	Ranarex	1	Used to measure gas density
29	2 1/16 Gate Valves 10 k MCM Oil Tools brand	6 set	6 Complete spare parts for manula gate valves includes O-rings , Gates, seat ring, body pushing, stem
30	3 1/16 Gate Valves 10 k MCM Oil Tools brand	6 set	6 Complete spare parts for manula gate valves includes O-rings , Gates, seat ring, body pushing, stem
31	4 1/16 Gate Valves 10 k MCM Oil Tools brand	14 set	14 Complete spare parts for manula gate valves includes O-rings , Gates, seat ring, body pushing, stem
32	6’’ 600 Check valve	2	
33	6’’ 600 3 way diverter manifold , class 600 rate 2160 psi	1	Valves must be turnning ball valves (brand JC)
34	6’’ 600 dataheader	2	

Asset Specification

All the assets to comply with the

- Flow pipe: API 5L | ASME B31.3, B31.4, B31.8
- Weco unions: API 6A, API 16C | NACE MR0175, API RP 14E, ASME B16.34 |
- Elbows & T-pieces: ASME B16.9, ASME B16.11 | ASTM A234, MSS SP-75, API 16C (for integral) |
- Pipe racks: ASME
- Only the SPM/FMC brand is accepted for Treating Iron items.

1.2 Mandatory Technical Requirements

No.	Applicable Category	Mandatory Technical Requirements
1	General	The Bidder shall perform Factory Acceptance Testing (FAT) and submit the FAT report for approval prior to shipment.
2	General	The Bidder shall provide Operation & Maintenance (O&M) Manuals, Spare Parts Manuals, and As-Built Drawings.
3	General	The Bidder shall identify all critical spare parts and wear components.
4	Categories 1 & 2	The sand catcher shall be manufactured in Oman, and a valid Certificate of Origin

		shall be provided.
5	Categories 1, 2 & 3	The Bidder shall perform the mechanical design of the applicable vessel in accordance with ASME Section VIII, Division 1, where applicable.
6	Categories 1, 2 & 3	The Bidder shall submit design calculations, fabrication drawings, P&IDs, General Arrangement (GA) drawings, Quality Control (QC) documents, and Welding Procedure Specifications (WPS), where applicable.
7	Categories 1, 2, 3 & 5	The Bidder shall ensure compliance with all applicable API, ASME, and NACE standards.
8	Category 1	The Bidder shall perform system commissioning, functional testing, and loop testing and submit the corresponding test reports.
9	Categories 1, 2 & 3	The Bidder shall provide material certificates, welding records, NDT reports, pressure test reports, and the Manufacturing Data Book (MDB), where applicable.
10	Categories 1, 2 & 3	The Bidder shall submit a complete list of all proposed valve brands, including primary and optional brands, together with the unit price for each valve type, size, pressure rating, and material specification.
11	Categories 1 & 2	The Bidder shall provide only WOM brand gate valves.
12	Categories 1 & 2	The Bidder shall obtain all required ROP approvals and ensure the trailer complies with all applicable ROP, PDO, and OPAL requirements.
13	Category 4	The Bidder shall ensure that the ESD and Remote Auto-Ignition System comply with applicable IEC, IECEx and/or ATEX standards for hazardous-area installations.
14	Category 4	The Bidder shall provide system architecture drawings, wiring diagrams, I/O lists, cause-and-effect matrix, and software backup.
15	Category 3	The Bidder shall provide valid calibration certificates for all instruments, transmitters, detectors, and safety devices.

Common Comments:

- Pipes lengths for each pipe will be reviewed and agreed upon award
- Types of x-overs- t-pieces subjected to change but qty remain the same, final list will be decided upon award
- Pipe Rack design to be finalized upon award
- Cement Blocks design to be finalized upon award

Submission Documents

- Technical Proposal: Including compliance statements, GA drawings, ITP, (No pricing information).
- Commercial Proposal: Including category full rates with delivery time.
- Tracking Record for Similar Projects
- Vendor manfucture facility

Commercial Price Schedule

No.	Category	SAP	Description	UOM	Qty	Price Per Unit	Total Price
1	Category 1 – Sand Management Mounted Trailer	1005904	Trailer-Mounted Sand Management System (10,000 PSI	No	1		
2	Category 2 – Sand Management Mounted Trailer	1005905	Trailer-Mounted Sand Management System (15,000 PSI	No	1		
3	Category 3 – 4 Phase Separator	1003885	Trailer-Mounted 4-Phase Horizontal Test Separator – 2160 psi	No	1		
4	Category 4 – Pumps & Ignition system	1001124	Emergency Shutdown (ESD)	No	6		
		7000370	TRSSV Control Panel Service	No	6		
		1001403	Remote Auto-Ignition System	No	6		
5	**Additional list of Accessories for (Category 1,2)**	NA	Pipes X-overs Low Torque valves T-Pieces Cement blocks Pipe Racks Stands	No	1		

Commercial Requirements

1. The Bidder shall submit a firm fixed-price quotation, covering design, materials, fabrication, testing, and documentation.
2. The Bidder shall quote all prices in USD or OMR, as specified in the tender invitation.
3. The Bidder shall ensure that the quotation remains valid for a minimum of 150 days from the bid submission date.
4. The Bidder shall be permitted to participate in one, multiple, or all categories.
5. The Bidder shall provide a list of additional accessories applicable to Categories 1 and 2, including the price of each accessory.
6. The Bidder shall quote two delivery options: DDP and EXW (Ex Works).

Abraj Energy Services S.A.O.G.

Contract No. STC.260915.WS.8000679

Rate Agreement for Supply of Trailer Mounted Sand Management System & Well Testing Unit Packages

C5, Schedule of Rates

SCHEDULE 2: PAYMENT SCHEDULE

Part 1 – Commercial Table

1.1 **The Contract Price is as follows:**

[insert breakdown of prices for the Goods and the Related Services (if required)]

1. **Delivery Period:**
2. **Payment Term: 60 Days**
3. **Delivery Term:**
4. **Performance Bond: 28837.46 OMR /USD 75,000**
5. **Warranty Period: 12 Months + Warranty Extended Period 12 Months.**
6. **Type of Contract:** Rate Agreement / Call-Off. This contract is not confirmation to start the work. A Purchase Order / Work Order will be issued whenever the service is required.

1.2 **Liquidated Damages:**

The Liquidated Damages amount equivalent to [1]% of the Contract Price for each full day of delay in the supply of the Goods after the Delivery Date and/or each full day of delay in the completion of the Related Services after the date specified in the Purchase Order provided that the Liquidated Damages shall not exceed a total of 10% of the Contract Price.

1.3 **Continues supply of services:**

Availability of services post acceptance of services by Company is (20) years.

Part 2 – HSE Non-Compliance:

2.1 HSE NON-COMPLIANCE

- Without prejudice to any other Clauses of the Contract and without limiting the Company's rights and remedies for contractual non-conformance, in the event of Contractor's non-conformance or violation of any of the HSE requirements listed below or any applicable policies imposed by the company clients, any regulatory body or quasi-regulatory body, Company will issue a monetary penalty as specified in - below, for each such non-conformance or violation to be deducted from Contractor's next invoice payment. Additionally, and at Company's sole discretion,

Company reserves the right to exercise the following remedies, individually or collectively, in addition to any other rights and remedies provided under the Contract:

- Suspension of the personnel involved in the violation(s) or non-conformance(s);
- Termination of personnel(s) involved in the violation(s) or non-conformance(s) and barring of such employees from all Company contracts;
- For documented repeated occurrence, and after notifying the Contractor, Company may implement the necessary and agreed corrective action at the cost of Contractor;
- For persistent non-conformance, Company may take action for suspension of Contractor and / or termination of Contract and removal of the Contractor from the Company approved Contractor lists.

2.2 HSE Penalties:

Sr. #	HSE default	Penalty
1	Appointing and sending manpower to Abraj sites without prior notification	100 OMR
2	Failed to provide required PPE to their deployed personnel	100 OMR
3	Failed to provide SOP / JSA / Lift Plan for required task	150 OMR
4	Expired manpower Mandatory HSE Trainings	150 OMR
5	Expired manpower periodic Medical examination / sending manpower without valid medical report	150 OMR
6	Failed to implement manpower rotation schedule	200 OMR
7	Mismatched or expired manpower Labor / ID cards	200 OMR
8	Failed to provide periodic maintenance of provided equipment or timely repair	200 OMR
9	Failed to provide a competent workforce as per the contract requirement	300 OMR
10	Equipment with expired Inspection or defective equipment (tires, lights, alarms etc.) provided on Abraj Locations	300 OMR
11	Failed to close out the actions from annual audits or actions identified by site team	300 OMR
12	Failure to Implement Summer Mitigations or Provide Adequate Rest and Break Times for Workers	300 OMR

13	Failed to inform site team for Journey to Abraj sites / Travel without journey plan	500 OMR
14	Failed to use approved vehicle for Journey for Abraj Field Locations	500 OMR
15	Failed to follow Safe Journey Requirement (Violation will consider each occupant separately) Failed to follow Journey management (Over speeding, driving more than 200Km without rest break, seat belt etc)	500 OMR
16	Failed to share Monthly HSE KPI (For Level 1 and Other Nominated Contractors)	500 OMR
17	Failed to follow Abraj / client LSR (Permit to Work, Working at Height etc.)	500 OMR
18	Violation of Abraj HSE Policies (Drugs & Alcohol or Driving Policies etc.)	500 OMR
19	Failed to participate in incident investigation / Hide incident details / Failed to Report an Incident or Near Misses	500 OMR
20	Neglecting to Maintain valid ROP registrations, RAS, and Any Mandatory HSE Inspections Required for Vehicles and Equipment	500 OMR
21	Failed to present in Abraj Critical Safety Meetings to discuss HSE Performances without Justification	500 OMR

Note: In case if client issues an HSE default which is higher than the penalties listed in the table above, the higher client-issued HSE default penalty will apply.

Abraj Energy Services S.A.O.G.

Contract No. STC.260915.WS.8000679

Rate Agreement for Supply of Trailer Mounted Sand Management System & Well Testing Unit Packages

C6, HSE

TABLE OF CONTENTS

(Health, Safety, and Environment) Requirements 3

Contractor HSE Qualification Levels 4

HSE Management System (HSE–MS) 4

Road Safety & Logistics 6

Environmental Management 6

Emergency Preparedness & Response 6

Incident Management 7

Occupational Health Management 7

Contracting Control 7

Enforcement and Penalties 8

1.HSE

(HEALTH, SAFETY, AND ENVIRONMENT) REQUIREMENTS

1. General HSE Obligations

1.1 During the supply of Goods and the performance of Related Services, the Contractor shall be fully responsible for:

- Providing all necessary information to the Company and relevant third parties concerning any potential hazards associated with the supply and/or operation of the Goods.
- Protecting the environment and preventing pollution or degradation arising from its operations.
- Implementing best industry practices and complying with all applicable Health, Safety, and Environmental (HSE) laws, regulations, and Company-issued rules, policies, and procedures.

1.2 Without limitation or prejudice to C2, the Contractor shall take all practicable steps to ensure that no act or omission:

- Causes or contributes to any hazard, harm, or serious harm to any person at or near the Delivery Point.
- Results in a breach of any statutory duty or legal obligation.
- Exposes the Company or any other party to regulatory proceedings or prosecution under applicable laws.

1.3 The Contractor shall not use or permit the use of any materials, substances, or processes that may:

- Release contaminants or cause adverse environmental effects.
- Breach any environmental law, regulation, or permit condition.
- The Contractor further warrants that all hazardous materials supplied shall be properly labeled, and each consignment shall be accompanied by relevant safety data sheets and handling instructions.

1.4 Any failure to adhere to the requirements of this HSE Clause shall constitute a material breach of contract and a defect in the Service. The Company reserves the right to apply remedies, including re-performance, replacement at the Contractor's cost, termination, and the imposition of penalties as defined in C5 (Payment Schedule), without prejudice to any other rights under C2 – Indemnity and Consequential Damages.

2. Contractor HSE Qualification Levels

To ensure proper HSE control, competency assurance, and alignment with Abraj Energy Services requirements, all contractors shall be classified into one of the following levels based on the nature of their activities, risk exposure, and frequency of site interactions.

Level	Risk Category	Criteria	Min Qualification Criteria
Level 1	High-Risk	Direct Operational Activities / Direct operational work on Abraj sites	• Full HSE–MS aligned with Abraj, OPAL, and ISO 45001 • Competent and certified workforce • Annual HSE audits • IVMS compliance (vehicles) • Detailed risk assessments and emergency plan
Level 2	Medium-Risk	Contractors who visit Abraj sites on a call-out or periodic basis with moderate HSE exposure.	• Valid certifications for job-specific tasks • Site induction completion • Activity-based risk assessments • Compliance with permit-to-work and site rules
Level 3	Low-Risk	Indirect or Short-Duration Services or Material Supply to Abraj warehouse.	• Site induction for visitors • Compliance with basic HSE requirements • Activity-specific controls when required

3. HSE Management System (HSE–MS)

3.1 **Establishment of HSE–MS**

The Contractor shall establish, implement, and maintain a documented HSE Management System consistent with:

- -Sultanate of Oman Ministry of Labor and relevant national HSE regulations.
- -Abraj Energy Services HSE Management System requirements.
- -OPAL HSE–MS Guidelines or equivalent recognized standards.
- -ISO 45001 (Occupational Health & Safety Management System).

Where discrepancies exist between the Contractor's HSE–MS and Abraj requirements, these shall be addressed through an Interface Matrix defining responsibilities, procedures, and compliance measures.

3.2 **Core Elements of the HSE–MS**

The Contractor's HSE–MS shall, at a minimum, include

- HSE Policy & Objectives endorsed by senior management, with measurable targets and annual HSE plans.
- Defined Roles & Responsibilities for management, supervisors, HSE staff, and workers, integrated into job descriptions and appraisals.
- Planning & Risk Management, including hazard identification, risk assessments, legal compliance register, and emergency preparedness plans.
- Implementation & Operations, covering standard operating procedures, permit-to-work systems, toolbox talks, job safety analyses, lifting plans, and management of change (MoC)
- Performance Monitoring, through leading/lagging indicators, inspections, behavior-based safety programs, and audits.
- Corrective & Preventive Actions processes with root cause analysis and action tracking to closure.
- Management Review & Continual Improvement with documented reviews, assigned actions, and evidence of continuous improvement.

3.3 **HSE Records & Documentation**

The Contractor shall maintain verifiable, auditable HSE records, including incident reports, statistics (LTIF, RTAF), man-hours, IVMS data, emergency drill records, waste management logs, and monthly HSE performance reports in accordance with Abraj requirements.

3.4 **Competence, Training & Awareness**

All Contractor and subcontractor personnel shall undergo:

- Site-specific HSE induction prior to commencing work.
- Job-specific and high-risk activity training (e.g., confined space entry, working at height, defensive driving).
- Periodic refresher and awareness sessions.
- Records of all training, qualifications, and competence assessments must be maintained and made available for audit.

3.5 **Communication & Consultation**

The Contractor shall ensure active workforce participation in HSE through toolbox talks, safety committees, suggestion schemes, and dissemination of safety alerts and lessons learned.

4. Road Safety & Logistics

- All Contractor vehicles and drivers shall comply with OPAL Road Safety Standards and applicable local traffic regulations.
- Vehicles shall be fitted with In-Vehicle Monitoring Systems (IVMS) and Fatigue Management Cameras, with data accessible to Abraj upon request.
- Preventive and predictive maintenance shall be conducted per manufacturer specifications, and records shall be retained.
- The Contractor shall report monthly road safety statistics, including vehicle kilometers driven and driver behavior data.
- Compliance with the Abraj commuting procedure and maintenance of approved hub lists is mandatory.

5. Environmental Management

The Contractor shall:

- Comply with all applicable environmental laws, regulations, and Abraj requirements.
- Maintain an Environmental Aspects and Impacts Register to identify, evaluate, and mitigate risks.
- Implement waste management procedures covering segregation, labeling, licensed transport, and final disposal.
- Promote recycling and recovery, adopting zero-discharge practices in sensitive zones.

- Maintain spill prevention measures, trained responders, spill kits, and conduct annual spill response drills where applicable.

6. Emergency Preparedness & Response

The Contractor shall develop, implement, and periodically test a documented Emergency Response Plan (ERP) aligned with Abraj ERP and relevant government requirements.
The ERP shall clearly define emergency roles, drill frequencies, communication protocols, and procedures for various scenarios (fire, explosion, medical, environmental, and vehicle-related emergencies).

7. Incident Management

The Contractor shall implement a comprehensive Incident Management Procedure addressing injuries, illnesses, near misses, property damage, vehicle incidents, environmental spills, and high-potential events.

- Serious incidents must be reported verbally to Abraj within 1 hour and followed by a written preliminary report within 24 hours
- Detailed investigations, including root cause analysis (TapRooT®, 5 Whys, BowTie), shall be completed per Abraj Incident Management Procedure.
- All corrective actions shall be tracked to closure, with lessons learned communicated across all workforce levels.

8. Occupational Health Management

The Contractor shall implement an Occupational Health Program covering:

- Pre-employment and periodic medical fitness assessments.
- Fatigue management, working hours control, and heat stress prevention.
- Monitoring of occupational exposures (noise, dust, chemicals, radiation).
- Health surveillance, vaccination programs, and wellness campaigns.
- Maintenance of first aid facilities, trained responders, and medical arrangements with local clinics.
- Records of occupational health data shall be maintained and integrated with safety performance reporting.

9. Contracting Control

In cases where an Abraj Contractor intends to sub-contract personnel or equipment under the awarded scope of work:

- Sub-contracting shall not extend beyond one layer of sub-contractor.
- Prior to awarding any sub-contract, the Contractor must obtain Abraj's written approval confirming that:
    - The proposed sub-contractor's personnel possess the required qualifications, competencies, and valid certifications.
    - All sub-contracted assets, equipment, and vehicles comply with Abraj's HSE standards and relevant legal requirements.
- The primary Contractor shall remain fully responsible for ensuring that the approved sub-contractor adheres to all HSE obligations, reporting protocols, and performance requirements stipulated in this Contract.

9. Enforcement and Penalties

Failure to comply with these HSE obligations constitutes a breach of contract. The Company reserves the right to:

- Suspend or terminate work until compliance is achieved.
- Impose contractual penalties as defined in the Payment Schedule C5.
- Recover costs incurred due to re-performance, remedial actions, or regulatory sanctions.

Abraj Energy Services S.A.O.G.

Contract No. STC.260915.WS.8000679

Rate Agreement for Supply of Trailer Mounted Sand Management System & Well Testing Unit Packages

C7, ICV

ANNEXURE – 08 IN COUNTRY VALUE (ICV)

1- Workforce: Number of Omanis Employed

Table A - : WORKFORCE related to execution of this specific contract duration with details of Main/Lead Contractor or Sub- Contractor.

	Workforce Category	Senior Management			Professional			Supervisory			Skilled/Semi Skilled		
		HD	MH	CP	HD	MH	CP	HD	MH	CP	HD	MH	CP
Contractor	Omanis												
	Expatriate												
Sub-Contractor	Omanis												
	Expatriate												

2- Use of Local Goods/Services

Bidder must provide details in the format below showing local goods/services proposed to be utilized in the performance of the Services. If none: Bidder shall so state.

a- Goods Made-in-Oman

#	Goods Description	Manufacturer /Provider	Address	Quantity	% of total quantity sourced from local manufacturer	Total value of local manufactured goods
1						

2						
3						

b- Goods Procured in Oman

#	Goods Description	Location of International Manufacturer	Local Supplier Address	Quantity	% of total Contract quantity to be local supply	Total value of local manufactured goods
1						
2						
3						

Summary of Tables A & B		
Total Value of Goods Made in Oman (OMR / USD)	Total Value of Goods Procured in Oman (OMR / USD)	Total Value of Goods Procured from Overseas (OMR / USD)
$0	$0	$0

c- Local Services Obtained in Oman

#	Type of Service	Proposed Subcontractor Address	Value added	% of total Contract value
1				
2				
3				
4				

Summary of Tables C	
Total Value of Local Sourcing (USD / OMR)	**Total Value of Overseas Sourcing (OMR / USD)**
$0	**$0**

ICV Terminologies/Definitions
Table B - Work Force
HD stands for Headcount: "Headcount" means the number of full-time equivalent employees or in-house Contractors/agency staff within the Contractor or 3rd Party Sub-Contractor who will be involved in execution of the Contract.
MH stands for Man-hours: "Man-hours" means the number of hours of work undertaken in execution of the Contract (only the actual hours written, or to be written, to Contract execution are included).
The method of calculation and reporting is as follows;
MH= Contract Duration x number of headcount of that category
For example, contract awarded for a period of 4 years, with 2 professional resources working full time on the execution of the contract:
4 years x 12 months x 30 days x 8 hours x 2 professionals = 23,040 Manhours

CP stands for Compensation: "Compensation" means the sum of Man hours multiplied by an average all-inclusive average hourly rate. Average hourly rate calculated from Gross Salaries pro rated.
The currency shall be in USD.
For example, contract listed the 2 headcount Professional as Drilling Engineer and Chemical Engineer with a monthly salary of $2,000 and $1,800 respectively. The total monthly salary shall be inclusive of PASI and other permanent allowances such Housing and Transport allowance.
The formula to calculate the average hourly compensation rate will be as follows:
Drilling Engineer Monthly salary divided by man-hours working per month: 2000 USD / (22 days x 8 hours)= 11.4 USD as hourly rate
Chemical Engineer Monthly salary divided by man-hours working per month: 1,800 USD / (30 days x 8 hours)= 7.5 USD as hourly rate
Total hourly rate for both resources = 11.4+7.5= 18.9
Average hourly rate for both resources =18.9/2= 9.5
The compensation per hour as calculated above to be included shall 9.5 USD/hour
JOB POSITIONS
6.**"Senior Management"** means a member of the decision-making executive of a function within Contractor or sub-Contractor Company. -CEO and all managers titles who reported to CEO.HR Mangers , Admin manager , finance manager, project manager .etc..

7."Professional" means an individual who has completed bachelor degree related tertiary education and achieved professional certifications status within a professional body. Includes chartered engineers and accountants, lawyers, architects, procurement professionals and Engineer.
8."Supervisory" means a worker who manages a team of at least two subordinates (but who is not considered part of the Senior Management team, nor a Professional). Supervisors include construction foreman, equipment overseers, business administration team leaders etc.
9."Skilled" means a worker with a high level of technical expertise accumulated over a number of years (but not a member of a recognised 'profession'). A skilled worker may have attended a Technical College or learned their skill via a formal apprenticeship or on-the-job over a number of years. Includes: electricians, scaffolders, welders, crafts, business admin, personnel assistants, computer programmers, equipment and machinery operators.
10."“Semi-skilled” means workers with a skill set acquired in a short space of time (a few weeks or months). Following short periods of training a casual labor may become semi-skilled, thus demonstrating how the Contract has contributed to human capacity in Oman. Semi-skilled positions include secretaries, drivers, meet and greet services, fencing, block laying, basic construction skills etc.

Abraj Energy Services S.A.O.G.

Contract No. STC.260915.WS.8000679

Rate Agreement for Supply of Trailer Mounted Sand Management System & Well Testing Unit Packages

C8, Procedures for Contractors

SAP ARIBA, SERVICES ENTRIES, AND INVOICES

SAP Ariba, (E-Commerce)

SAP is an integrated software package that Company utilises to administer and manage its business, including authorising payments to contractors. Contractor is deemed fully familiar with the requirements of SAP.

Contractor shall ensure that the information held in SAP relating to Contractor is properly maintained.

SAP Ariba, E-Commerce is a platform are the primary digital system for invoicing and service entries.

Failure to adhere to this Article will result in the return of Contractor's invoice and invoice delayed payments.

SAP Service Entry

Contractor will be required to create service entries in SAP Ariba.

After completing the service entry, Contractor shall provide all documentation required for approval of the service entry to Company Personnel approving the service entry technically and financially.

Contractor is responsible for having a service entry created in the system to cover the performed Services and Company then approves the service entry. Contractor shall be informed automatically by e-mail/SAP of the associated Service Entry number and value when the Service Entry has been approved.

Submission of Invoice

Contractor shall not send an invoice to Company before payment is due in accordance with the Contract. Contractor accepts that failure to comply completely with the requirements of this article may delay payment of Contractor's invoices or Contractor may have the invoice(s) returned. To be specific, any invoice that does not completely comply with the requirements cannot be processed and will be sent back. This will be applicable to invoices with calculation errors as well.

APPENDIX 1: KEY PERFORMANCE INDICATORS

Sr.No	Quantitative KPI	Item Description	Result %
1	On-Time Delivery (OTD)	% of deliveries on or before the promised date	
2	Quality Performance	% of Accepted received items/service	
3	Discrepancy	% of pending rejected items/service (defects, non-conformance)	
4	Cost Avoidance	% of savings from avoided price increases or negotiated discounts compared to market trends	

Sr.No	Quantitative KPI	Item Description	Result %
1	Innovation / Value Addition	Measures implemented improvements delivering measurable efficiency, quality, cost, or process benefits	
2	End User Satisfaction	Feedback score from internal end-users on supplier service quality	
3	Compliance & Documentation	(Adherence to General contract terms, specs, certifications, etc.	
4	HSE Compliance	Assesses safety performance, incident rates, audit scores, and proactive compliance actions	