NODESTREAM

FLEX

Quick Start Guide

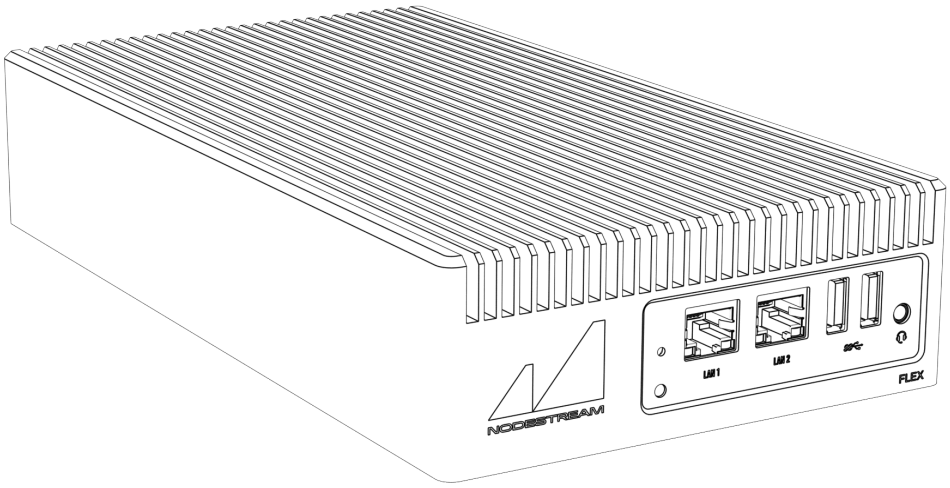

Live

Welcome to Nodestream Flex

Please read these instructions carefully before using this product, and save this quick start guide for future reference. See the User Manual for full details via the QR code on the back page.

In the Box

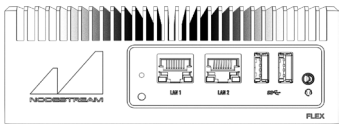

Nodestream Flex

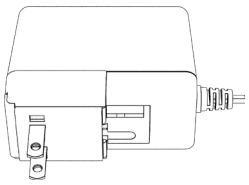

AC/DC PSU



2 x Surface Mount

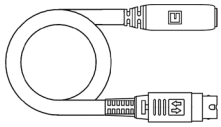

Power Cable
(4pin DIN to 2.5mm Barrel)

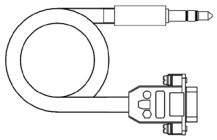

Serial Cable
(3.5mm to DB9)

Connections

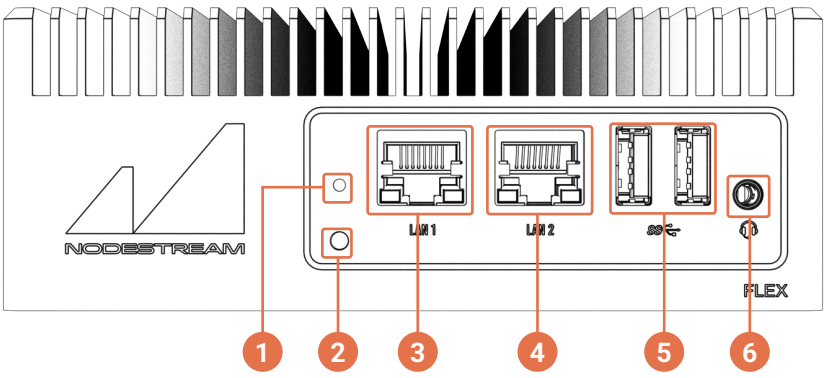

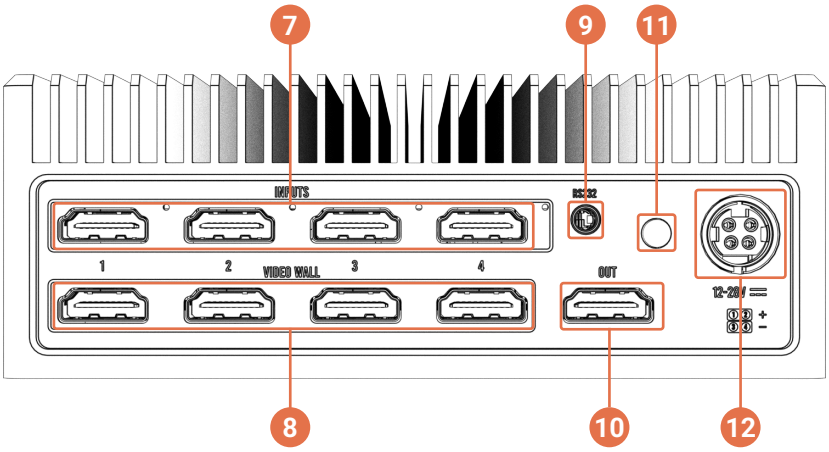

Connections / UI

1 **Reset Button**
Restart Device - Press 2 seconds & release

Factory reset device

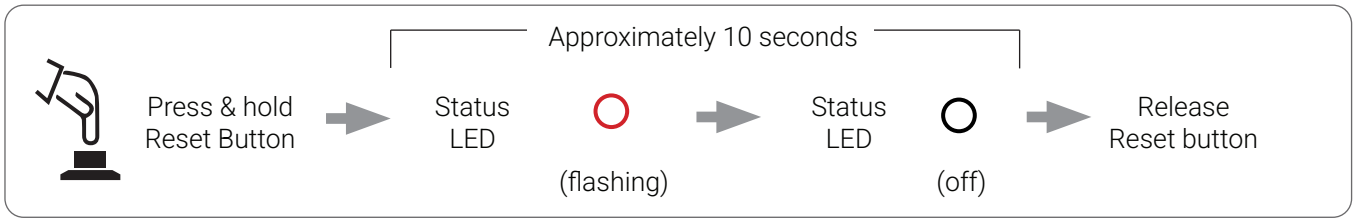

2 **Status LED**
RGB LED to indicate system status

BLUE - System start **GREEN** - Solid (streaming), Flash (idle) **RED** - Network/server issue

3 **LAN 1**
Primary interface for connection to your WAN

4 **LAN 2**
Secondary interface for connection to networks sources that differ to the primary

5 **USB A 3.0**
Connection of peripherals such as keyboard/mouse, camera

6 **Analog Audio**
Connection of analog audio input/output peripherals

7 **HDMI Inputs**
Video source inputs (Encoder mode only)

8 **HDMI Video Wall Outputs**
(Decoder mode only)

9 **RS232 Serial**
3.5mm TRRS. (/dev/ttyTHS0)

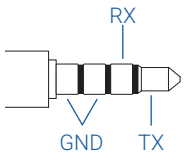

10 **HDMI Out**
"Pasthrough" display output

11 **Power Switch**
On / Off

12 **Power Input**
12-28VDC

Power redundancy is available for this device, Refer to the device User Manual for additional information.

Dimensions

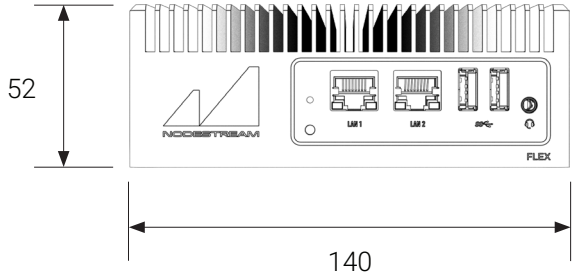

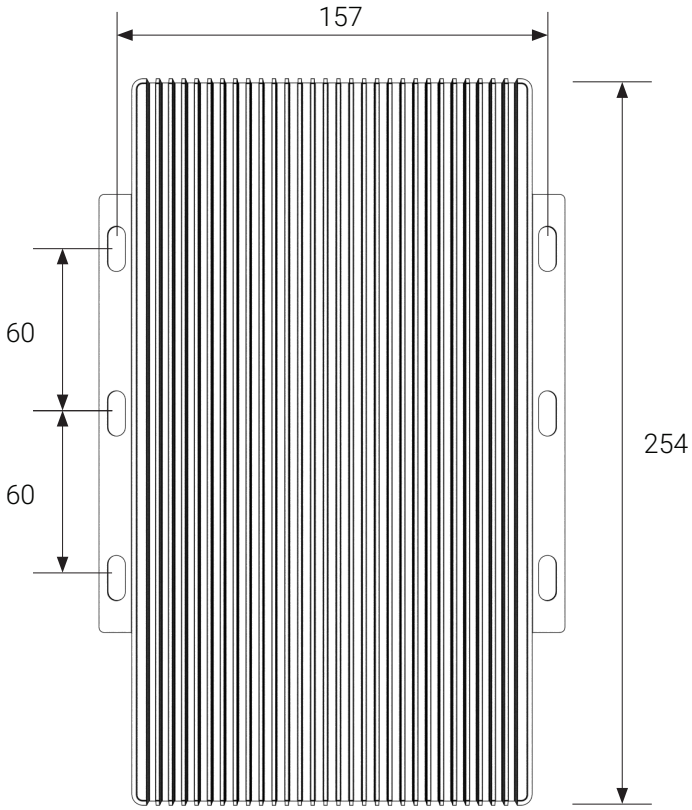

Installation

Freestanding or mounted using the supplied surface mount adapters or optional 19” rackmount shelf.

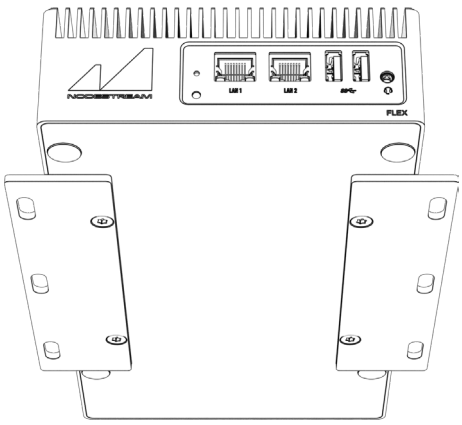

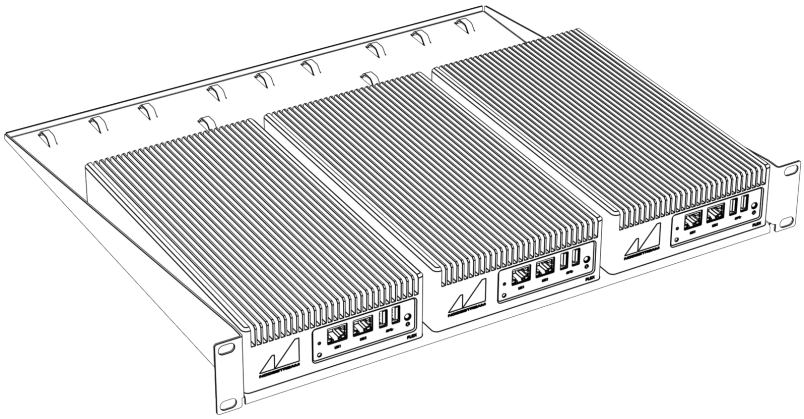

- Ensure adequate space around heat sink for cooling
- Where ambient temperatures exceed 35°C, 0.5m/s of airflow across the heatsink is required

Web Interface

1. Access the Web Interface

Via a computer on the same network

DHCP Enabled Network

From the web browser of a PC connected to the same LAN, navigate to:
device serial.local - e.g. au2518nsfx1a012.local, or the IP address of the device

Non DHCP Enabled Network

Configure the IPv4 network settings of a PC connected to the same LAN to:

IP	192.168.100.102
Subnet	255.255.255.252
Gateway	192.168.100.100

From a web browser, navigate to: 192.168.100.101

- Device will “fall back” to a static IP address when not connected to a DHCP enabled network - approximately 30 seconds after boot
- Due to the possibility of conflicting IP addresses, only 1 device can be configured at a time. Once configured, the device can remain connected

On the device

Press **alt+F1** on a connected keyboard

2. Login in - username & password = admin
3. Configure your network
4. Select device mode and configure your server on the “System” page

Once registered to a server, your device will need to be added to a group

Add your device to your Organization via the web portal

- Refer to the device User Manual for more information
- Add and manage inputs via you Nodestream X control application or NSLive portal

- Your WAN **MUST** be connected to LAN 1 of your device
- Nodestream devices require specific firewall settings to be in place. Refer to the User Manual for further information

User Resources

Contact and Support
support@nodestream.tech

Troubleshooting

Issue	Cause	Resolution
Device not powering	DC not connected	Confirm supply is connected and turned on
	Incorrect polarity	Confirm power input cable is connected correctly
	Faulty or incompatible supply	Test with alternative supply
		Ensure supply voltage meets required specifications, refer User Manual
Nodestream X "Server Connection Error" **Nodestream Live** "Could not resolve hostname" Status LED RED	Network not connected	Check Ethernet cable is connected
	Network settings incorrect	Check network settings, contact your Network administrator to diagnose network
	Firewall blocking comms	Ensure Firewall settings correct, see User Manual
	Not registered to server	Register device on your Nodestream server
No video input	Sources not connected, powered on or correctly configured	Confirm sources connected and powered on, refer User Manual for configuration
Forgot login or network details	N/A	Factory reset to defaults (refer "Connections / UI" on page 3)

EU REP TerrainQ Solutions UG (info@cert-rep.com ; +49 176 43242825)
Franz-Ehrlich-Straße 12, 12489 Berlin, Germany

UK REP Dallas Allardice (dallas.allardice@nodestream.tech ; +44 7921567416)
Overton Lodge, Methlick, Ellon, UK, AB41 7HT

Nodestream Technology Pty Ltd
7 Turner Ave, Technology Park
Bentley WA 6102, Australia
nodestream.tech

All rights reserved. This document is the property of Nodestream Technology Pty Ltd. No part of this publication may be reproduced, stored in a retrieval system or transmitted in any form or by any means, electronic, photocopy, recording or otherwise without the written consent of the CEO of Nodestream Technology Pty Ltd.