CAPELLA®

STAR®

OWNERS MANUAL

CONTENTS

Forward	5
Starting Model Year 2018	5

SAFETY

General	6
Notices, Cautions, Warnings And Dangers	7
General Operation or Vehicle	8-10
Maintenance	10-11
Labels and Pictograms	12-15

SPECIFICATIONS

General Specifications	16-19
Vehicle Dimensions	20-23
Turning Diameter and Incline	24-25
Capella H-Series Specifications	26-29

INTRODUCTION

Introduction to Controls and Indicators	30
Features, Key Switch and Direction Selector	31
Power Meter *(if equipped)*	32
Accelerator and Brake Pedal	32
Parking Pedal	33
Front and Rear Seating Indicators	34
Front Hip Restraint	34
Cup Holder	34
Steering Wheel	34
Rear Seat And Cargo Platform	34
Rear Hand Rails	35
Charger Receptacle	35
Rear View Mirror *(if equipped)*	35
Battery Compartment	35
Serial Number Location	36
Before Initial Use and Service Chart	37
Digital Display Monitor	38-41

GENERAL OPERATION OF VEHICLE

On-Board Chargers	42-43
How To Operate The Vehicle	44
Direction Selector Operation	45
Accelerator and Brake Pad Operation	45
Horn *(if equipped)*	45
Regenerative Braking	46
Pedal-Up Braking	46
High Pedal Disable Feature	46
Starting and Driving	47
Starting Vehicle On Hill	47
Coasting	47
Roof and Windshield	48

MAINTENANCE

Vehicle Cleaning And Care	49
Environmental Concerns	49
Battery Disposal	49
Lifting The Vehicle	50
How To Lift The Rear Of The Vehicle Only	51
How To Lift The Front Of The Vehicle Only	51
Lowering The Vehicle	51
Wheels and Tires	52
Tire Repair	53
Wheel Installation	54
Light Bulb Replacement	55
Headlight	55
Tail Light and Brake Light	56
Transporting Vehicle (Towing)	57
Service and Maintenance	58
Routine Maintenance	59
Tire Inspection	59
Brakes	60
Rear Axle	60
Checking the Lubricant Level	60
Hardware	61
Lead Acid Battery Charging and Maintenance	62
Lead Acid Battery and Applications	63

Charging Cycle 63
Monthly Inspection 64
Electrolyte Level and Water 64
Over Filling Batteries 65
Water Purity Table 66
Battery Cleaning and Preparing Acid Solution 67
Battery Removal 68-69
Prolonged Storage and Battery Charging 70
Battery Charging 71
AC Voltage 72
Fault Diagnosis 72
Hydrometer 73
Using the Hydrometer 74
STAR Lithium Battery Line 75
- Powering Your Battery Up 75
- Lithium Maintenance 76
- Operating the Lithium Battery 76
- Lithium Battery Storage 77
- Lithium Battery Winter Storage 77
- Lithium Battery Warranty 77
- Extreme Temperature Usage 78
- Battery Prolonged Storage (Lead Acid/Lithium) 78
- STAR SMART Lithium App 78
- Lithium Battery Indicators 79

Periodic Service Schedule 80
Analysis and Elimination of Common Faults 82

APPENDIX A

Declaration of Conformity 84-85

FORWARD

Dear STAR EV® Product Owner,

Thank you for purchasing this vehicle. Before you drive the vehicle, read this Owner's Guide. This guide contains maintenance and operation information. The illustrations can show items that are optional for your vehicle.

You can do most of the service procedures in this guide with common, automotive hand tools. If necessary, contact your service representative for information about how to service the vehicle as shown in the Periodic Service Schedule. Repair or replacement parts are available from your STAR EV® Dealer.

When you contact STAR EV® about service or parts for your vehicle, the information below is needed.

Vehicle Model: _____

VIN or Serial Number: _____

OWNER'S GUIDE ELECTRIC POWERED VEHICLES - STARTING MODEL YEAR 2018

- The electric vehicle must be driven by qualified and responsible drivers
- Accelerator pedal and brake pedal should not be applied at the same time, otherwise it could damage the control system and motor.
- When the vehicle starts, the parking brake must be released. Otherwise, permanent damage may be caused to the braking system and other parts.
- Modification of vehicles is not allowed. Modification may affect vehicle performance, life, or even safety and may violate regulations. Vehicle damage caused by modification will not be covered by factory warranty.
- Unreasonable installation of electrical equipment on the vehicle, such as alarm devices, car phones, etc, may interfere with the vehicle's control system and affect vehicle performance. When installing such equipment, you should consult our company.
- Due to product improvements, the contents of this manual may be different than what you have. Contact dealer for updated information.
- Surpassing vehicle weight limits and overloading is strictly prohibited.

Read all of SAFETY and this section before attempting any procedure.
Pay particular attention to Notices, Cautions, Warnings and Dangers

GENERAL

For any questions about material in this manual, contact an authorized STAR EV® Dealer. Read and understand all labels on the vehicle. Always replace any damaged or missing labels.

Steep hills allow the vehicle to move at faster than normal speeds on a flat surface. To prevent the loss of vehicle control and possible injury, speeds must be controlled to the maximum level ground speed indicated in the GENERAL SPECIFICATIONS section. Apply the brake to control the speed.

If you operate the vehicle above the maximum specified speed, you can damage the drive train components. The damage caused by speeds more than the maximum specified can cause a loss of vehicle control, is abusive, and will not be covered under the warranty.

Under age drivers should not operate the vehicle without adult supervision.

Use caution when you tow the vehicle. Towing the vehicle above the recommended speed can cause personal injury or damage to the vehicle and other property.

If the vehicle is used in a commercial environment, signs must be in position to inform of possible conditions that could be dangerous. Examples are shown below.

Read all of SAFETY and this section before attempting any procedure.
Pay particular attention to Notices, Cautions, Warnings and Dangers

NOTICES, CAUTIONS, WARNINGS AND DANGERS

Read the **NOTICES, CAUTIONS, WARNINGS and DANGERS.** The person who services the vehicle needs the mechanical skill and experience to see possible hazardous conditions. Incorrect services or repairs can cause damage to the vehicle or make the vehicle dangerous to operate.

NOTICE

NOTICE indicates and describes information not related to personal injury.

⚠ CAUTION

CAUTION indicates a dangerous condition that can cause injury that is not life threatening.

⚠ WARNING

WARNING indicates a dangerous condition that can cause death or serious injury.

⚠ DANGER

DANGER indicates a dangerous condition that will cause death or serious injury

⚠ WARNING

Never modify the vehicle in any way that will alter the weight distribution of the vehicle, decrease its stability, increase the speed or extend the stopping distance beyond the factory specification

Such modifications can result in serious personal injury or death.

Read all of SAFETY and this section before attempting any procedure.
Pay particular attention to Notices, Cautions, Warnings and Dangers

GENERAL OPERATION

Read the following warnings before attempting to operate the vehicle:

⚠ WARNING

- When you leave the vehicle, turn the key to the **OFF** position and remove the key from the vehicle, set the parking brake.
- Drive the vehicle only as fast as terrain and conditions allow. Consider the terrain and traffic conditions. Consider environmental conditions that change the terrain and your ability to control the vehicle.
- DO NOT drive fast downhill. Sudden stops or change of direction can cause a loss of control.
- Use the brake to control the speed of the vehicle when you drive down a slope.
- When possible, stay in approved areas. **DO NOT** drive on steep slopes.
- Always keep feet, legs, hands and arms inside vehicle.
- DO NOT drive on rough terrain.
- Before you drive in the reverse direction, make sure the area behind the vehicle is clear.
- Make sure the direction selector is in the correct position before you press the accelerator pedal.
- Decrease speed before and during turns.
- Make sure you completely stop the vehicle before you move the direction selector.
- See **GENERAL SPECIFICATIONS** for the vehicle load and seat capacity.

Read all of SAFETY and this section before attempting any procedure.
Pay particular attention to Notices, Cautions, Warnings and Dangers

Read the following warnings before attempting to operate the vehicle:

NOTICE

Read the following text and warnings before you service the vehicle.

Normal use, wear or abuse can cause some components on the vehicle to fail. The manufacturer can't predict when and where the failure will occur.

A vehicle in need of repair does not function properly and can be dangerous. (Discontinue use until repaired) Be careful when you service the vehicle. Be aware of your safety and the safety of other people in the area.

Some components are heavy, spring loaded, corrosive, explosive, and can cause electrical shock or get hot. Battery acid and hydrogen gas can cause injury. DO NOT put your hands, face, feet or body in a location that can expose them to injury if an unexpected situation occurs.

Always use the correct tools shown in the tool list and wear safety equipment.

⚠ WARNING

Remove all jewelry before you service the vehicle.
Do not allow loose clothing or hair to contact the moving parts.

DO NOT TOUCH THE HOT OBJECTS.

(SUCH AS BRAKE PARTS OR THE CHARGER FINS)

Read all of SAFETY and this section before attempting any procedure.
Pay particular attentions to Notices, Cautions, Warnings and Dangers

When you maintain the vehicle, always wear eye protection. Be careful when you do work around batteries or you use solvents or compressed air.

ALWAYS REMEMBER TO:

- Use the vehicle in a responsible manner and keep the vehicle in safe condition for operation.
- Read and obey all warnings and operation instruction labels on the vehicle.
- Follow all safety rules in the area where the vehicle is operated.
- When there is a risk of lightning, leave the vehicle and look for a safe location to wait until the lightning has stopped.
- Drive the vehicle only as fast as terrain and conditions allow.
- Apply the brake to control speed on steep grades.
- Keep enough distance between vehicles.
- Decrease speed in wet areas.
- Be careful when you make sharp turns, or turns you are not familiar with.
- Be careful when you drive on loose terrain.

GENERAL MAINTENANCE

- Replace damaged or missing warning, caution or information labels.
- Service the vehicle according to the periodic service schedule in this manual.
- Make sure that approved and qualified personnel do all repairs.
- Follow the manufacturer's maintenance procedures.
- Use insulated tools within the battery area to prevent sparks or battery explosion.
- Use specified replacement parts. DO NOT use replacement parts of less quality.

Read all of SAFETY and this section before attempting any procedure.
Pay particular attentions to Notices, Cautions, Warnings and Dangers

GENERAL MAINTENANCE (CONTINUED)

- Keep complete records of the maintenance history of the vehicle.
- Use recommended tools.
- Make sure that tools and procedures not specified by the manufacturer will not be a safety risk to personnel or operation of the vehicle.
- Use wheel chocks and support vehicle with jack stands. NEVER get below a vehicle that is supported by a jack. Lift the vehicle according to the manufacturer instructions.
- Make sure you service the vehicle in an area away from open flame or sparks.
- Test drive the vehicle after any repairs or maintenance in a safe area that is free of both vehicular and pedestrian traffic.

Read all of SAFETY and this section before attempting any procedure.
Pay particular attentions to Notices, Cautions, Warnings and Dangers

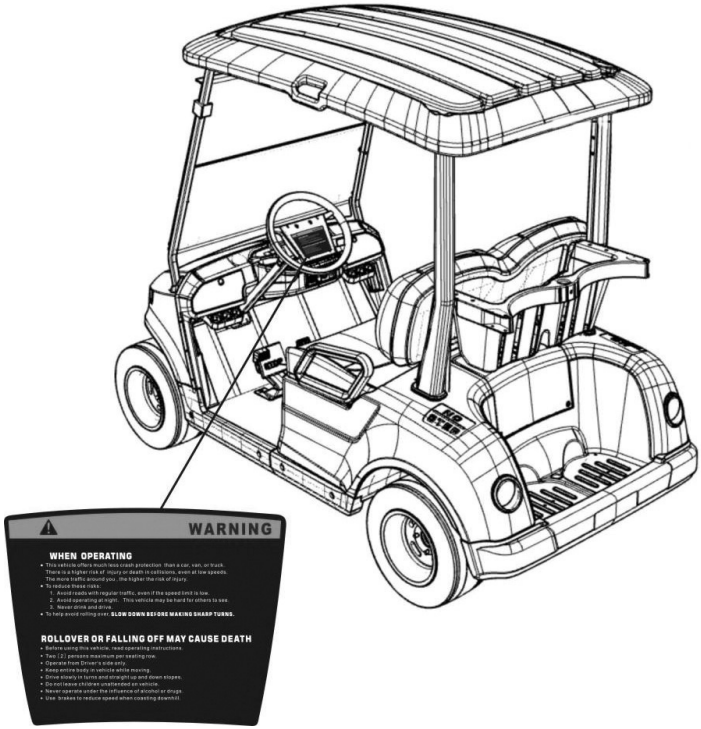

Read all of SAFETY and this section before attempting any procedure.
Pay particular attentions to Notices, Cautions, Warnings and Dangers

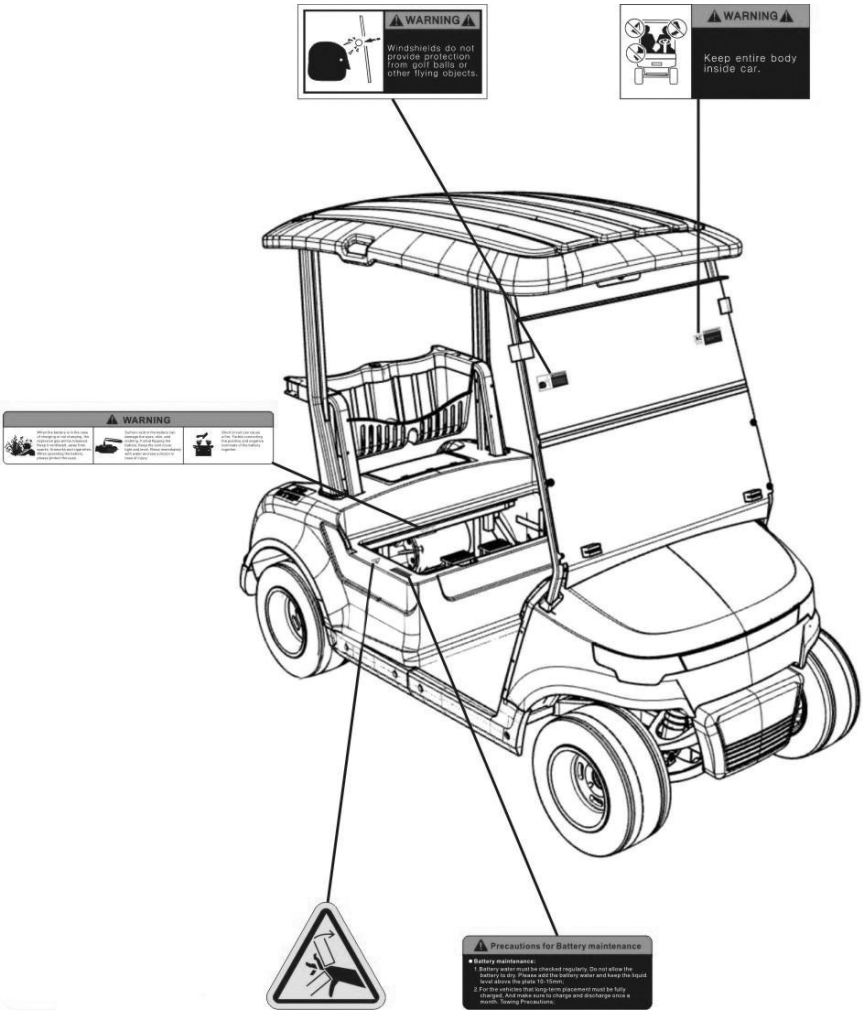

Read all of SAFETY and this section before attempting any procedure.
Pay particular attentions to Notices, Cautions, Warnings and Dangers

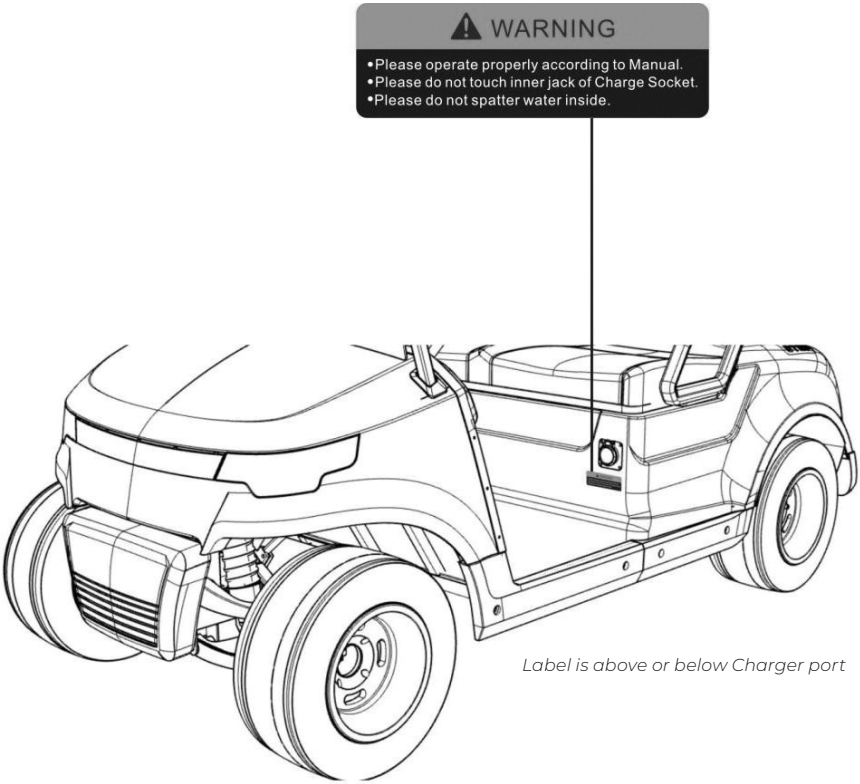

Label is above or below Charger port

Read all of SAFETY and this section before attempting any procedure.
Pay particular attentions to Notices, Cautions, Warnings and Dangers

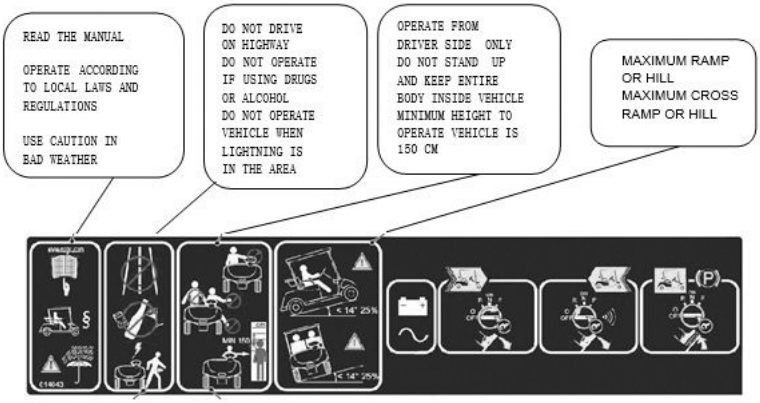

	FORWARD OPERATION	REVERSE OPERATION	NEUTRAL
ELECTRIC VEHICLES	* TURN KEY TO '⏻' * MOVE DIRECTION SELECTOR TO 'FWD' * PRESS ACCELERATOR PEDAL GENTLY	* TURN KEY TO '⏻' * MOVE DIRECTION SELECTOR TO 'REV' * PRESS ACCELERATOR PEDAL GENTLY	* TURN KEY TO '⊠' * MOVE DIRECTION SELECTOR TO 'NEUTRAL' * APPLY PARKING

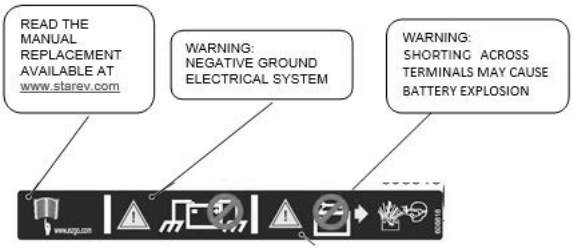

STAR®

VEHICLE STANDARD FEATURES
Four year limited warranty, two year bumper to bumper warranty (less wear items)
CP-2, CP2+2, CP 2+2 Lifted and CP4 **Motor:** 48 Volt AC, 4kW w/thermistor **Controller:** 350A AC Controller **Batteries:** 6, 8V Deep Cycle **STAR® Smart Lithium Batteries:** **CP-2** (80Ah, 105Ah, 160Ah, 210Ah) **CP 2+2** (80Ah, 105Ah, 160Ah, 210Ah) **CP 2+2 Lifted & CP4** (105Ah, 160Ah, 210Ah)
CP4+2, CP4+2 Lifted, CP-6, CP 6+2 **Motor:** 5kW QDS™ AC Motor **Controller:** 450A AC Controller **Batteries:** 8, 6 Volt Deep Cycle **STAR® Smart Lithium Batteries:** **CP4+2** (105Ah, 160Ah, 210Ah) **CP4+2 Lilfted, CP-6, & CP 6+2** (160Ah, 210Ah)
Charger: On-Board 48V / 18A Charge
Drive Train: Motor Shaft Direct Drive
Brakes: Rear wheel mechanical drum brake (2, 2+2, and 2+2 Lifted) 4 Wheel hydraulic (4, 4+2, 6, and 6+2)
QDS™ Drive System with over temperature protection
Front independent suspension
10” DOT Radial Tire and Machined Black Honeycomb Rim
Digital Display
Emergency Flashers
Turn Signals
High/Low Beams
LED Tail lights
Daytime Running Lights
USB Port
VEHICLE OPTIONS AND UPGRADES
LSV Package
Bluetooth speakers
Third Brake Light
Battery filling system

CAPELLA 2

CAPELLA 2+2

CAPELLA 2+2 LIFTED

CAPELLA 4

CAPELLA 4+2

CAPELLA 4+2 LIFTED

CAPELLA 6

CAPELLA 6+2

STAR®

	CAPELLA 2	CAPELLA 2+2	CAPELLA 2+2 LIFTED
DIMENSIONS			
Overall Dimensions	95" L x 48.625" W x 74" H (241 cm x 124 cm x 188 cm)	124" L x 48.625" W x 79.25" H (315 cm x 124 cm x 201 cm)	124"L x 51" W x 82.5" H (315cm x 130 cm x 210 cm)
Wheel Base	65.7" (167 cm)	65.7" (167 cm)	65.7" (167cm)
Front Wheel Base	36.7" (93 cm)	36.7" (93 cm)	40.5" (103 cm)
Rear Wheel Base	39.25" (100 cm)	39.25" (100cm)	40.5" (103cm)
Ground Clearance	4.8" (12 cm)	4.8" (12 cm)	6.7" (17 cm)
BODY & CHASSIS			
Frame	Welded structural steel, powder coated	Welded structural steel, powder coated	Welded structural steel, powder coated
Body Material	Injection molded plastic with automative paint and finish	Injection molded plastic with automative paint and finish	Injection molded plastic with automative paint and finish
Roof	Plastic, extended, color-matched	Plastic, extended, color-matched	Plastic, extended, color-matched
POWER			
Motor	48 Volt AC, 4kW w/thermistor	48 Volt AC, 4kW w/thermistor	48 Volt AC, 4kW w/thermistor
Batteries	6, 8-Volt deep cycle	6, 8-Volt deep cycle	6, 8-Volt deep cycle
Lithium Batteries	80Ah	80Ah, 105Ah, 160Ah, 210Ah	105Ah, 160Ah, 210Ah
Speed Controller	350A AC Controller	350A AC Controller	350A AC Controller
Drive Train	Direct Drive with limited slip differential	Direct Drive with limited slip differential	Direct Drive with limited slip differential
PERFORMANCE			
Passengers	2	4	4
Curb Weight	1105 lbs (501 kg) w/ 6 x T875 Trojan Batteries	1233 lbs (559 kg) w/ 6 x T875 Trojan Batteries	1373 lbs (623 kg) w/ 6 x T875 Trojan Batteries
Load Capacity	800 lbs (362 kg)	800 lbs (362 kg)	800 lbs (362 kg)
Turning Radius	10.17 ft (3.1 m)	10.17 ft (3.1 m)	10.17 ft (3.1 m)
Maximum Speed	19.5 mph (25 mph if LSV)	19.5 mph (25 mph if LSV)	19.5 mph (25 mph if LSV)
STEERING AND SUSPENSION			
Tires and Rims	10" tires with Aluminum Alloy Rim	10" tires with Aluminum Alloy Rim	12" tires with Aluminum Alloy Rim
Steering System	Rack and pinion double output, self-compensated	Rack and pinion double output, self-compensated	Rack and pinion double output, self-compensated
Front Suspension	Double swing arm independent coil over shock	Double swing arm independent coil over shock	Double swing arm independent coil over shock
Rear Suspension	Longitudinal leaf spring + shock absorption	Longitudinal leaf spring + shock absorption	Longitudinal leaf spring + shock absorption
Service Brake	Mechanical braking, rear drum	Mechanical braking, rear drum	Mechanical braking, rear drum
Parking Brake	Mechanical foot parking	Mechanical foot parking	Mechanical foot parking

Specifications are subject to change without notification.

STAR®

	CAPELLA 4	CAPELLA 4+2	CAPELLA 4+2 LIFTED
DIMENSIONS			
Overall Dimensions	124.75" L x 48.625" W x 76" H (317 cm x 124 cm x 193 cm)	152" L x 48.625" W x 77" H (386 cm x 124 cm x 196 cm)	152" L x 52" W x 82.5" H (383 cm x 132 cm x 210 cm)
Wheel Base	95.3" (242 cm)	95.3" (242 cm)	95.3" (242 cm)
Front Wheel Base	36.7" (93 cm)	36.7" (93 cm)	40.5" (103 cm)
Rear Wheel Base	39.25" (100cm)	39.25" (100 cm)	40.5" (103 cm)
Ground Clearance	4.8" (12 cm)	4.8" (12 cm)	6.7" (17 cm)
BODY & CHASSIS			
Frame	Welded structural steel, powder coated	Welded structural steel, powder coated	Welded structural steel, powder coated
Body Material	Injection molded plastic with automative paint and finish	Injection molded plastic with automative paint and finish	Injection molded plastic with automative paint and finish
Roof	Plastic, extended, color-matched	Plastic, extended, color-matched	Plastic, extended, color-matched
POWER			
Motor	5kW QDS™ AC Motor	5kW QDS™ AC Motor	5kW QDS™ AC Motor
Batteries	8, 6-Volt Deep Cycle	8, 6-Volt Deep Cycle	8, 6-Volt Deep Cycle
Lithium Batteries	105Ah, 160Ah, 210Ah	160Ah, 210Ah	160Ah, 210Ah
Speed Controller	450A AC Controller	450A AC Controller	450A AC Controller
Drive Train	Direct Drive with limited slip differential	Direct Drive with limited slip differential	Direct Drive with limited slip differential
PERFORMANCE			
Passengers	4	6	6
Curb Weight	1474 lbs (669 kg) w/8 x T105 Trojan batteries	1602 lbs (727 kg) w/8 x T105 Trojan batteries	1691 lbs (767 kg) w/8 x T105 Trojan batteries
Load Capacity	800 lbs (363 kg)	1156 lbs (524 kg)	1156 lbs (524 kg)
Turning Radius	16.4 ft (5 m)	16.4 ft (5 m)	16.4 ft (5 m)
Maximum Speed	19.5 mph (25 mph if LSV)	19.5 mph (25 mph if LSV)	19.5 mph (25 mph if LSV)
STEERING AND SUSPENSION			
Tires and Rims	10" tires with Aluminum Alloy Rim	10" tires with Aluminum Alloy Rim	12" tires with Aluminum Alloy Rim
Steering System	Rack and pinion double output, self-compensated	Rack and pinion double output, self-compensated	Rack and pinion double output, self-compensated
Front Suspension	Double swing arm independent coil over shock	Double swing arm independent coil over shock	Double swing arm independent coil over shock
Rear Suspension	Longitudinal leaf spring + shock absorption	Longitudinal leaf spring + shock absorption	Longitudinal leaf spring + shock absorption
Service Brake	4-wheel hydraulic brake	4-wheel hydraulic brake	4-wheel hydraulic brake
Parking Brake	Mechanical hand operated	Mechanical hand operated	Mechanical hand operated

Specifications are subject to change without notification.

STAR®

	CAPELLA 6	CAPELLA 6+2
DIMENSIONS		
Overall Dimensions	152" L x 47.6" W x 73.4" H (386 cm x 121 cm x 186 cm	168"L x 47.6"W x 73.4"H (426 cm x 121 cm x 186 cm)
Wheel Base	124" (315 cm)	124" (315 cm)
Front Wheel Base	36.7" (93 cm)	36.7" (93 cm)
Rear Wheel Base	38.6" (98 cm)	38.6" (98 cm)
Ground Clearance	4.8" (12 cm)	4.8" (12 cm)
BODY & CHASSIS		
Frame	Welded structural steel, powder coated	Welded structural steel, powder coated
Body Material	Injection molded plastic with automative paint and finish	Injection molded plastic with automative paint and finish
Roof	Plastic, extended, color-matched	Plastic, extended, color-matched
POWER		
Motor	5kW QDS™ AC Motor	5kW QDS™ AC Motor
Batteries	8, 6 Volt Deep Cycle	8, 6 Volt Deep Cycle
Lithium Batteries	160Ah, 210Ah	160Ah, 210Ah
Speed Controller	450A AC Controller	450A AC Controller
Drive Train	Direct Drive with limited slip differential	Direct Drive with limited slip differential
PERFORMANCE		
Passengers	6	8
Curb Weight	1556 lbs (705 kg)	1556 lbs (705 kg)
Load Capacity	1422 lbs (645 kg)	1422 lbs (645 kg)
Turning Radius	19.7 ft (6 m)	19.7 ft (6 m)
Maximum Speed	19.5 mph (25 mph if LSV)	19.5 mph (25 mph if LSV)
STEERING AND SUSPENSION		
Tires and Rims	12" tires with Aluminum Alloy Rim	12" tires with Aluminum Alloy Rim
Steering System	Rack and pinion double output, self-compensated	Rack and pinion double output, self-compensated
Front Suspension	Double swing arm independent coil over shock	Double swing arm independent coil over shock
Rear Suspension	Longitudinal leaf spring + shock absorption	Longitudinal leaf spring + shock absorption
Service Brake	4-wheel hydraulic brake	4-wheel hydraulic brake
Parking Brake	Mechanical hand operated	Mechanical hand operated

Specifications are subject to change without notification.

Read all of SAFETY and this section before attempting any procedure.
Pay particular attentions to Notices, Cautions, Warnings and Dangers

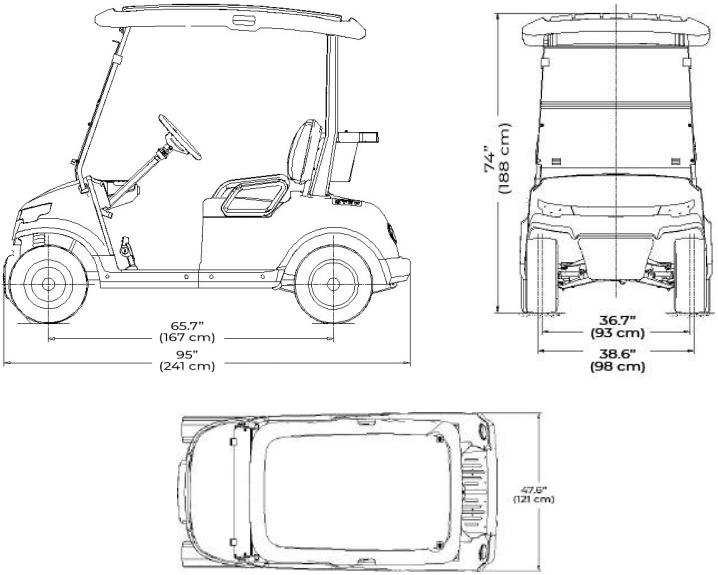

Figure 1 - CP 2 Vehicle Dimensions

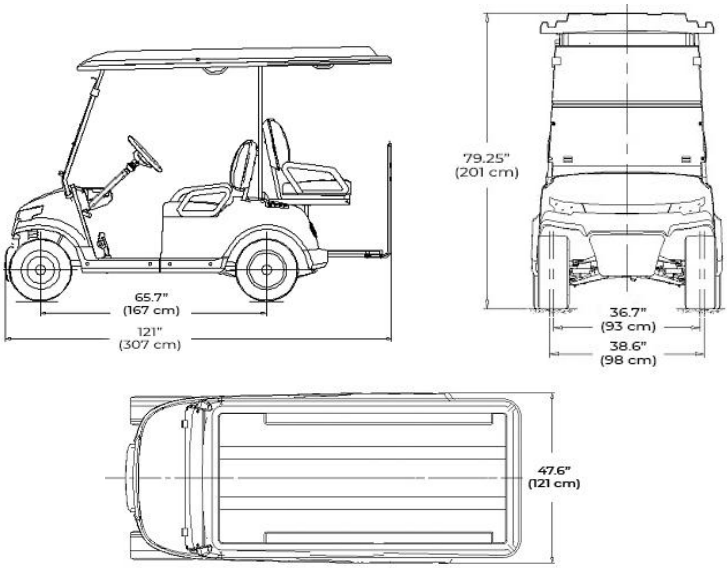

Figure 2 - CP 2+2 Vehicle Dimensions

Read all of SAFETY and this section before attempting any procedure.
Pay particular attentions to Notices, Cautions, Warnings and Dangers

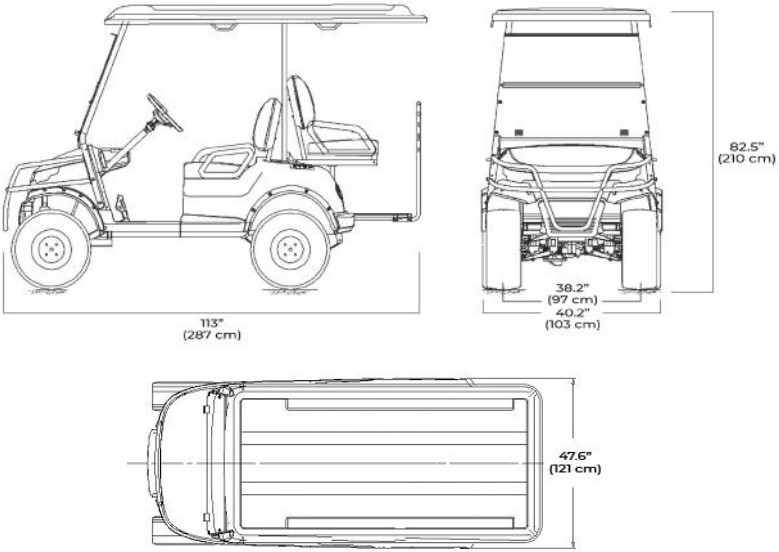

Figure 3 - Capella 2+2 Lifted Vehicle Dimensions

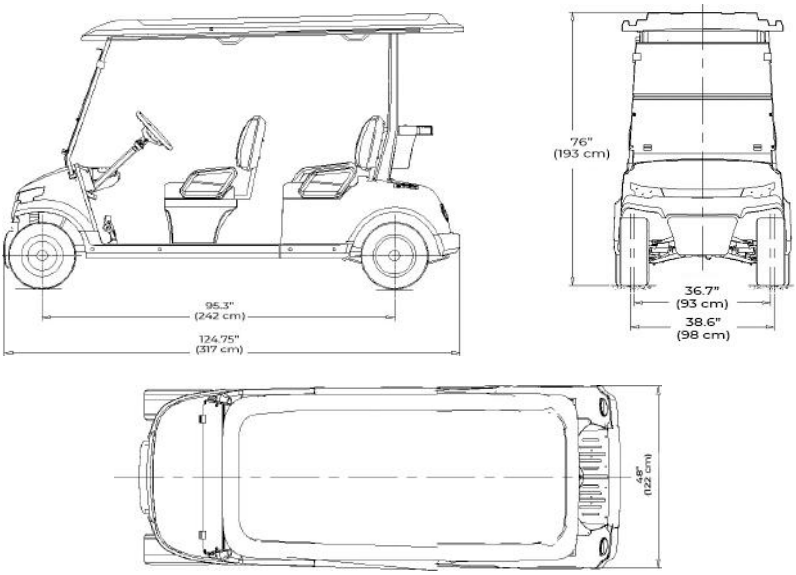

Figure 4 - CP 4 Vehicle Dimensions

Read all of SAFETY and this section before attempting any procedure.
Pay particular attentions to Notices, Cautions, Warnings and Dangers

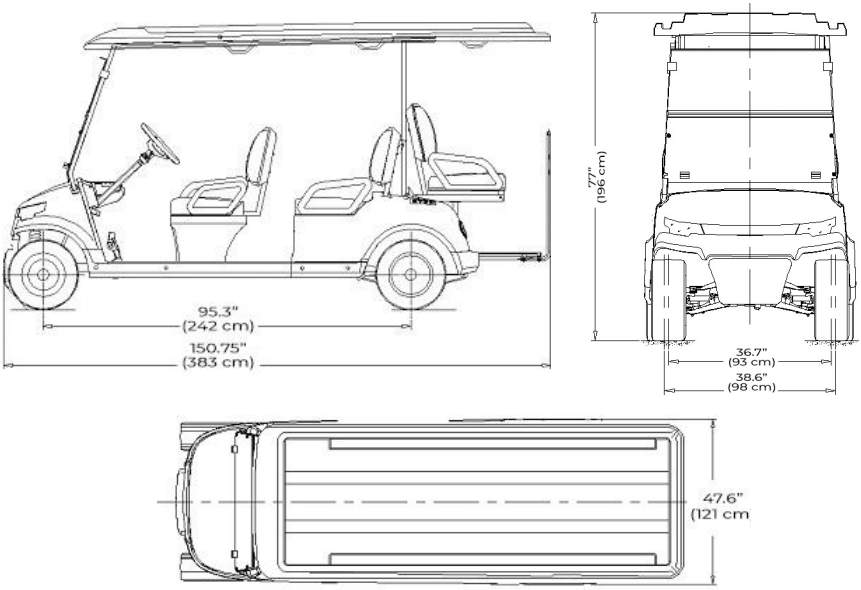

Figure 5 - CP 4+2 Vehicle Dimensions

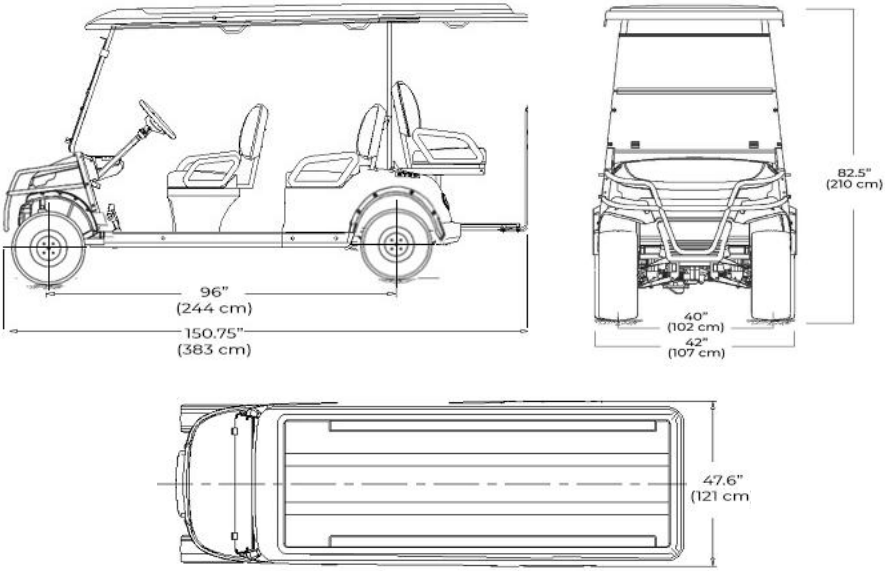

Figure 6 - CP 4+2 Lifted Vehicle Dimensions

Read all of SAFETY and this section before attempting any procedure.
Pay particular attentions to Notices, Cautions, Warnings and Dangers

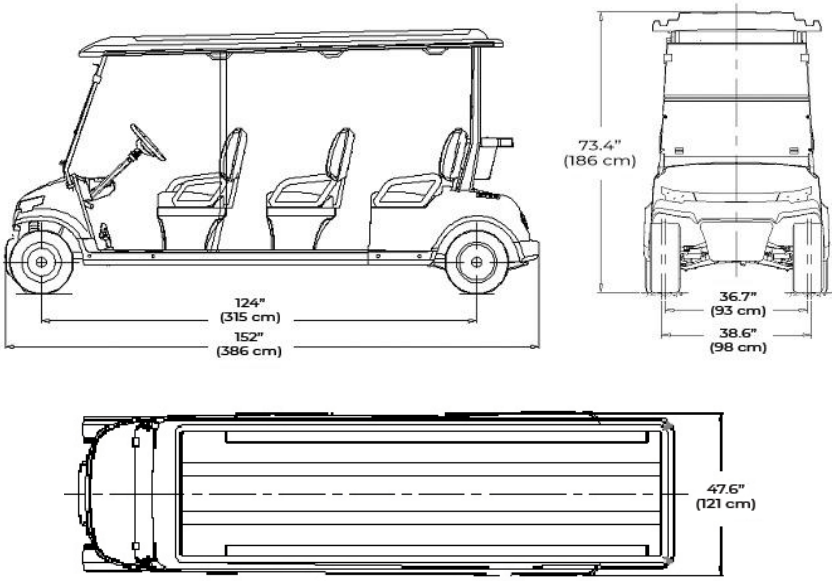

Figure 7 - CP 6 Vehicle Dimensions

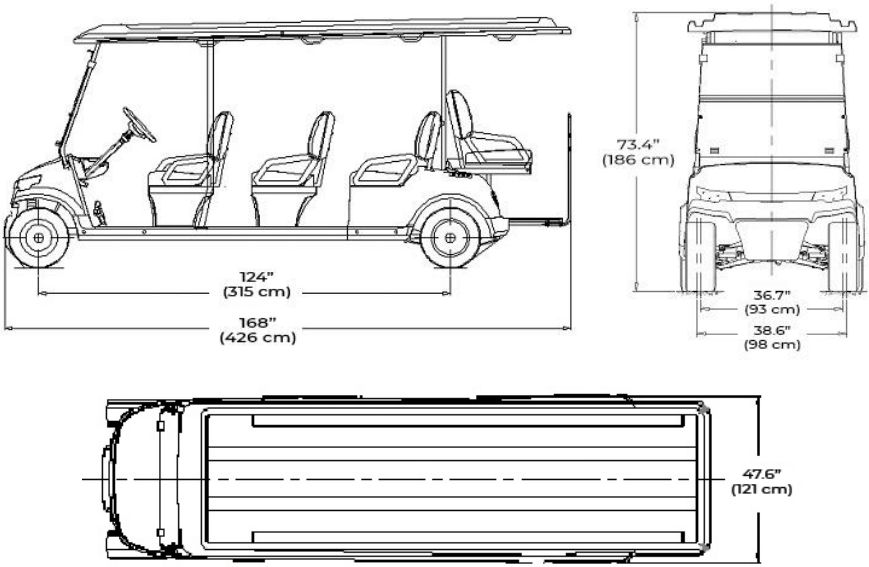

Figure 8 - CP 6+2 Vehicle Dimensions

Read all of SAFETY and this section before attempting any procedure.
Pay particular attentions to Notices, Cautions, Warnings and Dangers

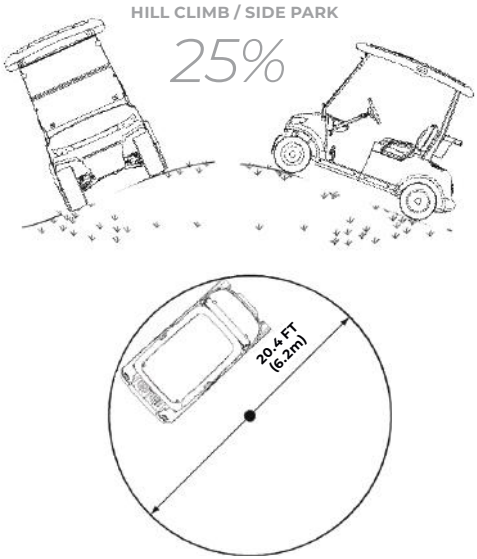

Figure 8 - Vehicle Incline Specifications and Turning Diameter (2 and 2+2)

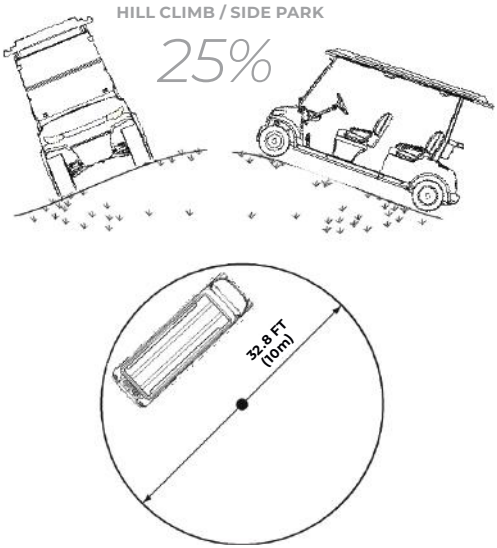

Figure 9 - Vehicle Incline Specifications and Turning Diameter (4 and 4+2)

Read all of SAFETY and this section before attempting any procedure.
Pay particular attentions to Notices, Cautions, Warnings and Dangers

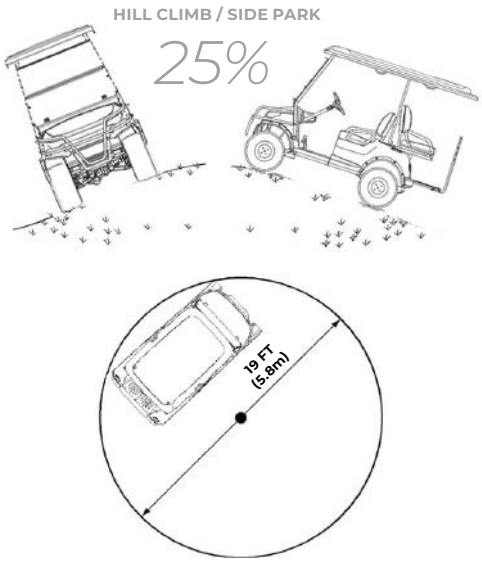

Figure 9 - Vehicle Incline Specifications and Turning Diameter (2+2 Lifted)

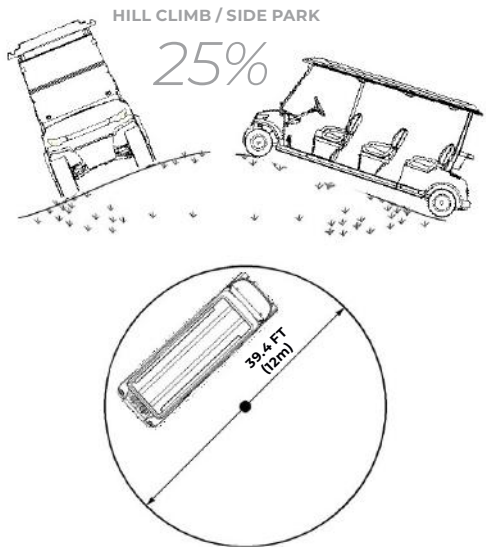

Figure 10 - Vehicle Incline Specifications and Turning Diameter (6 and 6+2)

STAR®

VEHICLE STANDARD FEATURES
Four year limited warranty, two year bumper to bumper warranty (less wear items)
CP 2H Lifted **Motor:** 48 Volt AC, 4kW w/thermistor **Controller:** 350A AC Controller **Batteries:** 6, 8V Deep Cycle **CP 2HCX Lifted** **Motor:** 48 Volt AC, 5kW w/thermistor **Controller:** 450A AC Controller **Batteries:** 6, 8V Deep Cycle **CP 4H Lifted** **Motor:** 48 Volt AC, 5kW w/thermistor **Controller:** 450A AC Controller **Batteries:** 6, 8V Deep Cycle **STAR® Smart Lithium Batteries:** **CP-2H Lifted** (105Ah, 160Ah, 210Ah) **CP-2HCX Lifted** (160Ah, 210Ah) **CP-4H Lifted** (160Ah, 210Ah)
Charger: On-Board 48V / 18A Charge
Drive Train: Direct Drive with limited slip differential
Brakes: Mechanical braking, rear drum
QDS™ Drive System with over temperature protection
Front independent suspension
12" tires with Aluminum Alloy Rim
Digital Display
Emergency Flashers
Turn Signals
High/Low Beams
LED Tail lights
Daytime Running Lights
USB Port
VEHICLE OPTIONS AND UPGRADES
LSV Package
Bluetooth speakers
Third Brake Light
Battery filling system

CAPELLA 2H LIFTED

CAPELLA 2HCX LIFTED

CAPELLA 4H LIFTED

STAR®

	CAPELL 2H LIFTED	CAPELLA 2HCX LIFTED	CAPELLA 4H LIFTED
DIMENSIONS			
Overall Dimensions	116" x 51" x 81" (294 x 129 x 205 cm)	138" x 51" x 79" (350 x 129 x 200 cm)	146" x 51" x 79" (370 x 129 x 200cm)
Wheel Base	65.7" (167cm)	98" (248 cm)	98" (248 cm)
Ground Clearance	6.7" (17 cm)	6.7" (17 cm)	6.7" (17 cm)
BODY & CHASSIS			
Frame	Welded structural steel, powder coated	Welded structural steel, powder coated	Welded structural steel, powder coated
Body Material	Injection molded plastic with automative paint and finish	Injection molded plastic with automative paint and finish	Injection molded plastic with automative paint and finish
Roof	Blister, no painting finish	Plastic, painting finish	Blister, no paint finish
POWER			
Motor	48 Volt AC, 4kW w/thermistor	48 Volt AC, 5kW w/thermistor	48 Volt AC, 5kW w/thermistor
Batteries	6, 8-Volt deep cycle	6, 8-Volt deep cycle	8, 6-Volt Deep Cycle
Lithium Batteries	105Ah, 160Ah, 210Ah	160Ah, 210Ah	160Ah, 210Ah
Speed Controller	350A AC Controller	450A AC Controller	450A AC Controller
Drive Train	Direct Drive with limited slip differential	Direct Drive with limited slip differential	Direct Drive with limited slip differential
PERFORMANCE			
Passengers	2	2	4
Curb Weight	1105 lbs (501 kg) w/ 6 x T875 Trojan Batteries	1373 lbs (623 kg) w/ 6 x T875 Trojan Batteries	1691 lbs (767 kg) w/8 x T105 Trojan batteries
Load Capacity	800 lbs (362 kg)	1156 lbs (524 kg)	1156 lbs (524 kg)
Turning Radius	10.17 ft (3.1 m)	16.4 ft (5 m)	16.4 ft (5 m)
Maximum Speed	19.5 mph (25 mph if LSV)	19.5 mph (25 mph if LSV)	19.5 mph (25 mph if LSV)
STEERING AND SUSPENSION			
Tires and Rims	12" tires with Aluminum Alloy Rim	12" tires with Aluminum Alloy Rim	12" tires with Aluminum Alloy Rim
Steering System	Rack and pinion double output, self-compensated	Rack and pinion double output, self-compensated	Rack and pinion double output, self-compensated
Front Suspension	Double swing arm independent coil over shock	Double swing arm independent coil over shock	Double swing arm independent coil over shock
Rear Suspension	Longitudinal leaf spring + shock absorption	Longitudinal leaf spring + shock absorption	Longitudinal leaf spring + shock absorption
Service Brake	Mechanical braking, rear drum	4 wheel hydraulic braking	4 wheel hydraulic braking
Parking Brake	Mechanical parking	Mechanical hand parking	Mechanical hand parking

Specifications are subject to change without notification.

Read all of SAFETY and this section before attempting any procedure.
Pay particular attentions to Notices, Cautions, Warnings and Dangers

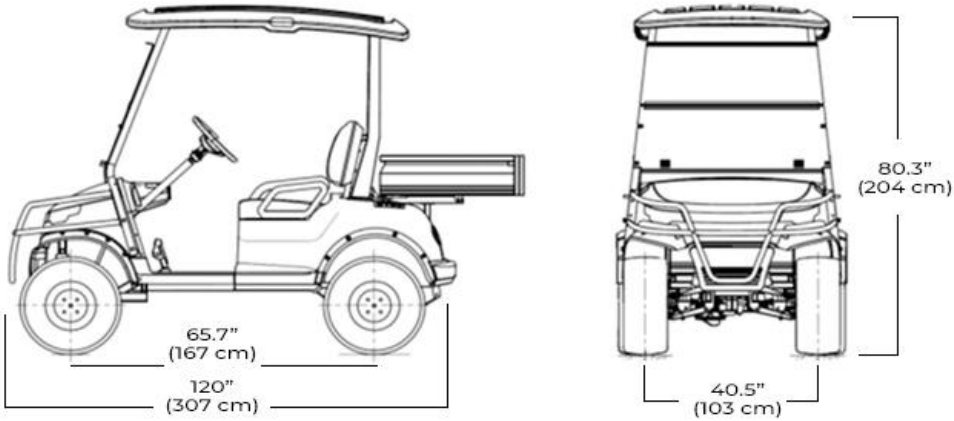

Figure 9 - CP 2H Lifted Vehicle Dimensions

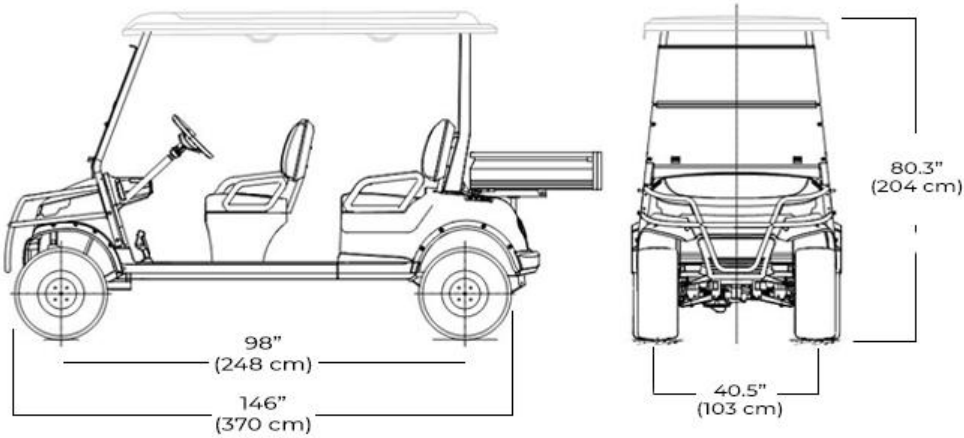

Figure 11 - CP 4H Lifted Vehicle Dimensions

Read all of SAFETY and this section before attempting any procedure.
Pay particular attentions to Notices, Cautions, Warnings and Dangers

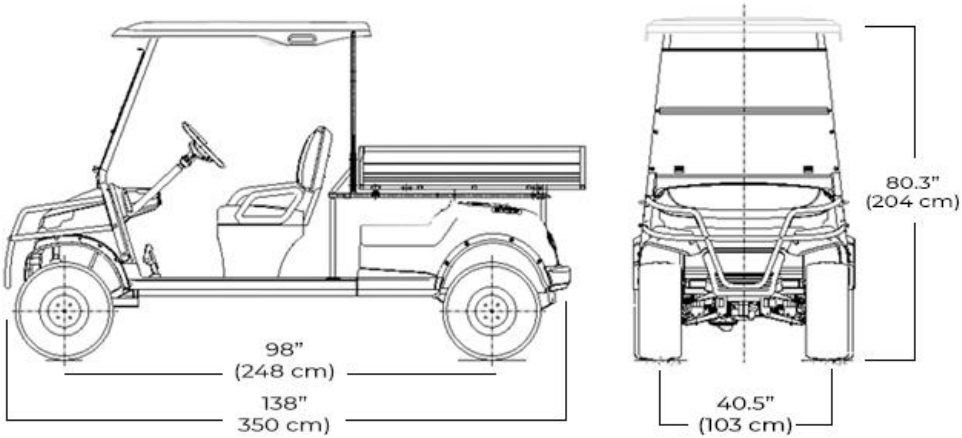

Figure 10 - CP 2HCX Lifted Vehicle Dimensions

Read all of SAFETY and this section before attempting any procedure.
Pay particular attentions to Notices, Cautions, Warnings and Dangers

INTRODUCTION TO CONTROLS AND INDICATORS

1. Electricity meter
2. Forward and reverse switch
3. Head light switch
4. Emergency flash switch *(if equipped)*
5. Key switch
6. Turn signal switch
7. Horn button *(if equipped)*
8. Parking pedal
9. Brake pedal
10. Accelerator pedal
11. LCD instrument *(if equipped)*
12. Charging port

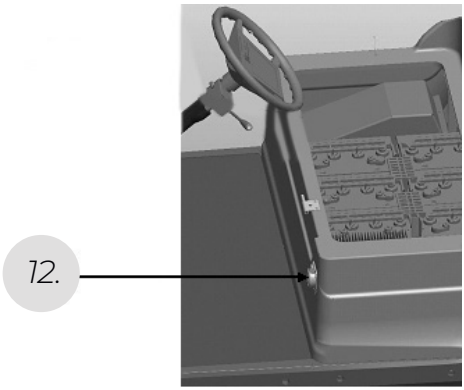

(Figure 10 - Controls and Indicators)

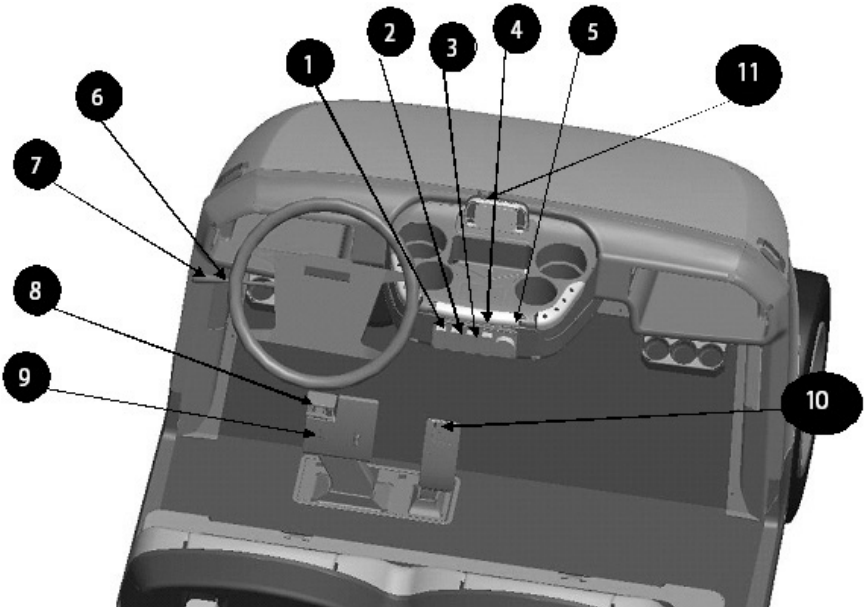

Figure 10 - Controls and Indicators

Read all of SAFETY and this section before attempting any procedure.
Pay particular attentions to Notices, Cautions, Warnings and Dangers

FEATURES

NOTICE

If the vehicle has accessories that were installed at the factory, some accessories may continue to operate with the key switch in the **OFF** position.

KEY SWITCH AND DIRECTION SELECTOR

⚠ WARNING

To decrease the risk of component damage, stop the vehicle before you move the key switch or the direction selector.

To prevent the loss of control, do not move the direction selector while the vehicle is in motion. If you move the selector, the vehicle speed will immediately decrease and a warning device activates.

The key Switch and Direction Selector is located on the dash panel. The key switch or direction selector enables the electrical system of the vehicle to be turned **ON** or **OFF** by turning the key. It also functions as the direction selector and allows the operator to select **F (forward) or R (reverse).**

When the direction selector is moved to the R position, the reverse warning buzzer activates.

When the vehicle is without an operator, the key switch must be turned to the **OFF** position, the key must be removed and the parking brake applied to prevent accidental movement of the vehicle.

Read all of SAFETY and this section before attempting any procedure.
Pay particular attentions to Notices, Cautions, Warnings and Dangers

POWER METER *(if equipped)*

- The power meter is on the dashboard.
- The power meter identifies the remaining battery power in the battery pack, from top to bottom, the battery capacity is getting less and less.
- If Lithium is used, the meter is on front of dash.

ACCELERATOR AND BRAKE PEDAL

⚠ WARNING

Accidental movement of the accelerator pedal can cause the vehicle to move suddenly and cause severe injury or death. When the key is in the position of forward and reverse switch is in the position of FWD or REV, and when you press the accelerator pedal **(10)** *Figure 10 - Controls and Indicators* the motor starts and the vehicle will move in the direction indicated by the forward and reverse switches. To stop the vehicle quickly, press the brake pedal **(9)**

Figure 10 - Controls and Indicators

Read all of SAFETY and this section before attempting any procedure.
Pay particular attentions to Notices, Cautions, Warnings and Dangers

PARKING PEDAL

The vehicle is equipped with mechanical parking brakes **(2)** *(Figure 11-Parking Pedal)* and the parking pedal has two clicks. When the vehicle stops, please step on the parking pedal to the second gear. At the same time, turn the key switch to ⊗ and remove the key before leaving. When starting the vehicle, please turn the key switch to ↻ and step on the acceleration pedal *(4)* *(Figure 11 - Parking Pedal)* The parking pedal *(2)* *(Figure 11 - Parking Pedal)* and brake pedal *(3)* *(Figure 11 - Parking Pedal)* pop up automatically, and then press forward and backward switch to FWD or REV, the vehicle can run in the selected direction.

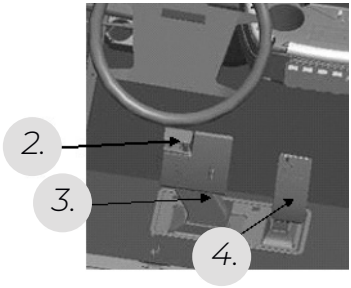

Figure 11 - Parking Pedal

⚠ DANGER

Before trying to move the vehicle by pulling/pushing or starting a vehicle, please ensure that the parking pedal is released, otherwise the brake system, control system, and motor will be damaged.

When the parking pedal stops on the level road or ramp, please step on the parking pedal to the 2nd click to ensure the parking function of the vehicle is engaged, otherwise the vehicle will move and endanger the safety of passengers' lives and/or property. Your parking brake is intended to be used on inclines that your vehicle is rated for. Exceeding this incline limit with the brake mechanism can lead to brake failure and can endanger the safety of passengers' lives and or property. Regardless of slope, the parking pedal must be engaged; the 2nd click must be heard. STAR EV® will not bear any responsibility for any damage in the event of an accident.

Read all of SAFETY and this section before attempting any procedure.
Pay particular attentions to Notices, Cautions, Warnings and Dangers

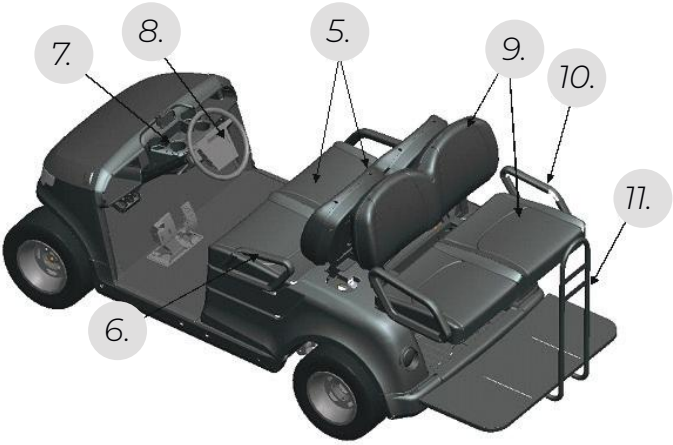

Figure 12 - Rear Seating

FRONT SEAT

- The front seat (5) is for two people, one person on each side of the seat. *(Figure 12 - Rear Seating)*

FRONT HIP RESTRAINT

- The front hip restraints (6) help people stay in position while the vehicle is in motion. *(Figure 12 - Rear Seating)*

CUP HOLDER

- The vehicle has a cup holder (7) for the benefit of both the driver and passenger. *(Figure 12 - Rear Seating)*

STEERING WHEEL

- The steering wheel (8) controls the direction of vehicle travel. *(Figure 12 - Rear Seating)*

REAR SEAT AND CARGO PLATFORM *(if equipped)*

- The seat flips down to hold and carry cargo. *(Figure 12 - Rear Seating)*
  Rear passengers must stay in the seat and hold both the hand rail and rear handle while the vehicle is in motion. Do not allow passengers to ride on the cargo platform. A sudden move or stop can cause severe injury or death to passengers on the cargo platform. The vehicle has a feature that functions as a rear seat or a cargo platform. When in the upright position, it is a rear seat for two passengers. Fold the seat flat for a cargo platform. *(9). (Figure 12 - Rear Seating)*

Read all of SAFETY and this section before attempting any procedure.
Pay particular attentions to Notices, Cautions, Warnings and Dangers

REAR HAND RAILS

There are rear hand rails *(10)*, one on each side of the rear seat to help passengers stay in position when the vehicle is in motion. The passengers must hold the rear hand rail *(10)* whenever the vehicle is in motion. *(Figure 12 - Rear Seating)*

REAR HANDLE

The rear handle *(11)* is located at the far end of the vehicle in the center of the foot-rest. The handle helps the passengers stay in position when the vehicle is in motion. The passengers must hold the rear handle (11) when the vehicle is in motion. *(Figure 12 - Rear Seating)*

CHARGER RECEPTACLE

- Connect the charger cord to this charger receptacle *(12)* to charge the batteries *(Figure 13 - Charger Receptacle)*
- The charger can stay connected to the AC outlet after the charge cycle is complete. To charge the vehicle, refer to the instruction labels on the charger. Completely connect the DC plug into the vehicle receptacle. The charger will automatically start seconds after the plug is in position. The charger will automatically stop when the batteries are charged. Remove the charger cord before you operate the vehicle.

(Figure 13 - Charger Receptacle)

REAR VIEW MIRROR *(if equipped)*

- The rear view mirror is adjustable for use during the day or night.

BATTERY COMPARTMENT

- Lift the front seat to access the battery compartment for maintenance of the battery.

Read all of SAFETY and this section before attempting any procedure.
Pay particular attentions to Notices, Cautions, Warnings and Dangers

SERIAL NUMBER LOCATION

The serial number and manufacture date code is on the plate of the vehicle in the glove box. Two chassis numbers are also located on the chassis frames.

Design changes occur on a continuous basis. To get the correct components for the vehicle, the manufacture date code, serial number or vehicle model, must be supplied.

Figure 14 - Chassis Serial Number Location

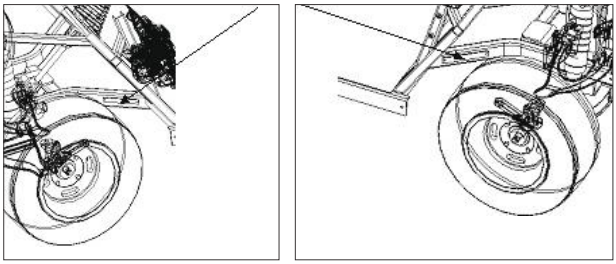

Chassis Serial number location on the front right beam of frame

Figure 15 - Glove Box Serial Number Location

Read all of SAFETY and this section before attempting any procedure.
Pay particular attentions to Notices, Cautions, Warnings and Dangers

BEFORE INITIAL USE

Read, understand and follow the safety label on the steering wheel. Make sure you understand how to safely operate the vehicle and its equipment.

⚠ WARNING

Reckless use of this vehicle can cause severe injury or death. This vehicle is a light-duty vehicle, NOT an All Terrain Vehicle (ATV). Do not engage in rough or reckless operation of this vehicle. If you do not know the terrain, make sure you prepare for unexpected occurrences.

Explosive hydrogen gas is created during the charge cycle of lead acid batteries. Do not charge these batteries without enough ventilation. A 4% concentration of hydrogen gas is explosive. To prevent battery explosion, keep all flammable materials, open flame or sparks away from the batteries.

Explosive hydrogen gas is created during the charge cycle of lead acid batteries. Good ventilation is necessary to remove gas from enclosed spaces. The air must change every 12 minutes. Never charge a battery near flammable materials, open flame or sparks. Before a new vehicle is put into operation, complete the items shown in the INITIAL SERVICE CHART

INITIAL SERVICE CHART	
ITEM	SERVICE OPERATION
Batteries	Charge batteries
Seats	Remove protective plastic covering
	Check operation of brakes, lights and seat belts
	Calculate the distance necessary to stop the vehicle for the brake performance test
Tires	Check air pressure
General	Check for possible leaks

INTEGRATED DIGITAL TOUCHSCREEN DASHBOARD

CAPELLA's new digital dashboard display provides easy, at-a-glance reports on all systems, components and conditions that may potentially affect your driving experience. Informed by proven CAN bus automotive technology, CAPELLA's upgraded, integrated dashboard display keeps vital operating details up to the minute, in plain sight and at your fingertips.

The CAPELLA digital dashboard communicates clearly, colorfully and intuitively, using bright illuminated colors, recognizable icons, and dynamic infographics that allow you to monitor virtually all vehicle functions – in detail and in real time, including:

FUNCTION	UNITS / STANDARD	UNITS / METRIC
Speed	MPH	KM/H
Digital clock	AM/PM	AM/PM
Exterior temperature	°F	°C
Engine speed	RPM	RPM
Battery charge	% remaining	% remaining
Power output	kW	kW
Odometer	Miles	km
Trip distance	Miles	km

These synchronized digital data streams not only allow you to continuously monitor electronic functions and performance levels, they also issue status alerts and service notifications and help streamline troubleshooting, diagnosis and repairs.

Lighted icons allow touchscreen control of the dashboard's screen brightness and headlight beam adjustment, while indicator lights signify left-and-right turn signal operation, headlight function, parking brake engagement, and engine alerts:

ICONS	MEANING	FUNCTION
	Turn Signal	Left / Right
	Screen Brightness	High / Low
	Headlights	High / Low Beam
	Parking Brake*	Engagement
	Check Engine	Alert Code(s)

* Available in 4-passenger models only

For models equipped with the optional backup camera, the entire dashboard displays the backup camera view any time the vehicle is in reverse gear to provide optimum pedestrian safety and vehicle navigation.

MENU SETTINGS

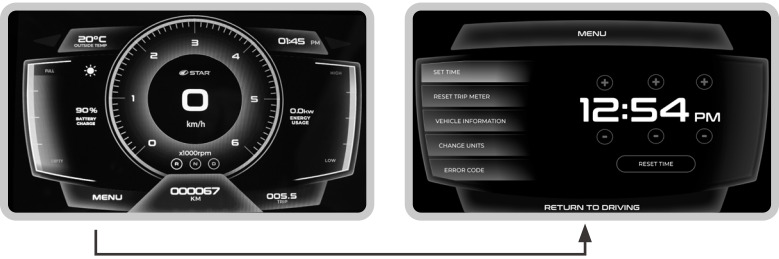

MENU

Touch the menu bar to display additional control screens and actions.

The initial menu screen displays the reports and actions that are available on your CAPELLA. Touch to choose which function to review. Touch RETURN TO DRIVING to revert to main driving screen.

SET TIME

To reset the vehicle's digital clock, touch RESET TIME to begin. Touch the + and – symbols to change the numerical and AM/PM settings. Touch SAVE when done. Touch RETURN TO DRIVING to revert to main driving screen.

RESET TRIP METER

Touch RESET TO ZERO to start a new trip. Touch RETURN TO DRIVING to revert to main driving screen.

VEHICLE INFORMATION

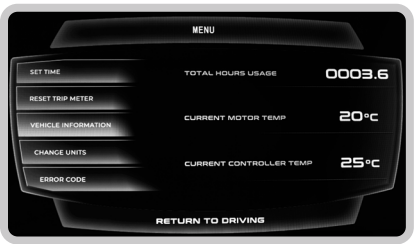

Review vehicle status and operations in real time. Touch RETURN TO DRIVING to revert to main driving screen

CHANGE UNITS

Touch CHANGE to select measurement units for temperature, speed / distance, and driving speed. Touch SAVE when done. Touch RETURN TO DRIVING to revert to main driving screen.

ERROR CODE

The codes displayed guide you to the source of any engine alerts or operational malfunctions, so you can take appropriate precautions. These codes also provide valuable information for troubleshooting and preventive maintenance.
Touch RETURN TO DRIVING to revert to main driving screen.

ALWAYS REMEMBER TO RECHARGE BATTERY AFTER EACH USE!

Read all of SAFETY and this section before attempting any procedure.
Pay particular attention to Notices, Cautions, Warnings and Dangers

ON-BOARD CHARGERS

⚠ DANGER

Risk of electric shock. Connect the charger power cord to an outlet that is correctly installed and connected to an electrical ground according to all codes and regulations. A grounded outlet is necessary to decrease the risk of electric shock – do not use ground adapters or replace the plug. DO NOT touch parts of output connector or battery terminals that do not have insulation.

⚠ DANGER

DO NOT open or disassemble the charger. DO NOT operate the charger if the AC cord is damaged. Make sure qualified personnel do all repair work to the charger.

⚠ WARNING

Do not allow children to use the charger. To prevent over-heating that can cause damage to the charger and possible fire, keep the charger away from other objects. Use the charger on 48-volt battery systems. Other use can cause personal injury and damage. Lead acid batteries can create explosive hydrogen gas during normal operation. Keep sparks, flames and flammable materials away from batteries. Supply enough ventilation during the charge cycle. Never charge a frozen battery. Read all of the manufacturers specified precautions for the battery such as recommended rates of charge and removal of cell caps during charge cycle.

Read all of SAFETY and this section before attempting any procedure.
Pay particular attention to Notices, Cautions, Warnings and Dangers

NOTICE

Put the charging cord through the center of the steering wheel to remind you to put the cord away when finished with the charger. You can damage the plug if you drive over or catch the cord on the vehicle when you drive away.

⚠ WARNING

To decrease the possibility of electrical shock or electrocution, make sure that the charger plug is not damaged and is correctly connected to a grounded outlet The power AC cord has a plug with a ground post. Do not remove, cut or bend the ground post. The charger cord has a polarized connector which fits into a receptacle on the

⚠ WARNING

If the vehicle is charged with a charger different from the one supplied with the vehicle, refer to the instructions supplied with the charger used.

PROVIDE PROTECTION FROM ELEMENTS

Keep cooling fins clean and free of dirt and debris NEMA 15 - 5R Grounded AC Receptacle 120V. Reference appropriate local electrical code and charger manufacturer recommendations for AC power requirements.

Read all of SAFETY and this section before attempting any procedure.
Pay particular attention to Notices, Cautions, Warnings and Dangers

HOW TO OPERATE THE VEHICLE

⚠ CAUTION

Incorrect use of the vehicle or lack of maintenance can cause damage or decreased performance. Read the following warnings before you operate the vehicle.

⚠ WARNING

To decrease the risk of severe injury or death resulting from loss of vehicle control, the following warnings must be obeyed:

When driving vehicle, understand the terrain, traffic conditions and the environmental conditions which change the terrain and the ability to control the vehicle. When possible, stay in approved areas and do not drive on steep slopes.

Speed in reverse must be limited to a maximum of 10 MPH.

Keep a safe speed when driving down hill. Use the brake to control speed when traveling down a slope. A sudden stop or change of direction can cause loss of control.

Decrease speed before and during turns. Never drive the vehicle up, down, or across a slope that is more than vehicle specified driving gradient.

Incorrect and irresponsible operation of this vehicle can cause dangerous conditions for the operator, passengers and other people in the area. **DO NOT** allow children or anyone without a license to operate the vehicle.

Drugs and alcohol decrease the ability of the driver to operate the vehicle safely. **DO NOT** operate the vehicle under the influence.

Do not take the vehicle out of gear while in motion (move without power). Check the area behind the vehicle before you operate in the reverse direction.

All persons must be seated. Keep entire body inside vehicle and hold on while vehicle is in motion. When you drive the vehicle at full speed on a dirt road, loose surface or wet grass, the necessary distance to stop the vehicle will increase.

Read all of SAFETY and this section before attempting any procedure. Pay particular attention to Notices, Cautions, Warnings and Dangers

The necessary distance to stop a loaded vehicle is more than the necessary distance to stop a vehicle without a load. In wet weather conditions, apply light pressure to the brakes to supply enough friction to dry the brake unit. Wet brakes lose much of their effect. If you drive on a steep hill and can't get enough traction, do not try to turn around on the hill. Slowly drive in reverse and use the brake to control the speed.

DIRECTION SELECTOR OPERATION

⚠ WARNING

To prevent loss of control, do not move the direction selector to a different position while the vehicle is in motion. If you move the selector, the speed will immediately decrease and a warning device activates.

Move the direction selector to **FWD (forward)** to move in the forward direction. Move the direction selector to **REV (reverse)** to move in the reverse direction.

A reverse warning buzzer activates when the direction selector is moved to the **REV (reverse)** position. The position between **FWD (forward)** and **REV (reverse)** is the neutral position. When you leave the vehicle, turn the key to the OFF position and remove it from the key switch and apply the parking brake.

ACCELERATOR AND BRAKE PAD OPERATION

With the key switch in the **FWD (forward) or REV (reverse)** position press the accelerator pedal *(1),* which starts the motor and the vehicle moves in the direction indicated on the key switch / direction selector. To stop the vehicle quickly,press the brake pedal *(2)*

(Figure 16 - Accelerator and Brake Pedal Operation)

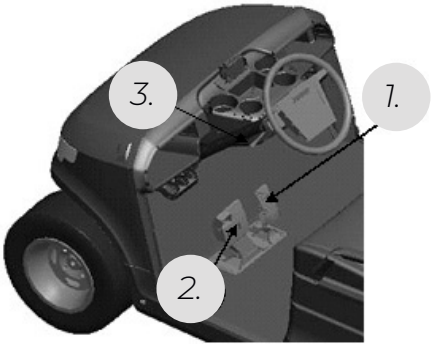

(Figure 16 - Accelerator and Brake Pedal Operation)

HORN *(if equipped)*

If the vehicle is equipped with a horn, the horn button *(3)* is located on the turn signal switch. Pressing the button *(3)* will sound the vehicle's horn.

(Figure 16 - Accelerator and Brake Pedal Operation)

Read all of SAFETY and this section before attempting any procedure.
Pay particular attention to Notices, Cautions, Warnings and Dangers

REGENERATIVE BRAKING

⚠ WARNING

To prevent the possibility of loss of control that could cause severe injury or death, use brake to reduce speed. This vehicle is equipped with a regenerative motor control system. Example: If both of the following events occur:

a. **The vehicle is being driven down a slope.**
b. **The driver attempts to exceed the specified top speed with the accelerator pedal pressed or released**

The regenerative braking will limit the speed of the vehicle to the specified top speed. When the regenerative braking system is activated by this sequence of events, the motor generates power that is returned to the batteries. When the vehicle speed is reduced below the maximum by using the brake, the speed will not increase unless the throttle is increased. When the brake pedal is released the vehicle will slow down as it does with pedal up braking.

PEDAL-UP BRAKING

Pedal-up braking is regenerative braking that occurs when the accelerator pedal is released while the vehicle is moving. Example: If both of the following events occur:

a. **The vehicle is being driven down a slope**
b. **The accelerator pedal is released**

The pedal-up braking will slow the vehicle until the vehicle stops, or the accelerator is applied. When pedal-up braking system is activated by this sequence of events, the motor generates power that is returned to the batteries.

HIGH PEDAL DISABLE FEATURE

High pedal disable prevents acceleration if the key is turned on while the accelerator or brake are pressed. To reset the controller after a High Pedal Disable, place both feet on the floor, turn the key to the **OFF** position.
With both feet on the floor turn the key on, select desired direction, and press the accelerator. To start the vehicle on a hill press the accelerator pedal.

Read all of SAFETY and this section before attempting any procedure.
Pay particular attention to Notices, Cautions, Warnings and Dangers

STARTING AND DRIVING

All vehicles have an interlock system that disables the controller and prevents operation or tow of the vehicle while the charger is connected. Remove the charger plug from the receptacle and correctly store the cable before you move the vehicle.

To operate the vehicle:

- Turn the key switch on, select desired direction.
- Slowly press the accelerator pedal to start the motor.
- When the accelerator pedal is released, the motor decreases the speed of the vehicle. To stop the vehicle, press the brake pedal.

NOTICE

When the direction selector is in the reverse position, a warning signal will sound to indicate that the vehicle is ready to run in reverse.

STARTING VEHICLE ON A HILL

To start the vehicle on a hill press the accelerator pedal and the parking brake will be released.

COASTING

Uncontrolled coasting is not a substitute for the brake which must be used to quickly decrease the speed of the vehicle.

Read all of SAFETY and this section before attempting any procedure.
Pay particular attention to Notices, Cautions, Warnings and Dangers

ROOF AND WINDSHIELD

⚠ WARNING

The roof does not provide protection from roll-over or falling objects.
The windshield does not provide protection from tree limbs or flying objects.
The roof and windshield provide some protection from the elements; however, they will not keep the operator and passenger dry in heavy rain.
This vehicle is equipped with seat belts but the roof has not been designed to provide roll-over protection. In addition, the roof does not protect against falling objects nor does the windshield protect against flying objects and tree limbs.
Keep arms and legs inside whenever the vehicle is in motion.

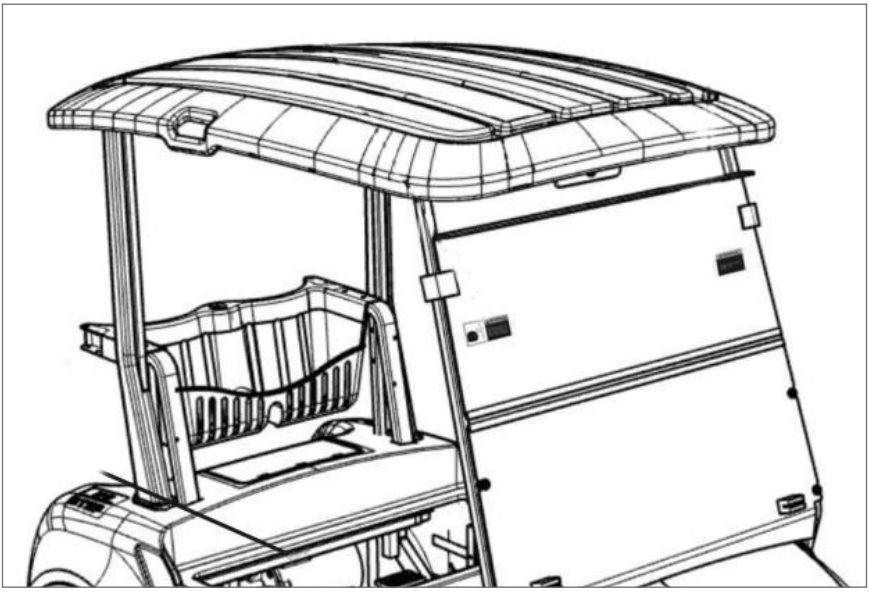

Read all of SAFETY and this section before attempting any procedure.
Pay particular attention to Notices, Cautions, Warnings and Dangers

VEHICLE CLEANING AND CARE

⚠ WARNING

To decrease the risk of severe injury read and understand all instructions supplied by the manufacturer of the pressure washer before use.

⚠ CAUTION

When you clean the outside of the vehicle with a pressure washer, do not use more than 700-psi pressure. Keep a minimum distance of 12 inches from the spray nozzle to the painted surface. Do not clean the plastic parts with abrasive solvents.

ENVIRONMENTAL CONCERNS

⚠ WARNING

As a responsible user, practice respect for all wildlife and their habitat. Respect private property and comply with all local laws and regulations governing the use of light duty utility vehicles.

- Always be respectful of the environment.
- Make sure you are permitted by property owners to operate the vehicle on their property.
- There is a risk of fire when the vehicle is operated near combustible material.
- Be careful of environmental hazards like steep slopes, tree branches, etc.

BATTERY DISPOSAL

Return used lead acid batteries to the manufacturer or lead smelter for recycling purposes. For neutralized spills, put residue in acid-resistant containers with absorbent material, sand or earth and discard according to state and federal regulations for acid and lead compounds. Contact authorized environmental people for information about disposal.

Read all of SAFETY and this section before attempting any procedure.
Pay particular attention to Notices, Cautions, Warnings and Dangers

LIFTING THE VEHICLE

You must lift the front, the rear or the entire vehicle for some service and maintenance operations.

⚠ WARNING

- The vehicle is not stable during the lifting process.
- Make sure the vehicle is on a hard and level surface.
- Never get below a vehicle that is supported by a jack only.
- Make sure a vehicle that is supported on jack stands is stable before you get below the vehicle.
- Put wheel chocks in front and behind the wheels that remain on the ground.
- DO NOT allow any person in or on the vehicle being lifted.

⚠ CAUTION

When you lift the vehicle, put the jacks and jack stands at the areas indicated only.

Tool List	*Quantity*
Floor Jack	*1*
Wheel Chocks	*4*

Tool List	*Quantity*
Jack Stands	*1*

Remove payload from vehicle before lifting. No person(s) should be in or on the vehicle while lifting.

HOW TO LIFT THE ENTIRE VEHICLE:

1. Install wheel chocks in front and behind each front wheel.
2. Center the jack under the bag well.
3. Lift the vehicle enough to place two jack stands under the frame where the leaf spring mounting brackets are welded to the frame.
4. Lower the jack and test the stability of the vehicle on the two jack stands.
5. Place the jack under the center front just behind the bumper.
6. Lift the vehicle and place two jack stands under the frame where the instrument panel support is attached to the frame.
7. Lower the jack and test the stability of the vehicle on the jack stand

Read all of SAFETY and this section before attempting any procedure. Pay particular attention to Notices, Cautions, Warnings and Dangers

HOW TO LIFT THE REAR OF THE VEHICLE ONLY:

1. Install wheel chocks in front and behind each rear wheel.
2. Center the jack under the bag well.
3. Lift the vehicle enough to place two jack stands under the frame where the leaf spring mounting brackets are welded to the frame.
4. Lower the jack and test the stability of the vehicle on the jack stands.

HOW TO LIFT THE FRONT OF THE VEHICLE ONLY:

1. Install wheel chocks in front and behind each front wheel.
2. Place the jack under the center front just behind the bumper.
3. Lift the vehicle and place two jack stands under the frame where the instrument panel support is attached to the frame.
4. Lower the jack and test the stability of the vehicle on the jack stands.

LOWERING THE VEHICLE:

1. Lift the vehicle enough to remove the jack stands.
2. Carefully lower the vehicle to the ground with the jack.

Read all of SAFETY and this section before attempting any procedure.
Pay particular attention to Notices, Cautions, Warnings and Dangers

WHEELS AND TIRES

Please follow the inflation spec printed on the side of the tire.

⚠ WARNING

- To decrease the risk of tire explosion, add small amounts of air to the tire at intervals to seat the tire beads. (1) Over inflation of small tires can occur in a few seconds.
- Do not over inflate the tires. Excess pressure can cause the tire to separate from the wheel or explode.
- Protect face and eyes when removing a tire valve core.
- Use only sockets made for use with impact wrenches to decrease the risk of injury caused by a broken socket.
- Do not use tires that have a recommended tire inflation pressure less than the tire pressure recommended.

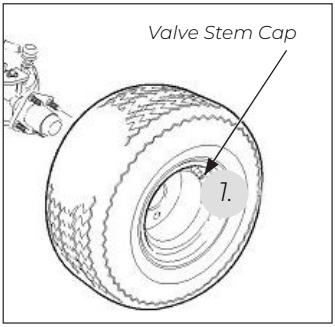

Read all of SAFETY and this section before attempting any procedure.
Pay particular attention to Notices, Cautions, Warnings and Dangers

TIRE REPAIR

Tool List	*Quantity*
Lug Wrench ¾"	*1*
Impact Wrench	*1*

Tool List	*Quantity*
Impact Socket ¾"	*1*
Torque Wrench ft. lbs	*1*

Use caution when you inflate the tires. Because of the low volume of the small tires, over inflation can occur in seconds. Over inflation can cause the tire to separate from the wheel or cause a tire explosion.

For outdoor applications with primary use on areas with grass, consider the following:

- Slightly higher tire inflation pressure is suitable on hard turf
- A lower pressure decreases the risk of tires cutting into a soft turf
- For hard surfaces or pavement, tire inflation pressure must be in the higher allowed range, but not more than recommended on the tire sidewall.
- All four tires must have the same pressure for best control qualities.
- Always install the valve stem cap after you check or inflate the tires.
- The vehicle has low-pressure tubeless tires, installed on one-piece rims.
- Use a tire plug to repair small holes in the tread part of the tire. For large holes and cuts, replace the tire.
- Tire plug tools and plugs are available at automotive outlets. The tires DO NOT have to be removed from the wheel to install the tire plugs.
- If the tire is flat, remove the wheel and inflate the tire to the recommended maximum pressure for the tire. Submerge the tire in water to find the leak and mark with chalk. Install the tire plug according to manufacturer instructions.

Read all of SAFETY and this section before attempting any procedure.
Pay particular attention to Notices, Cautions, Warnings and Dangers

WHEEL INSTALLATION

CAUTION

To decrease the risk of component damage, do not tighten lug nuts to more than 85 ft. lbs. (115 Nm) torque.

NOTICE

Always follow the cross-sequence pattern when you install the lug nuts to make sure the wheel is evenly seated against the Cross sequence hub.

- With the valve stem to the outside of the wheel, install the wheel on the hub with lug nuts.
- Tighten the lug nuts **(1)** with your fingers in the cross-sequence pattern shown.
- Tighten the lug nuts to 50 to 85 ft-lbs. (70 to 115 Nm) torque in 20 ft-lbs. (27 Nm) increments.
- Continue to follow the cross sequence pattern until the correct torque is reached.

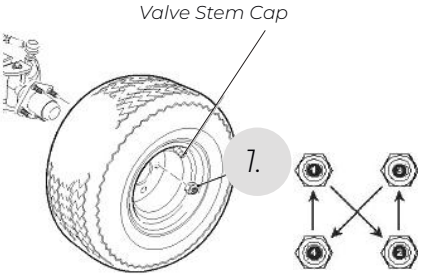

Tire style may vary

Read all of SAFETY and this section before attempting any procedure. Pay particular attention to Notices, Cautions, Warnings and Dangers

⚠ CAUTION

To decrease the risk of premature bulb failure, do not allow your fingers to contact new bulbs. Use clean, dry paper or paper towels to touch the glass part of the bulb.

HEADLIGHT *(if equipped)*

Make sure that the vehicle key switch is in the **OFF** position and the key has been removed. For vehicles equipped with lights mounted in the cowl locate the headlight bulb socket on the backside of the light assembly.

Changing the bulb:

- Disconnect wiring harness *(3)* and *(8)* *(Figure 17 - Headlight)*
- Pull out *(4)* and take out the bulb. *(Figure 17 - Headlight)*
- Remove the wiring harness connected with the bulb at *(9) by wire.* *(Figure 17 - Headlight)*
- Replace the bulb and connect the wiring harness to *(9) position*.
- Connect wiring harness *(3) to (8)* *(Figure 17 - Headlight)*

Change the whole headlight:

- Disconnect wiring harness *(3)* and *(8)* *(Figure 17 - Headlight)*
- Use cross screwdriver to remove bolts at *(5) (6) (7)* and take out headlamp assembly. *(Figure 17 - Headlight)*
- Replace the headlights and fix the bolts at *(5) (6) (7)* *(Figure 17 - Headlight)*
- Connect wiring harness *(3) and (8)* *(Figure 17 - Headlight)*

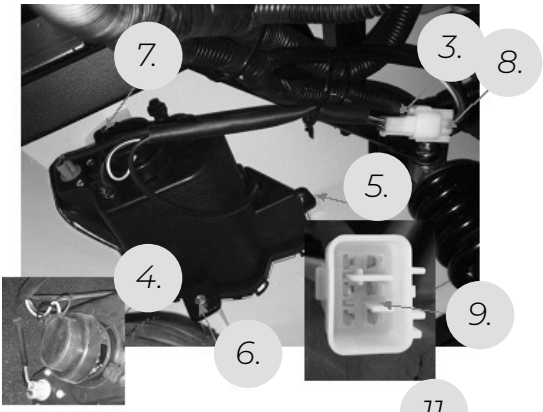

(Figure 17 - Headlight)

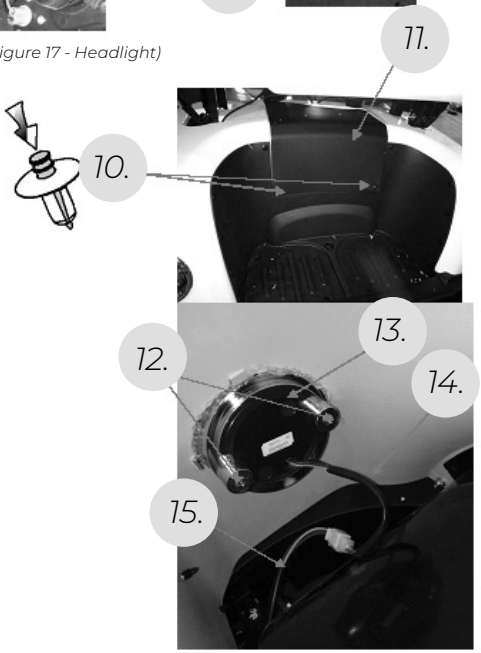

Read all of SAFETY and this section before attempting any procedure.
Pay particular attention to Notices, Cautions, Warnings and Dangers

TAIL LIGHT & BRAKE LIGHT *(if equipped)*

Make sure that the vehicle key switch is in the **OFF** position and the key has been removed.

- Remove the glue *(10)* *(Figure 18 Tail light / Brake)* with a cross screwdriver and remove the repair cover *(11)*. *(Figure 18 Tail light / Brake)*
- Remove the *(12)*. *(Figure 18 Tail light/Brake)* screw with a cross screwdriver and remove the rear taillight *(13)*. *(Figure 18 Tail light / Brake)*
- Separate the wiring harness *(14) and (15)* *(Figure 18 Tail light / Brake)* to remove the rear taillight *(13)*. *(Figure 18 Tail light / Brake)*
- Replace the rear lights and connect the wiring harness *(14) and (15)*. *(Figure 18 Tail light / Brake)*
- Fix bolts with cross screwdrivers *(12)*. *(Figure 18 Tail light / Brake)*
- Cross the repair cover *(11)* and fix the glue *(10)* *(Figure 18 Tail light / Brake)*

Read all of SAFETY and this section before attempting any procedure.
Pay particular attention to Notices, Cautions, Warnings and Dangers

TRANSPORTING VEHICLE (TOWING)

⚠ WARNING

USE EXTRA CAUTION WHEN TOWING A VEHICLE

- **DO NOT** ride on the vehicle being towed.
- **DO NOT** try to tow the vehicle with ropes, chains or any device other than tow bar approved by the factory.
- **DO NOT** tow the vehicle on highways.
- **DO NOT** tow a single vehicle at speeds in excess of 12 mph (19 kph).
- **DO NOT** exceed 5 mph (8 kph) while towing multiple vehicles
- **DO NOT** tow more than three vehicles at a time.

⚠ CAUTION

- Before towing the vehicle, please release the parking pedal to prevent damage to the brake system, motor and controller.
- **DO NOT** tow a single vehicle at speeds in excess of 12 mph (19 kph).
- **DO NOT** tow more than three vehicles at a time.

DO NOT exceed 5 mph (8 kph) while towing multiple vehicles. Towing the vehicle above the recommended speed may result in severe injury and/or damage to the vehicle and other property. Tow bars are not intended for road use.

- Never use ropes or chains to tow vehicle(s). Tow bars are available from the Service Parts Department. Tow bars are not intended for highway use.
- **DO NOT** ride on a vehicle being towed. Tow bars are designed to tow only one vehicle at a maximum speed of 12 mph (19 kph) and up to three vehicles at a maximum speed of 5 mph (8 kph).

⚠ CAUTION

- Make sure you secure the vehicle and all items before you transport a vehicle on a trailer.

Read all of SAFETY and this section before attempting any procedure.
Pay particular attention to Notices, Cautions, Warnings and Dangers

SERVICE AND MAINTENANCE

⚠ WARNING

Read all notices, cautions and warnings in this manual before you do any type of service operations.

- The drive wheels must be lifted and supported on jack stands before you do any service to the power train when the motor is in operation.
- To decrease the risk of motor damage, do not operate the vehicle at full throttle for more than 5 seconds with the drive wheels lifted off the ground.
- Disconnect the negative battery cable before you service the vehicle to prevent accidental operation.

Wear eye protection when you service the vehicle.
Be careful when you do work around batteries, use solvents or compressed air.

- To decrease the risk of electrical arc, which can cause a battery explosion, disable all electrical loads from the battery before you remove the battery wires.
- Use wrenches with insulation to decrease the risk of a short circuit if a wrench falls across the battery terminals. A battery short-circuit can cause an explosion.
- The electrolyte in a battery is an acid solution which can cause burns to the skin and eyes.
- Completely clean all electrolyte spills that contact the body and eyes with clear water. Contact a physician immediately.
- Neutralize electrolyte spills with a solution of 2 teaspoons (10 ml) sodium bicarbonate (baking soda) mixed in 1 quart (1 liter) of water. Clean with water.
- Be careful when you use aerosol containers near battery terminals. Use a metal container that has insulation to prevent an explosion.

Read all of SAFETY and this section before attempting any procedure.
Pay particular attention to Notices, Cautions, Warnings and Dangers

The vehicle owner and service technician must carefully follow the procedures recommended in this manual. The preventative maintenance, applied at recommended intervals, keeps the vehicle dependable and decreases costs for repairs. Refer to the Periodic Service Schedule for service and intervals. Refer to Lubrication Points for correct lubrication locations.

ROUTINE MAINTENANCE

⚠ CAUTION

To increase the life of a vehicle that is used in rough conditions, some maintenance must be done more often than recommended in the Periodic Service Schedule. For example: high or low temperatures, high dust and dirt conditions, high use with maximum load.

To access the power train for normal maintenance, lift or remove the seat and remove the rear access panel. For major repairs, please contact your STAR EV® Dealer.

Some service procedures make it necessary to lift the vehicle.
Refer to LIFTING THE VEHICLE for correct lift procedure and safety information.

TIRE INSPECTION

Inspect the tire condition according to the Periodic Service Schedule.
Tire inflation pressures must be checked when the tires are cool.
Always install the valve dust cap after you check or inflate the tires.

Read all of SAFETY and this section before attempting any procedure.
Pay particular attention to Notices, Cautions, Warnings and Dangers

BRAKES

⚠ WARNING

- Always inspect the pedal travel before you operate a vehicle to confirm some brake function is exist.
- Make sure you do all brake tests in a safe location with regard to the safety of all personnel.

NOTICE

- A subtle loss of performance can occur over time; therefore, it is important to establish the standard with a new vehicle.
- The Periodic Brake Performance Test should be performed regularly as an evaluation of braking system performance. It is useful as a method of identifying subtle loss of performance over time.

REAR AXLE

Unless leakage is visible, the lubricant needs to be replaced after five years. Refer to the Service and Repair Manual for the fluid replacement procedure.

CHECKING THE LUBRICANT LEVEL

Clean the area around the check/fill plug and remove the plug. The correct lubricant level is just below the bottom of the threaded hole. If lubricant is low, add lubricant as required. Add lubricant (0.65L, 75 W/90 GL-5) slowly until lubricant starts to seep from the hole. Install the check/fill plug. In the event that the lubricant is to be replaced, the oil pan must be removed or the oil siphoned through the check / fill hole.

Read all of SAFETY and this section before attempting any procedure.
Pay particular attention to Notices, Cautions, Warnings and Dangers

HARDWARE

Normally, three classes of standard hardware and three classes of metric hardware are used in the lead acid vehicle. (Battery is standard other metric) Grade 5 hardware is identified by the three marks on the hexagonal head; grade 8 hardware is identified by six marks on the head; grade 2 hardware is not marked. The class specification is marked on metric hardware. Inspect the vehicle for loose fasteners periodically. The fasteners must be tightened carefully and according to the Torque Specifications table or as specified in the Repair and Service Manual.

All TORQUE FIGURES ARE IN FT. LBS (Nm)

Unless otherwise noted in text, tighten all hardware in accordance with this chart. This chart specifies "lubricated" torque figures. Fasteners that are plated or lubricated when installed are considered "wet" and require approximately 80% of the torque for "dry" fasteners.

Bolt Size		1/4"	5/16"	3/8"	7/16"	1/2"	9/16"	5/8"	3/4"	7/8"	1"
Grade 2		4 (5)	8 (11)	15 (20)	24 (33)	35 (47)	55 (75)	75 (102)	130 (176)	125 (169)	190 (258)
Grade 5		6 (8)	13 (18)	23 (31)	35 (47)	55 (75)	80 (108)	110 (149)	200 (271)	320 (434)	480 (651)
Grade 8		6 (8)	18 (24)	35 (47)	55 (75)	80 (108)	110 (149)	170 (230)	280 (380)	460 (624)	680 (922)
Bolt Size		M4	M5	M6	M8	M10	M12	M14			
Class 5.8 (Grade 2)	5.8	1 (2)	2 (3)	4 (6)	10 (14)	20 (27)	35 (47)	55 (76.4)			
Class 8.8 (Grade 5)	8.8	2 (3)	4 (6)	7 (10)	18 (24)	35 (47)	61 (83)	97 (131)			
Class 10.9 (Grade 8)	10.9	3 (4)	6 (8)	10 (14)	25 (34)	49 (66)	86 (117)	136 (184)			

(Figure 19 - TORQUE Specifications and Bolt Grades)

Read all of SAFETY and this section before attempting any procedure.
Pay particular attention to Notices, Cautions, Warnings and Dangers

LEAD ACID BATTERY CHARGING & MAINTENANCE (SAFETY)

Always obey the following warnings when working on or near batteries.

⚠ WARNING

To prevent the risk of battery explosion, keep all flammable materials, open flames or sparks away from the batteries. Hydrogen gas is made as batteries are charged. Do not charge batteries without good ventilation. A 4% concentration of hydrogen gas is explosive. Make sure that the key switch is in the OFF position and all electrical accessories are off before you start to work on the vehicle. Turn off all accessories before disconnecting from the battery terminal.

Use safe procedures to move the batteries. Always lift the battery with a commercially available battery lifting device.

Do not tilt the batteries during removal or installation. An electrolyte spill can cause burns and damage.

Neutralize electrolyte spills with a solution of 2 teaspoons (10 ml) sodium bicarbonate (baking soda) mixed in 1 quart (1 liter) of water. Clean with water.

If you fill the batteries with electrolyte above the maximum level, you can cause an electrolyte spill during the charge cycle. An electrolyte spill can cause damage to the vehicle and storage facility.

Be careful when you use aerosol containers near the battery terminals. Use a container with insulation to prevent an explosion.

Always wear a safety shield or approved safety goggles when you add water or charge the batteries.

Read all of SAFETY and this section before attempting any procedure.
Pay particular attention to Notices, Cautions, Warnings and Dangers

LEAD ACID BATTERY

The batteries in this vehicle are lead acid. A battery does not store electricity, but it can produce electricity as the result of a chemical reaction which releases stored chemical energy in the form of electrical energy. The chemical reaction occurs faster in warm conditions and slower in cold conditions. Temperature is important when conducting tests on a battery and test results must be corrected to adjust for temperature differences. An older battery can perform adequately except that its capacity is decreased. Capacity describes the time that a battery can continue to supply its design amperes from a full charge. A battery has a maximum life. Good maintenance maximizes the available life and decreases the conditions that can decrease the life of the battery.

LEAD ACID APPLICATIONS

Accessories, including a DC to DC converter, that are connected to this vehicle and do not use the accessory wire harness must be connected across the entire 48V battery pack. To correctly connect a 48 Volt accessory, connect one wire to the main positive battery pack terminal and the second wire to the main negative battery pack terminal as shown. If an accessory requires voltage different than 48 Volts a DC to DC converter must be used to change the voltage to the correct amount. A DC to DC converter is available for purchase from STAR EV® Service Parts.

BATTERY MAINTENANCE

Tool List	*Quantity*	*Tool List*	*Quantity*
Insulated Wrench 9⁄16”	1	Battery Carrier	1
Hydrometer	1	Battery Maintenance Kit P/N 25587G01	1
Battery Protective Spray	1	Socket 9⁄16”	1

CHARGING CYCLE

- Before you charge the batteries, inspect the plug of the battery charger and vehicle receptacle housing for dirt or other particles.

Charge the batteries after each use.

Read all of SAFETY and this section before attempting any procedure.
Pay particular attention to Notices, Cautions, Warnings and Dangers

MONTHLY INSPECTION

- Inspect all wires for wear, loose connections, corrosion or damage of insulation.
- Make sure that the electrolyte level is correct and add clean water as required.
- Clean the batteries and wire connections.
- Apply battery protectant to the battery terminals.

ELECTROLYTE LEVEL AND WATER

- The correct level of the electrolyte is ½" (13 mm) above the plates in each cell.
- This level will leave approximately ¼" - ⅜" (6-10 mm) of space between the electrolyte and the vent tube.
- The electrolyte level is important because any part of the plates open to air will be damaged.
- DO NOT overfill with water. Too much water pushes the electrolyte from the battery by release of gas and a decrease in volume of the electrolyte.

Read all of SAFETY and this section before attempting any procedure.
Pay particular attention to Notices, Cautions, Warnings and Dangers

DO NOT overfill batteries. The charge cycle will expel electrolyte and cause component damage.

A battery being charged will gas with most gassing occurring at the end of the charging cycle. This gas is hydrogen which is lighter than air. Water and sulphuric acid droplets will be carried out of the battery vents by the hydrogen gas, however, this loss is minimum. If the electrolyte level is high, the electrolyte will block the vent tube and the gas will push it out the vent tube and battery cap. The water will dry but the sulphuric acid will stay and damage the vehicle components and the storage facility floor. Sulphuric acid loss will weaken the amount of acid within the electrolyte and decrease the life of the battery.

Over the life of the battery, a large amount of water is used. The water used must be clean and without contamination. Water that is not clean decreases the life of the battery by reducing the chemical reaction. Use distilled water or filtered water only. Test water that is not distilled water and filter if needed. Refer to the water purity table for requirements.

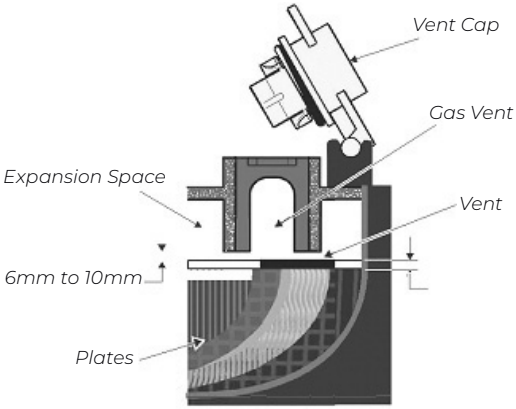

Electrolyte level should be at least 1/2" (13mm) above the plates and 1/4" to 3/8" (6 to 10mm) below vent

Read all of SAFETY and this section before attempting any procedure.
Pay particular attention to Notices, Cautions, Warnings and Dangers

WATER PURITY TABLE

Impurity	*Parts Per Million*
Color	*Clear*
Suspended	*Trace*
Total Solids	*100*
Calcium and Magnesium Oxides	*40*
Iron	*5*
Ammonia	*8*
Organic and Volatile Matter	*50*
Nitrites	*5*
Nitrates	*10*
Chloride	*5*

⚠ WARNING

The electrolyte in a battery is an acid solution which can cause severe burns to the skin and eyes. Clean all electrolyte spills to the body and eyes with clear water. Contact a physician immediately. To clean an electrolyte spill, use a solution of 2 teaspoons (10 ml) sodium bicarbonate (baking soda) mixed with 1 quart (1 liter) of water.

Always wear a safety shield or approved safety goggles when you add water or charge the batteries.

Read all of SAFETY and this section before attempting any procedure.
Pay particular attention to Notices, Cautions, Warnings and Dangers

BATTERY CLEANING

⚠ CAUTION

- To prevent battery damage, make sure you correctly install all battery caps.
- To decrease the risk of damage to vehicle or floor, neutralize acid before you spray the battery with water.
- To decrease the risk of damage to the electrical components while cleaning, do not use a pressure washer.
- Clean the batteries according to the Periodic Service Schedule.
- When you clean the battery cases and terminals, do not use a water hose without neutralizing any acid deposits first. The water hose moves the acid from the top of the batteries to another area of the vehicle or storage facility, where it can cause damage. After spraying the batteries, a conductive residue remains on the batteries and contribute to the dis-charge of the batteries.

PREPARING ACID NEUTRALIZING SOLUTION

The correct cleaning method is to spray the top and sides of the batteries with a solution of baking soda and water. Apply this solution with a plastic spray bottle. The solution is 2 teaspoons (10 ml) sodium bicarbonate (baking soda) mixed with 1 quart (1 liter) of water. Spray the solution on all metal components near the batteries also. Allow the solution to set a minimum of three minutes. Use a soft bristle brush or cloth to clean the top of each battery to remove residue that can cause the discharge of the battery. Clean the area with low pressure clear water.

Read all of SAFETY and this section before attempting any procedure.
Pay particular attention to Notices, Cautions, Warnings and Dangers

⚠ WARNING

- Be careful when you use aerosol containers near the battery terminals. Use a container with insulation to prevent an explosion.
- Clean one time a month or more often in harsh conditions. After the batteries are clean and dry, apply a commercially available protectant to the terminals.

Tool List	*Quantity*	*Tool List*	*Quantity*
Insulated Wrench 5/16"	1	Socket 1/2" Deep-well	1
Socket 9/16"	1	Ratchet	1
Battery Carrier Strap	1	Torque Wrench in lbs	1
Portable Lifting Device	1	Torx Bit, 50 IP	1

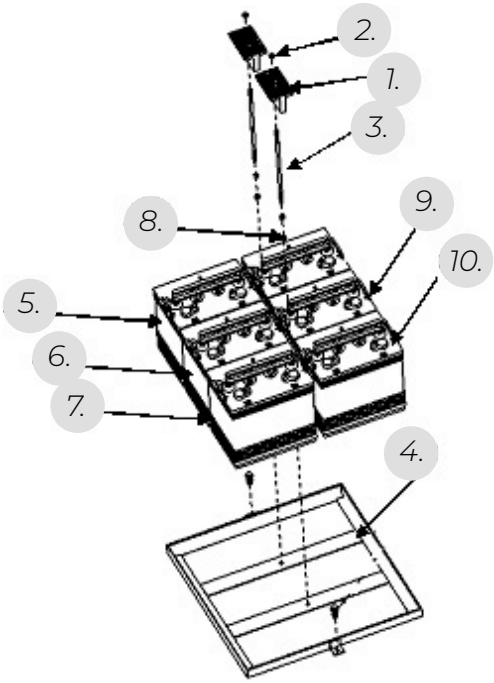

(Figure 20 - Battery Components)

Read all of SAFETY and this section before attempting any procedure.
Pay particular attention to Notices, Cautions, Warnings and Dangers

⚠ WARNING

The batteries are heavy. Use correct lifting methods when you move them. Always lift the battery with a commercially available battery lifting device. Be careful not to tilt batteries when you remove or installing them; spilled electrolyte can cause burns and damage.

NOTICE

Hardware that is removed must be installed in its original position unless otherwise specified. If torque values are not specified, refer to the Torque Specifications table.

1. Turn key switch to the **OFF** position and remove the key
2. Disconnect the main negative *(-)* battery cable *(BL-)*
3. Disconnect the main positive *(+)* battery cable *(BL+)*
4. Disconnect and remove all other wires connected to the battery.
5. 6 - 8V Battery System: Remove two hex nuts *(2)* securing battery *(1)* until they are at the end of the stub bolt *(3),* unhook the J-bolts from the battery tray *(4) (Figure 20 - Battery Components)*
6. Remove the batteries using commercially available battery carrier straps *(1 per battery)* and a portable lifting device. Remove the three front batteries *(5, 6 and 7)* one at a time; then remove the three rear batteries *(8,9 and 10)* to the front of the vehicle just enough to clear the rear body and lift up and out of the vehicle, one after another. *(Figure 1 Battery Components)*
7. Check the area around the battery tray for corrosion. If any corrosion is found, it must be immediately removed with a putty knife and a wire brush (for metal surfaces) or a plastic bristle brush.
8. Replace the batteries, starting with the battery *(6)* located at the rear end of the battery tray, by making sure that it is positioned as shown *(8,9,10) (Figure 20 - Battery Components)*
9. Firstly, the stud bolt and the battery rack is fixed together with nuts, then the battery fixer (1) is put into the pressure stud bolt, the hexagonal nut *(2)* is tightened by hand, and then the spanner plate nut is tightened to in. lbs. *(5 - 6.2 Nm). (Figure 20 - Battery Components)*

Read all of SAFETY and this section before attempting any procedure.
Pay particular attention to Notices, Cautions, Warnings and Dangers

10. Protect all wires and terminals and clean any corrosion from the battery terminals or wire terminals with a solution of baking soda and water, using a wire brush to completely remove corrosion if required.
11. Carefully reconnect the wires on the battery terminals as shown Make sure to reconnect the main negative (-) battery cable, BL-, from the controller lastly. *(Figure 20 - Battery Components)*
12. Tighten all battery terminal hardware to 98 - 105 in. lbs. (11 - 12 Nm) torque.
13. Protect the battery terminals and battery cable terminals with a commercially available protective coating.

PROLONGED STORAGE

⚠ CAUTION

Disconnect the battery charger, controller and other electronic devices for extended storage. All connected electronic components cause the dis-charge of batteries. *(Figure 21 - Battery Connections)*

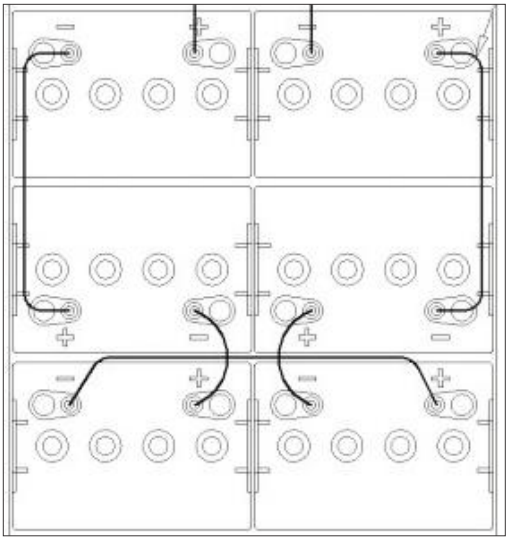

(Figure 21 - Battery Connections)

Read all of SAFETY and this section before attempting any procedure.
Pay particular attention to Notices, Cautions, Warnings and Dangers

NOTICE

In winter conditions, the battery must be completely charged to prevent the risk of freezing. A completely charged battery will not freeze in temperatures above 75°F (24°C). Although the chemical reaction is decreased in cold temperatures, the battery must be stored completely charged, and disconnected from circuits that can discharge the battery. The controller must be disconnected from the batteries by disconnecting the battery cables.

The batteries must be cleaned and all deposits neutralized and removed from the battery case to prevent self discharge. The batteries must be tested or charged again at 0 day minimum intervals.

BATTERY CHARGING

The battery charger is designed to completely charge the battery set. If the batteries are severely deep cycled, some automatic battery chargers contain an electronic module that will not activate and the battery charger will not operate. Automatic chargers determine the correct length of charge to the battery set and turns off when the batteries are charged. Always refer to the instructions of the charger used.

Do not overfill batteries. The charge cycle will expel electrolyte and cause component damage. Before charging, the following must be observed:

- The electrolyte level in all cells must be at the recommended level and above the plates.
- The charging must occur in an area with good ventilation to remove hydrogen gas that is made during the charge cycle. A minimum of five air replacements for each hour is recommended.
- The charger connector components must be in good condition and free from dirt and particles.
- The charger connector must be completely inserted in the vehicle receptacle.
- The charger connector and cord set must be protected from damage.
- The charger connector and cord set must be used in an area where it is not possible for personnel to run over or trip over the cord set.
- The charger automatically turns off during the connect and disconnect cycle so no electrical arc is generated at the DC plug and receptacle contacts.

Read all of SAFETY and this section before attempting any procedure.
Pay particular attention to Notices, Cautions, Warnings and Dangers

AC VOLTAGE

The battery charger output is directly related to the input voltage. If the vehicle receives an incomplete charge in a normally adequate time period, low AC voltage can be the cause. Consult an electrician if necessary.

FAULT DIAGNOSIS

Fault diagnosis is done for two reasons:

- A battery that performs poorly and is outside of the manufacturers specification must be identified to replace it within the terms of the manufacturer's warranty. Different manufacturers have different requirements. Refer to the battery manufacturer or the manufacturer's representative for specified requirements.
- Find the reason a vehicle does not perform adequately. Performance problems can cause a vehicle to run slowly or can't operate for the time needed.

A new battery must mature before it develops its maximum capacity. Maturing can take 100 or more charge and dis-charge cycles. After the maturing phase, the older a battery gets, the lower the capacity. The only method to find the capacity of a battery is a load test with a discharge machine. Refer to the discharge machine manufacturer instructions. A hydrometer is used to identify a poorly performing battery in a set with a low specific gravity. When the particular cell or cells that are the problem are identified, the battery can be removed and replaced. The battery can't be restored. The individual battery should be replaced with a good battery of the same brand, type and approximate age.

Read all of SAFETY and this section before attempting any procedure.
Pay particular attention to Notices, Cautions, Warnings and Dangers

HYDROMETER

A hydrometer is used to test the state of charge of a battery cell. This is performed by measuring the density of the electrolyte, which is accomplished by measuring the specific gravity of the electrolyte. The greater the concentration of sulfuric acid, the more dense the electrolyte becomes. The higher the density, the higher the state of charge.

CAUTION

To prevent battery explosion, never insert a metal thermometer into a battery. Use a hydrometer with a built in thermometer that is designed for testing batteries.

Specific gravity is the measurement of a liquid that is compared to a base- line. The baseline is water which is assigned a base number of 1.0. The concentration of sulfuric acid to water in a NEW golf car battery is 1.280 times the weight of the same volume of water. A fully charged battery will test at 1.275-1.280 while a discharged battery will read in the 1.140 range.

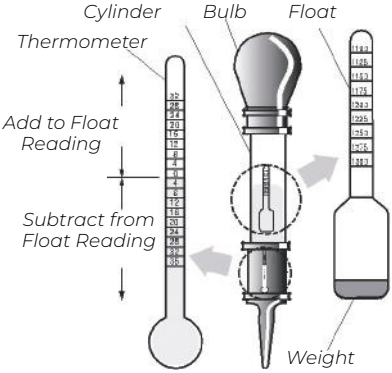

NOTICE

DO NOT perform a hydrometer test on a battery that has just been watered. The battery must go through at least one charge and discharge cycle in order to permit the water to adequately mix with the electrolyte.

The temperature of the electrolyte is important since the hydrometer reading must be corrected to 80° F (27° C). High quality hydrometers are equipped with an internal thermometer that will measure the temperature of the electrolyte and will include a conversion scale to correct the float reading. It is important to recognize that the electrolyte temperature is significantly different from the ambient temperature if the vehicle has been operated.

Read all of SAFETY and this section before attempting any procedure.
Pay particular attention to Notices, Cautions, Warnings and Dangers

1. Draw electrolyte into the hydrometer and release it several times to permit the thermometer to adjust to the electrolyte temperature and note the reading. Examine the color of the electrolyte. A brown or gray coloration indicates a problem with the battery and is a sign that the battery is nearing the end of its life.
2. Draw the minimum quantity of electrolyte into the hydrometer to permit the float to float freely without contacting the top or bottom of the cylinder.
3. Hold the hydrometer in a vertical position at eye level and note the reading where the electrolyte meets the scale on the float.
4. Add or subtract four points (.004) to the reading for every 10° F (6° C) the electrolyte temperature is above or below 80° F (27° C). Adjust the reading to conform with the electrolyte temperature, e.g., if the reading indicates a specific gravity of 1.250 and the electrolyte temperature is 90° F (32° C), add four points (.004) to the 1.250 which gives a corrected reading of 1.254. Similarly, if the temperature was 70° F (21° C), subtract four points (.004) from the 1.250 to give a corrected reading of 1.246.
5. Test each cell and note the readings (corrected to 80° F or 27° C). A variation of fifty points between any two cell readings (example 1.250 - 1.200) indicates a problem with the low reading cell(s).

As a battery ages the specific gravity of the electrolyte will decrease at full charge. This is not a reason to replace the battery providing all cells are within fifty points of each other. Since the hydrometer test is in response to a vehicle exhibiting a performance problem, the vehicle should be recharged and the test repeated. If the results indicate a weak cell, the battery or batteries should be removed and replaced with a good battery of the same brand, type and approximate age.

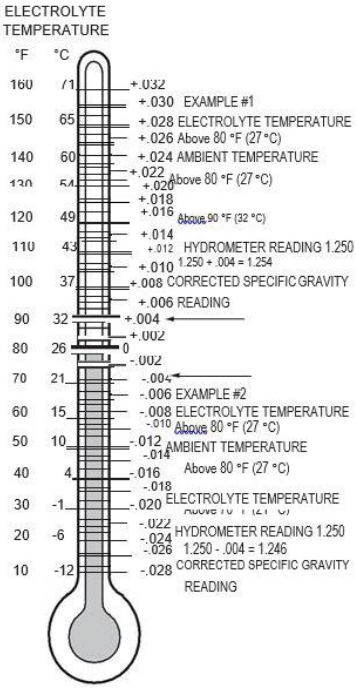

STAR LITHIUM BATTERY LINE

The STAR EV® Lithium battery line consists of four robust, hand selected options. Each battery is a different size, allowing you to choose the right amount of range for your lifestyle. In the battery chart below, we've outlined the expected ranges for each size. The ranges are all based on our 2 passenger models, on flat ground. If your vehicle is a longer model, or you predominately use it in a hilly area, this will affect the range. All these options are maintenance free, and ready to provide you with years of dependable service. All STAR EV® lithium batteries are sealed against moisture and dust intrusion, for increased longevity. The STAR EV® lithium flagship model is the 210Ah version. It gives you the most "bang for the buck", as far as range and ease of use.

BATTERY	80 AH	105 AH	160 AH	210 AH
2 Passenger Flat Ground Estimated Range*	15-25 Miles (24-40km)	30-40 Miles (48-64 km)	45-60 Miles (70-95 km)	50-80 Miles (80-129 km)
Nominal voltage / capacity	48 Volt / 80 AH	48 Volt / 105 AH	48 Volt / 160 AH	48 Volt / 210 AH
Stored energy	3.84 kWh	5.04 kWh	7.68 kWh	10.08 kWh
Max Continuous Discharging Current	80 A	105 A	160 A	200 A
Standard charging time	3-4 hours	5-6 hours	7-8 hours	9-10 hours
Communication	CAN2.0B and RS485, Bluetooth	CAN2.0B and RS485, Bluetooth	CAN2.0B and RS485, Bluetooth	CAN2.0B and RS485, Bluetooth
Recommended operating temperature range	Discharge: -20-60˚ C Charge: 0-45˚ C	Discharge: -20-60˚ C Charge: 0-45˚ C	Discharge: -20-60˚ C Charge: 0-45˚ C	Discharge: -20-60˚ C Charge: 0-45˚ C
BMS Protections:	Temp, over voltage, under voltage, over current	Temp, over voltage, under voltage, over current	Temp, over voltage, under voltage, over current	Temp, over voltage, under voltage, over current

* Different passenger configurations and terrain will affect maximum travel distance.

POWERING YOUR BATTERY UP

The top cover of each battery has a QR code to install the Smart Battery app, allowing you to view your battery's charge status, for added peace of mind. Your battery features a sleep mode, that will turn the power off after 1 hour of the key power being supplied without driving. If this happens, cycle your vehicle's key off and back on, to restart your battery (80Ah, 105Ah, and 160Ah have to press power button)

WARNINGS:

1. **DO NOT** disassemble the battery as it may cause electric shock, injury or death.
2. **DO NOT** short-circuit the battery, use it near/in heat or water source
3. **DO NOT** connect the battery with under sized cables for your application, this will cause overheating of the battery.
4. **DO NOT** damage, drop or strike. DO NOT weld on the battery case.
5. If the battery is damaged or malfunctioning, STOP using it and contact STAR EV® immediately.

LITHIUM MAINTENANCE

Your lithium battery requires very little maintenance. To clean the battery, wipe it down with a damp cloth. DO NOT spray down or immerse the battery with water. Yearly; use a 13 mm wrench or socket to check the main battery terminal bolts for tightness. The main terminal bolt torque should be 124 in-lb. You will see a 4-pin connector, located near your battery. Unplug this connector and inspect it for corrosion every six months.

- For prolonged storage, be sure to charge the battery to 100%, unplug the charger, you will be OK to leave the battery for up to 6 months after fully charging. When you return, the battery should be at 20% charge. Return the battery to full charge at this time.
- Your battery can be safety charged with the key in the OFF position.

OPERATING THE LITHIUM BATTERY

1. Strongly recommended to charge the battery after each use.
2. Charge the battery as soon as possible when the SOC is <10%
3. Avoid to discharge the battery to < 5%.
4. Strictly follow the operating temperature range below:

   — Discharge: -20˜60C (-4˜140F)
   — Charge: 0˜50C (32˜122F)
   — Storage: 0˜30C (32˜86F)
5. Even if not being used, fully recharge the battery at least once every 3 months, recommended to recharge every month.
6. Fully charge the battery before leaving if for a longer period of time (within 3 months)
7. In case used in golf cart, avoid accelerating harshly as it may cause current spikes, triggering the battery's self-protective cut-off.

STORAGE

1. For storage over one month, turn **OFF** the devices connected to the battery and push **OUT** the battery push button (if applicable) place the battery in a dry and ventilated location with temperature between 0˜30C° (32˜86F°)
2. **DO NOT** store the battery near corrosive material, fire or heat sources. Fully charge the battery before storage; Fully recharge the battery every 3 months.

LITHIUM WINTER STORAGE

Follow these steps to store your STAR EV® Lithium battery during winter:

1. FULLY charge your STAR EV® Lithium battery when storing
2. FULLY recharge the battery each month.
3. For storage over one month fully recharge the battery and TURN OFF the vehicle completely. (If applicable – TURN OFF the battery with the push.
4. Store the vehicle in a dry, ventilated location with a temperature above freezing 32°F (0°C)
5. **DO NOT** store the battery near corrosive material, fire, or heat sources.
6. **DO NOT** try to charge the battery or operate the vehicle if the temperature is below freezing 32°F (0°C)

LITHIUM BATTERY WARRANTY

The warranty is invalidated if any of the following occurs, but not limited to:

1. Failure to properly install the battery.
2. Failure to properly store the battery as indicated above.
3. Product that was used for applications other than which it was designed and intended for. (Example: Wrong voltage application)
4. Damage due to over tightening and stripping the terminals.
5. Damage due to shipping/mishandling of the product.
6. Breakage, freezing, wreckage, water damage, melted or broken terminals.
7. Product that has been opened, modified or tampered with.
8. Damage due to extreme hot/cold temperature outside the range defined above.
9. Leave the battery uncharged for more than 7 days after the SOC is < 10%.
10. Leave the battery uncharged for more than 1 day after the SOC is < 20% and environment temperature is > 45°C (113°F)

EXTREME TEMPERATURE USAGE

The max environmental temperature for safe discharge is 140°F (60°C)
DO NOT charge your battery in ambient temperatures above 113°F (45°C)
The charger should not be used on the battery under 32°F (0°C). If the battery is at or below this temperature, drive the vehicle before charging. This will warm the battery up internally, so that it can safely accept a charge.

BATTERY PROLONGED STORAGE (LEAD ACID / LITHIUM)

Batteries discharge over time. The rate of discharge changes according to the ambient temperature and the age and condition of the batteries. For winter storage, the batteries must be clean, completely charged and disconnected from any electrical drain.

STAR SMART LITHIUM APP

Check STAR-smart lithium battery's charge status coming and going, with STAR EV's new wireless energy-monitoring app. Verify input and output in real time, so there's no need to think twice when you're ready to ride.

1. **Download the App**

   For battery information, proactive monitoring and software updates download the STAR Lithium App and connect battery to smartphone through Bluetooth.
2. **Connect Battery**

   Using the Star Lithium app, connect battery to your wifi network.
3. **Charge**

   Charge the battery after each use and it will automatically check for updates.

IOS **ANDROID**

FAULT (RED) LED	CHARGE STATUS (YELLOW) LED	CHARGE COMPLETE (GREEN) LED	DESCRIPTION
Solid on	Solid on	Solid on	LED check for a few seconds during charger initialization
	Slow blink	Off	Bulk/STAR EV charge cycle phase (constant power or constant current)
	Fast blink	Off	Absorption/Plateau charge cycle phase (constant voltage). Greater than 80% charged.
	Solid on	Off	Finish charge cycle phase (constant current) Not all charge profiles include a finish phase.
	Off	Fast blink	Balance/Equalize phase. An extended charge cycle is occurring because a trigger condition has been met (cycle count, etc). Not all charge profiles include a Balance/Equalize phase.
	Off	Solid on	Charge cycle complete.
	Off	Slow blink	Charge cycle complete. Post Charge phase (constant voltage float, etc). Not all charge profiles include a Post Charge phase.
Slow blink	Slow blink	Slow blink	Charger Bluetooth connected to a smart phone or device, LEDs blink at the same time.

Read all of SAFETY and this section before attempting any procedure.
Pay particular attention to Notices, Cautions, Warnings and Dangers

▲ *General Maintenance Project* ★ *Advanced Maintenance Project*

Details of Regular Maintenance Users					
Maintenance Project	*Weekly (20H)*	*Monthly (80 H)*	*Quarterly (250 H)*	*6 months (500 H)*	*Annually (1000H)*
Check tire pressure	▲				
Check tires for abnormal wear	▲				
Check fastening of half axle bolts and wheel nuts	▲				
Tire rotation			▲		
Inspection of braking and parking efficiency		▲			
Check the wear of brake shoes			▲		
Check free travel and work of steering wheel			▲		
Check the tightness of each ball end of steering straightening rod		▲			
Inspection of spline coupling fixed nuts for steering gear		▲			
Check the tightness of steering mechanism and bracket		▲			
Check front wheel harness			▲		
Check the connection and tightening steering components			▲		
Check the fastening condition of U-shaped bolt of leaf spring			▲		
Check the pre-shock absorber	▲		▲		
Check battery electrolyte levels	▲				
Check battery electrolyte density					
Check the battery pole for being loose		▲			
Cleaning battery pole with water		▲			
Check the working condition of the relay		▲			
Clean and Fixed Line Connectors		▲			
Check the brake friction lining			▲		
Check front wheel bearings		▲			
Check the work of main reducer					★

Read all of SAFETY and this section before attempting any procedure.
Pay particular attention to Notices, Cautions, Warnings and Dangers

▲ *General Maintenance Project* ★ *Advanced Maintenance Project*

Details of Regular Maintenance Users					
Maintenance Project	*Weekly (20H)*	*Monthly (80 H)*	*Quarterly (250 H)*	*6 months (500 H)*	*Annually (1000H)*
Check the bearing of rear axle					
Check and replace differential gear oil		▲			★
Check the work of main reducer and bearing or rear axle		▲			★
Check the bolts and nuts of the motor			▲		★
Clean and lubricate font wheel bearings (with gear lubricants)					★
Check motor carbon brush			▲		
Lubricate other parts with (gear purpose oil)				★	

Read all of SAFETY and this section before attempting any procedure.
Pay particular attention to Notices, Cautions, Warnings and Dangers

Fault phenomenon	*Possible causes*	*Solution*
	Operator error	*See Operational Guidelines for Correct Operation*
	Terminal oxidation (corrosion)	*Turn off the power supply, remove the nuts, clean the terminals and install*
	Batteries are under-charged	*Charge*
	Direction switch damage	*Replace*
	Accelerator damage	*Replace*
	Motor damage	*Replace*
	Damage of directional contactor	*Replace*
	Wire harness socket loose	*Recover or Replace*
Vehicles travel slowly until they stop while climbing the slope.	*Whether the vehicle is overloaded, resulting in the controller temperature higher than 75 degrees Celsius and shutdown protection*	*Reduce vehicle load and let the controller cool down*
When a vehicle is running, release the acceleration pedal, and the vehicle will not slow down.	*Accelerated pedal spring rupture, resulting in pedal cannot be restored*	*Turn off the lock or press the emergency power off button then contact the manufacturer.*
Open the electric lock, the auxiliary electrical equipment of the whole car does not work.	*Fuse burnout or poor electrical contact*	*Replace fuse repair relay*
	Loose plug-in of alarm circuit	*Locking plug-in*
	Fuse burnt out	*Replace fuse*
	Tire pressure imbalance	*Inflation to balance tire pressure*
	Front and rear wheels uncorrected	*Correction wheel*
	Insufficient tire pressure	*Inflate*
	The steering linkage shaft lacks lubrication	*Add lube oil*
	Damage of steering pin or ball joint	*Replace*
	Ball joint damage	*Replace*
	Under-commissioning or wear of steering gear	*Debugging or replace*
	Relaxation of steering linkage axle	*Fastening*

Read all of SAFETY and this section before attempting any procedure.
Pay particular attention to Notices, Cautions, Warnings and Dangers

Fault phenomenon	*Possible causes*	*Solution*
Lack of speed and slow reaction	*Batteries are under-charged*	*Charge*
	Damage of differential gear	*Replace*
	Failure of Speed Control System	*Commissioning and maintenance*
	Damage to wheel bearings or washers	*Replace*
	Overfilling of oil	*Appropriate amount*
	Wear of differential gears or bearings	*Replace*
	Wear of front axle bearing or rear axle bearing	*Adjustment or replace*
	Wear of front axle bearing or rear axle bearing	*Adjustment or replace*
	Wear of front axle bearing or rear axle bearing	*Adjustment or replace*
	Damage of motor bearing	*Replace*
Insufficient braking force	*Brake wear*	*Replace*
The possible causes are for reference only and do not include all the causes leading to the above failures		

APPENDIX A
DECLARATION OF CONFORMITY

NOTICE

Read the following warnings before operating vehicle:

⚠ WARNING

- When you leave the vehicle, turn the key to the **OFF** position and remove the key from the vehicle and apply the parking brake.
- Drive the vehicle only as fast as terrain and conditions allow. Consider the terrain and traffic conditions. Consider environmental conditions that change the terrain and your ability to control the vehicle.
- Do not drive fast downhill. Sudden stops or change of direction can cause a loss of control. Use the brake to control the speed of the vehicle when you drive down a slope.
- When possible, stay in approved areas and do not drive on steep slopes.
- Always keep feet, legs, hands and arms inside vehicle.
- Do not drive on rough terrain.
- Before you drive in the reverse direction, make sure the area behind the vehicle is clear.
- Make sure the direction selector is in the correct position before you press the accelerator pedal.
- Decrease speed before and during turns.
- Make sure you completely stop the vehicle before you move the direction selector.
- See **GENERAL SPECIFICATIONS** for the vehicle load and seat capacity.

NOTICE

Read the following information and warnings before operating vehicle:

In any product, components will eventually fail to perform properly as the result of normal use, age, wear or abuse. Normal use, age, wear or abuse can cause some components on the vehicle to fail. The manufacturer can't know all possible component failures or the methods that failures can occur. A vehicle in need of repair does not operate correctly and can be dangerous. Be careful when you service the vehicle. Be aware of your safety and the safety of other people in the area. Some components are heavy, spring loaded, corrosive,explosive, can cause high amperage or get hot. Battery acid and hydrogen gas can cause injury. Do not put your hands, face, feet or body in a location that can expose them to injury if an unexpected situation occurs. Always use the correct tools shown in the tool list and wear safety equipment.

⚠ WARNING

- Remove all jewelry before you service the vehicle.
- DO NOT allow loose clothing or hair to contact the moving parts.
- DO NOT touch hot objects such as; brakes, chargers or controller.
- The drive wheels must be lifted and supported on jack stands before you do any service to the power train when the motor is in operation.
- When you service the vehicle, always wear eye protection. Be careful when you do work around batteries or you use solvents or compressed air.
- Use wrenches with insulation to decrease the risk of a short-circuit if a wrench falls across the battery terminals. A battery short-circuit can cause an explosion.
- To prevent the risk of battery explosion, keep all flammable materials, open flames or sparks away from the batteries.
- Hydrogen gas is made as batteries are charged. Do not charge batteries without good ventilation.

STAR EV® CORPORATION

378 Neely Ferry Road, Simpsonville, SC 29680 (USA) www.starev.com
All contents © 2025 STAR EV® CORPORATION, USA

2MM850