SKELCORE

SISSY SQUAT BENCH

SK-B-10

USER MANUAL

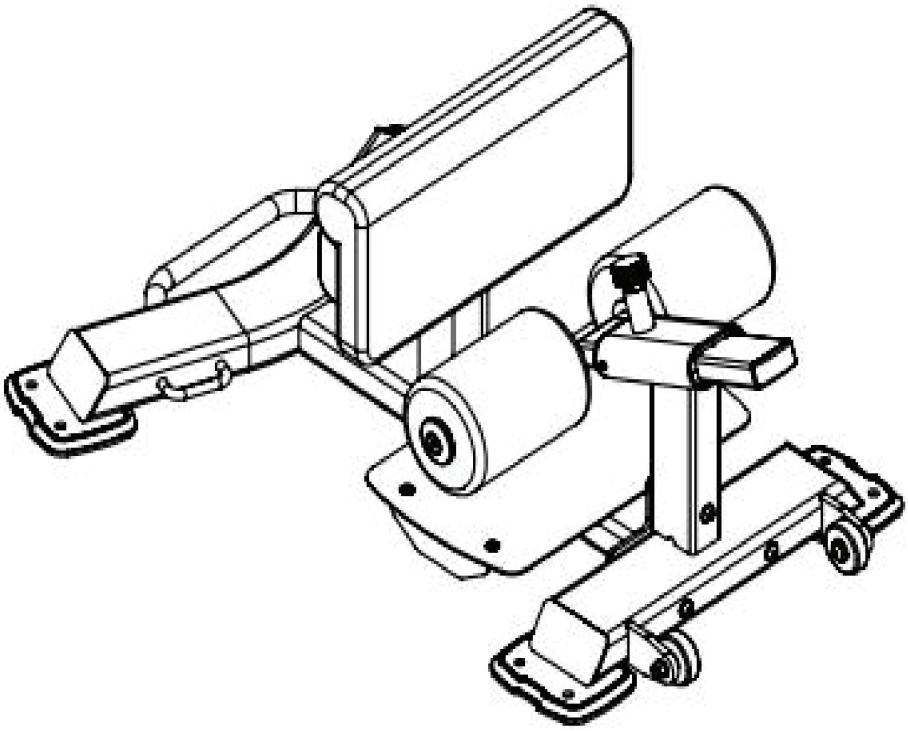

TO OBTAIN THE WARRANTY OF THIS PRODUCT, WE RECOMMEND THAT A QUALIFIED TECHNICIAN CARRIES OUT THE FULL ASSEMBLY.

CAUTION

BEFORE USING THIS EQUIPMENT. READ ALL PRECAUTIONS AND INSTRUCTIONS IN THIS MANUAL KEEP THIS MANUAL FORFUTURE REFERENCE.

IMPORTANT WARNINGS & SAFETY INSTRUCTIONS

PROPER INSTALLATION
The Gym facility shall ensure that all exercise equipment and machines are properly installed, anchored, and secured to the floor or wall in accordance with the manufacturer's instructions and applicable safety standards to prevent tipping, movement, or other hazards.

LIMITATION OF LIABILITY
Evolution Group LLC and its affiliates shall not be liable for any damages, injuries, or losses arising from the improper installation, maintenance, or use of the equipment. The Gym facility agrees to hold harmless and indemnify Evolution Group LLC and its affiliates against any claims, demands, or liabilities resulting from such incidents.

COMPLIANCE WITH INSTRUCTIONS
The Gym facility confirms that it has received and understood the manufacturer's instructions and safety guidelines for the equipment. The Gym facility is responsible for ensuring that its staff and members are aware of and comply with these instructions.

NO WARRANTY FOR MISUSE
Evolution Group LLC and its affiliates do not warrant the equipment's performance or safety in cases of misuse, improper installation, or failure to maintain the equipment as recommended.

PURCHASER INSTRUCTIONS
It is the sole responsibility of the purchaser of products to read, understand, and comply with the this equipment. Use this product only for its intended purpose as described in the owner’s manual. Failure to do so may result in injury or damage . It is recommended that all users be informed of the following information prior to use.

RISK OF INJURY AND ASSUMPTION OF RISK; NO CHILDREN
- Before starting any exercise or conditioning program, you should consult your physician. This is especially important if you are new to exercise or training equipment, inactive, pregnant, or suffer from any illness or mental condition. Using training equipment can result in injury or death, and the purchaser is assuming that risk. This makes understanding the owner’s manual and instructing others particularly important.
- If at any time during exercise you feel faint, dizzy, or experience pain, stop exercising immediately and consult your physician.
- Keep children away from the equipment, and particularly moving parts. If using the product near children or pets, ensure constant supervision to prevent accidents and ensure that there is no ability for the child or pet to get near the moving parts. If authorized by a legal guardian or parent, a child should be under direct and immediate supervision at all times. Under no circumstances should a child younger than 15 years old use the equipment.

SECURE ENVIRONMENT
Skelcore equipment must:
- Be secured to or set up on a solid, level surface to stabilize and eliminate rocking or tipping over during training.
- Be set up with sufficient ventilation to ensure proper operation.

- Be set up with sufficient space around the equipment so that all exercises can be completed safely. It is recommended that there should be at least 1 meter of space around the equipment where access is required to exercise.

INSTALLATION

Risk of Injury:
- Installation of this product involves certain risks, including the risk of injury. Follow the installation instructions carefully, and if you are unsure, seek professional assistance.
- For optimal safety, professional installation is recommended. If you choose to install the product yourself, ensure that you have the necessary skills and tools.
- Before installation, verify that the installation location can support the weight and forces exerted by the product. Consult a professional if needed.

If you encounter difficulties during installation or have any questions, contact the distributor/sales person from which you purchased the equipment from for assistance.

Failure to follow these installation guidelines may result in injury or damage or void your warranty. By installing and using this product, you acknowledge and accept all associated risks. If you have questions, please contact our customer support.

USER WEIGHT LIMITATIONS

This product has a maximum weight limit. Do not exceed the specified weight capacity. Doing so may compromise the stability of the equipment and result in injury. This machine has a max. user weight of ***200 KG / 440 LB***

INSPECTION AND CLEANING

- Before any use, examine all accessories approved for use with the Skelcore equipment for damage or wear.
- Do not use or permit the use of any equipment that is damaged or has worn or broken parts. For all Skelcore equipment, use only replacement parts supplied by Skelcore.
- Always make sure that all nuts and bolts are tightened prior to each use.
- Maintain labels and nameplates – do not remove labels for any reason. They contain important information.
- Equipment maintenance – preventative maintenance is the key to smooth operating equipment. Please ensure that you follow our maintenance tips to ensure the continued correct function of your Skelcore equipment.
- If there are damages to small parts, please stop using the equipment at once and contact the purchasing company or agency for replacements. Install the new small parts properly and make sure the connected joints and working parts are fastened, avoiding danger during use.
- Should your Skelcore equipment appear damaged or worn, do not attempt to use or repair the equipment yourself.
- Do not use caustic cleansers to clean and/or wipe it.

OPERATING PROCEDURES AND WARNINGS

- It is the purchaser’s responsibility to instruct all users as to the proper operating procedures of all

Skelcore equipment.
- Do not wear loose-fitting clothing or jewelry when using the equipment. It is also recommended that users tie up long hair to avoid contact with moving parts.
- Ensure that anyone not using the equipment stays clear of the user, accessories, and moving parts while the machine is in operation.
- To avoid muscular pain and strain, begin each workout by stretching and warming up, and end each session by cooling down and stretching.
- If the user experiences any injury during use, they should immediately stop using the product and seek medical attention.

PROPER INSTALLATION

The Gym facility shall ensure that all exercise equipment and machines are properly installed, anchored, and secured to the floor or wall in accordance with the manufacturer's instructions and applicable safety standards to prevent tipping, movement, or other hazards.

LIMITATION OF LIABILITY

Evolution Group LLC and its affiliates shall not be liable for any damages, injuries, or losses arising from the improper installation, maintenance, or use of the equipment. The Gym facility agrees to hold harmless and indemnify Evolution Group LLC and its affiliates against any claims, demands, or liabilities resulting from such incidents.

SAVE THIS INSTRUCTION MANUAL FOR FUTURE USE AND REFERENCE.

PRE-ASSEMBLY LIST

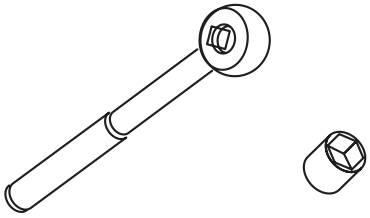

Ratchet wrench and socket

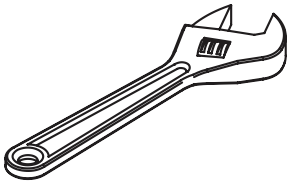

Adjustable wrench

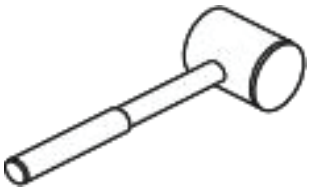

Rubber Mallet

Hex key wrench set

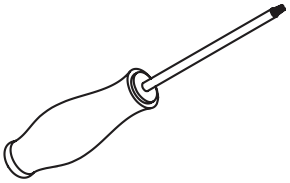

Phillips screwdriver

EXPLODED DIAGRAM & ASSEMBLY LIST

OVERALL:

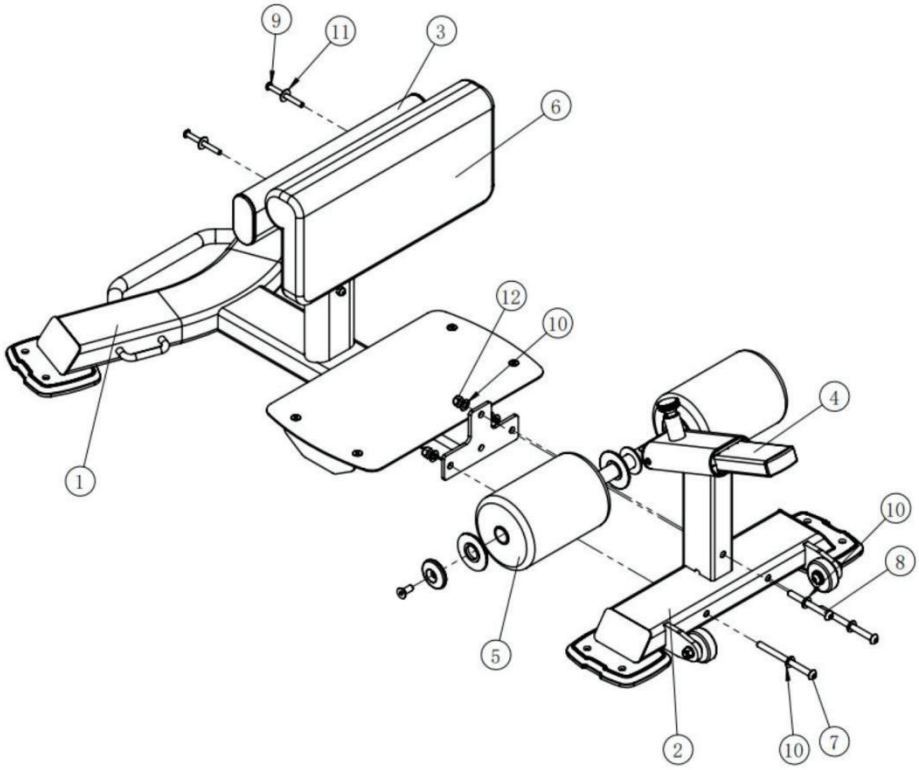

Item No.	Description	QTY
1	Rear Base Frame ASSY	1
2	Front Base Frame ASSY	1
3	Supporting Frame ASSY	1
4	Roller Frame ASSY	1
5	Foam Roller	2
6	Leg Pad	1
7	Button head cap screw M10*130	2
8	Button head cap screw M10*95	1
9	Button head cap screw M8*75	2
10	Flat washer Φ11*Φ20*2	6
11	Flat washer Φ9*Φ22*1.6	2
12	Nylon lock nut M10	3

EXPLODED DIAGRAM & ASSEMBLY LIST

REAR BASE FRAME:

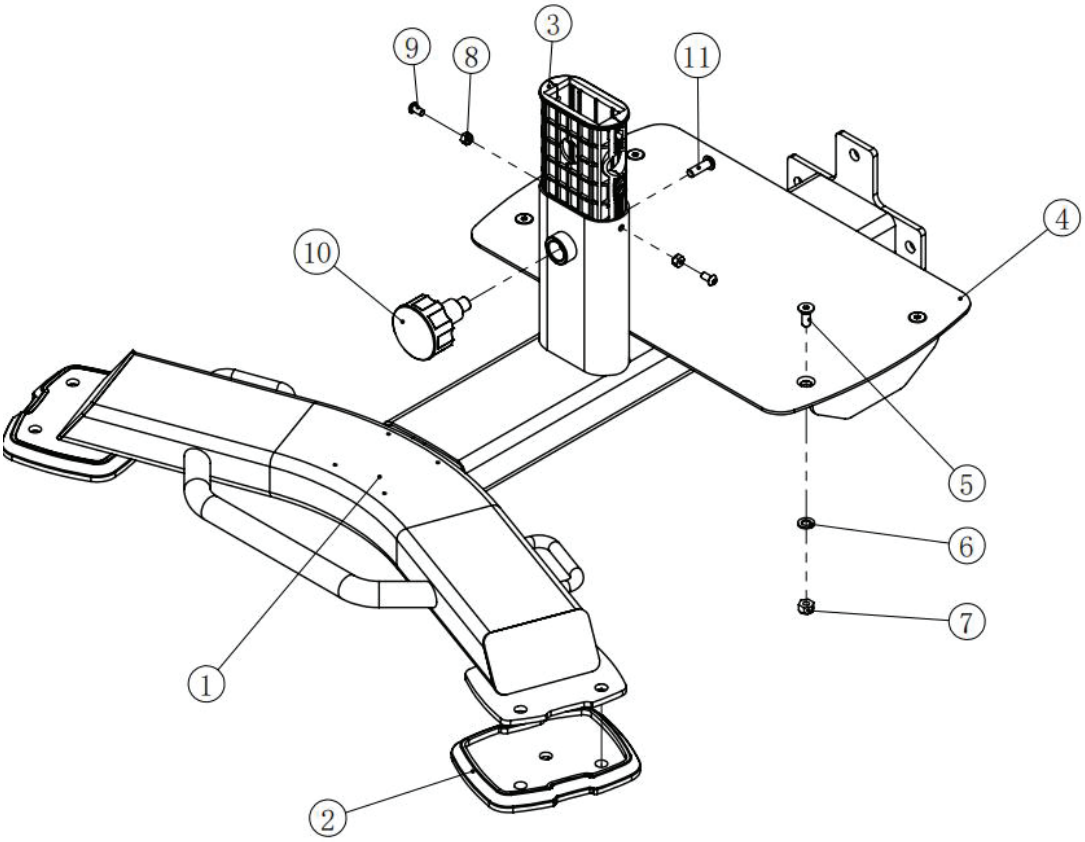

Item No.	Description	QTY
1.1	Rear Base Frame	1
1.2	Foot Cover	2
1.3	Hollow Sleeve	2
1.4	Footplate	1
1.5	Flat Head Cap Screw M8*25	4
1.6	Flat Washer φ16*φ9*2	4
1.7	Nylon Lock Nut M8	4
1.8	Nylon Lock Nut M6	2
1.9	Button Head Cap Screw M6*12	2
1.10	Pull Pin Knob	1
1.11	Button Head Cap Screw M8*25	1

EXPLODED DIAGRAM & ASSEMBLY LIST

FRONT BASE FRAME:

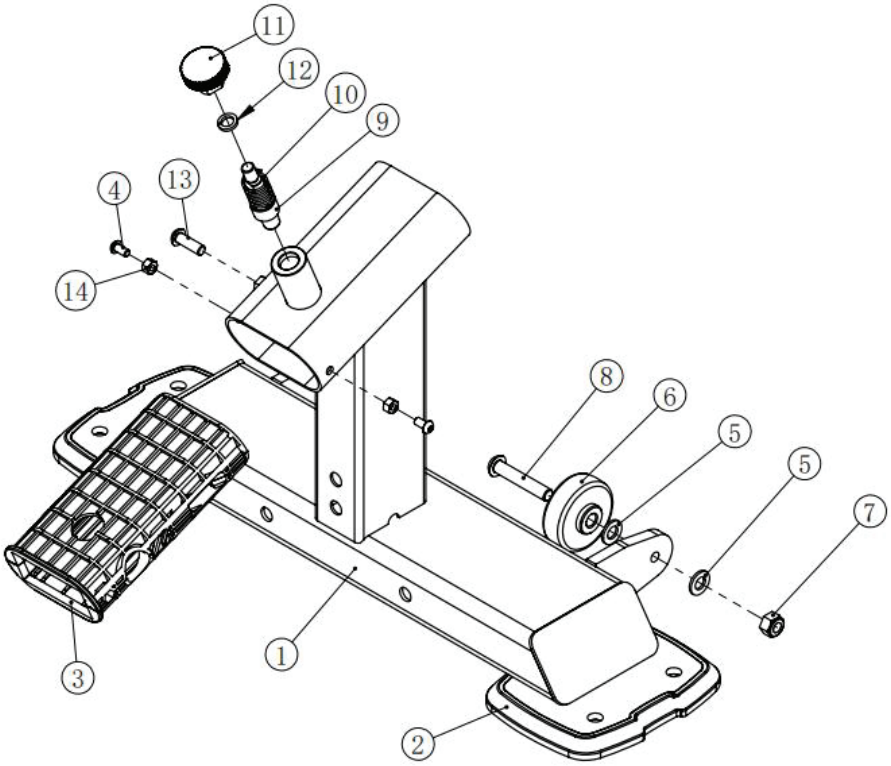

Item No.	Description	QTY
2.1	Front Base Frame	1
2.2	Foot Cover	2
2.3	Hollow Sleeve	2
2.4	Button Head Cap Screw M6*12	2
2.5	Flat Washer φ16*φ9*2	4
2.6	Nylon Roller	2
2.7	Nylon Lock Nut M10	2
2.8	Nylon Lock Nut M6	2
2.9	Button Head Cap Screw M10*55	1
2.10	Spring	1
2.11	End Plug	1
2.12	Spring Washer φ10	1
2.13	Button Head Cap Screw M8*25	1
2.14	Hex Head Bolt M6	2

EXPLODED DIAGRAM & ASSEMBLY LIST

SUPPORTING FRAME:

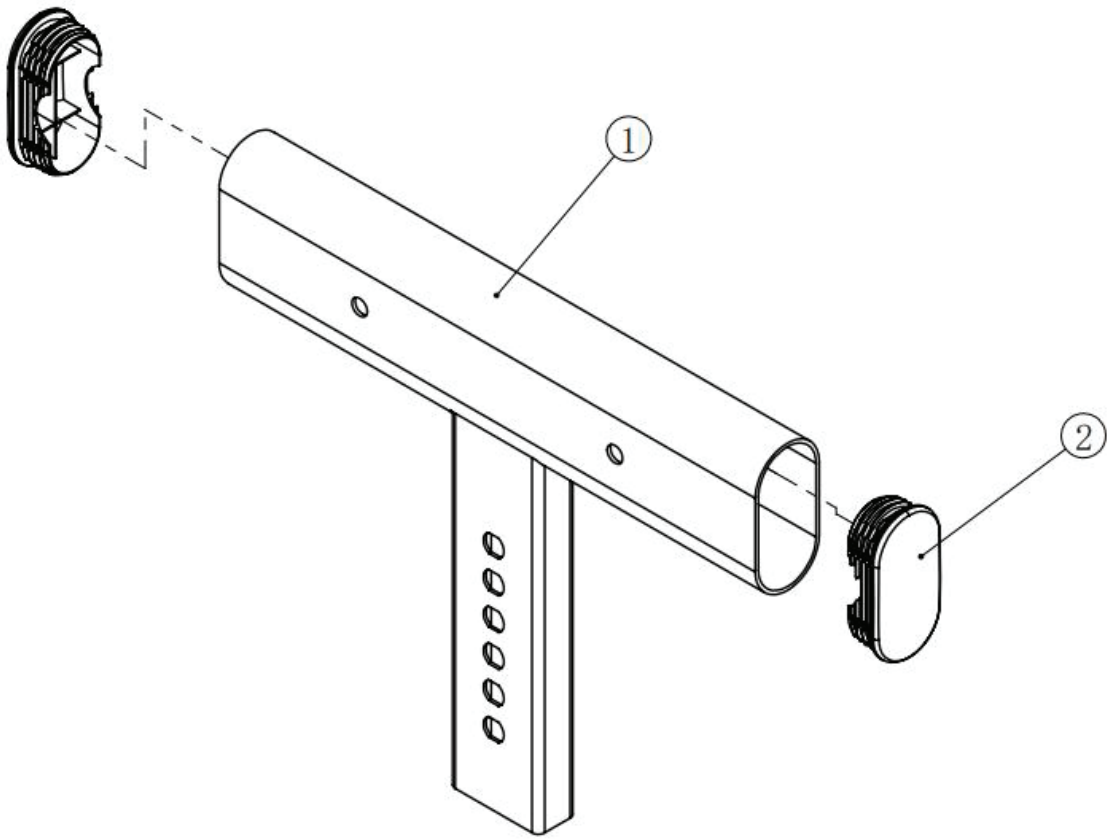

Item No.	Description	QTY
3.1	Supporting Frame	1
3.2	End Cap 50*110*3	2

EXPLODED DIAGRAM & ASSEMBLY LIST

ROLLER FRAME:

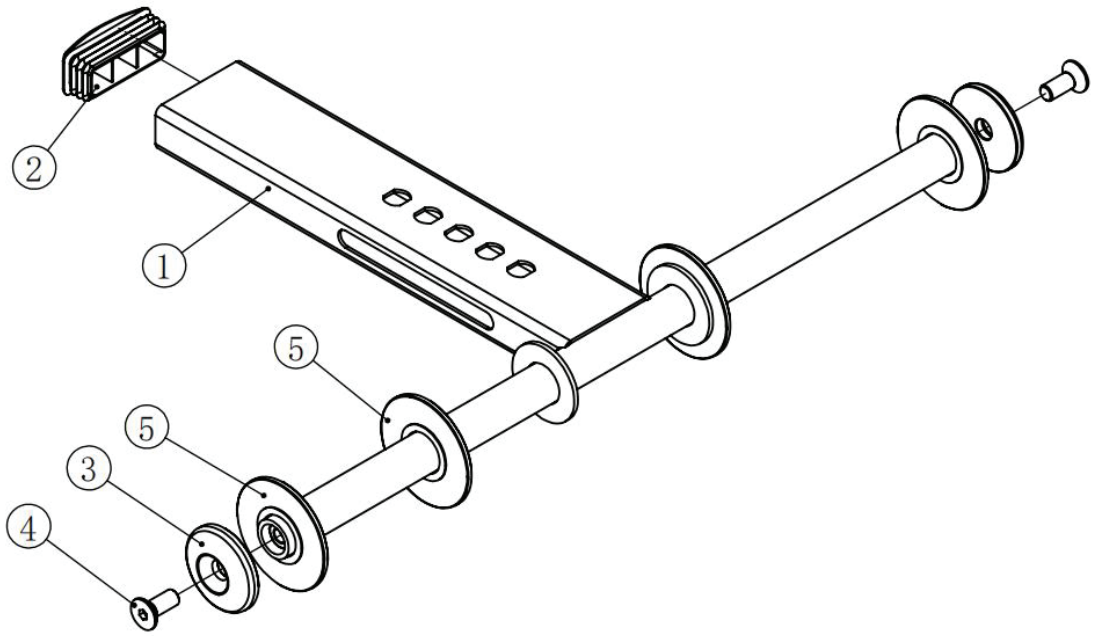

Item No.	Description	QTY
4.1	Supporting Frame	1
4.2	End Plug 50*110*3	1
4.3	End Capφ54	2
4.4	Flat Head Cap Screw M10*25	2
4.5	Flat Washer	4

ASSEMBLY STEPS

STEP 1:

Attach Rear Base Frame ASSY (#1) and Front Base Frame ASSY (#2) together, using:

two BHCS M10*130 (#7)

one BHCS M10*95 (#8)

six Flat Washer φ20*φ11*1.5 (#10)

three M10 Nylon lock nut (#12)

Note: Hand tighten bolts and nylon lock nuts.

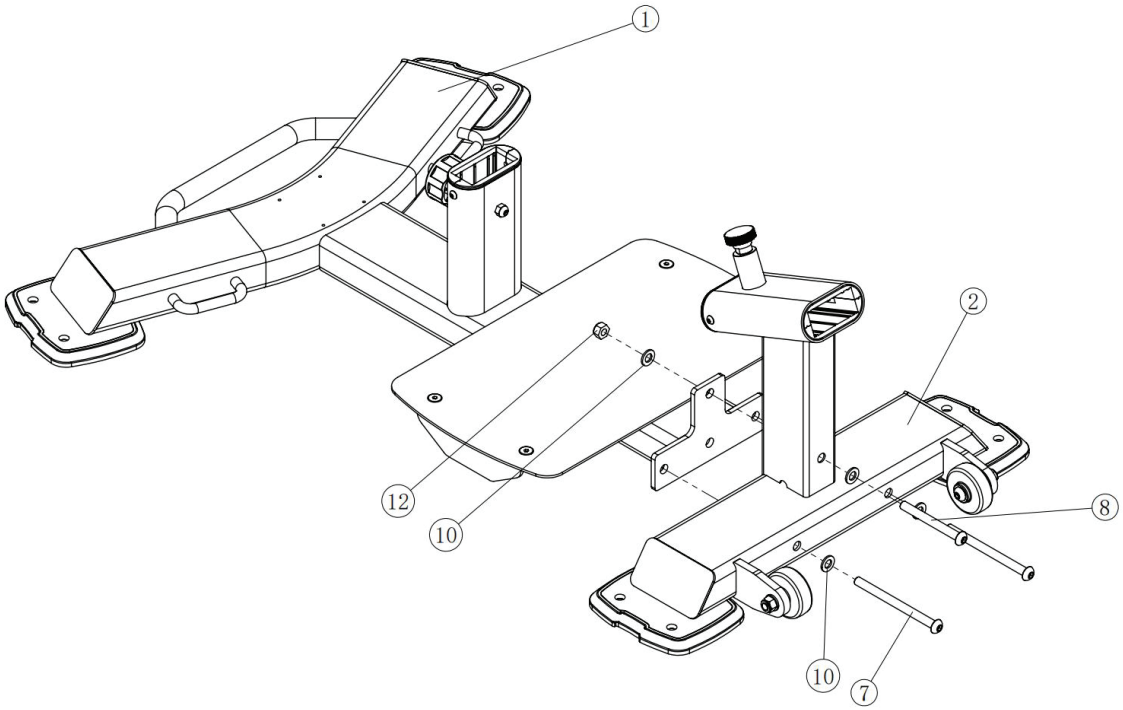

ASSEMBLY STEPS

STEP 2:

Disassemble the following parts at first, then attach Roller frame ASSY (#4) and Front Base Frame ASSY (#2) together again with these parts:

one Pull Pin Knob

one BHCS M8*25

Note: Hands tighten bolts and nylon lock nuts

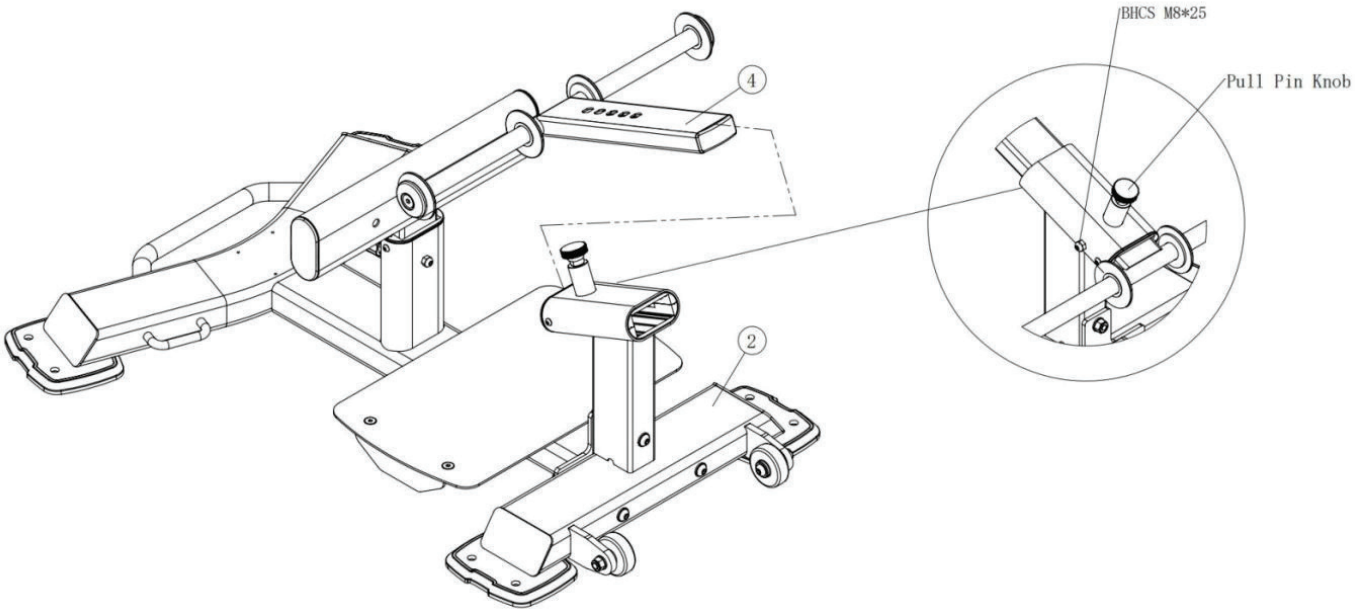

ASSEMBLY STEPS

STEP 3:

Disassemble the following parts first, then attach Supporting frame ASSY (#3) and Rear Base Frame ASSY (#1) together again with these parts:

one Pull Pin Knob

one BHCS

Note: Hand tighten bolts and nylon lock nuts.

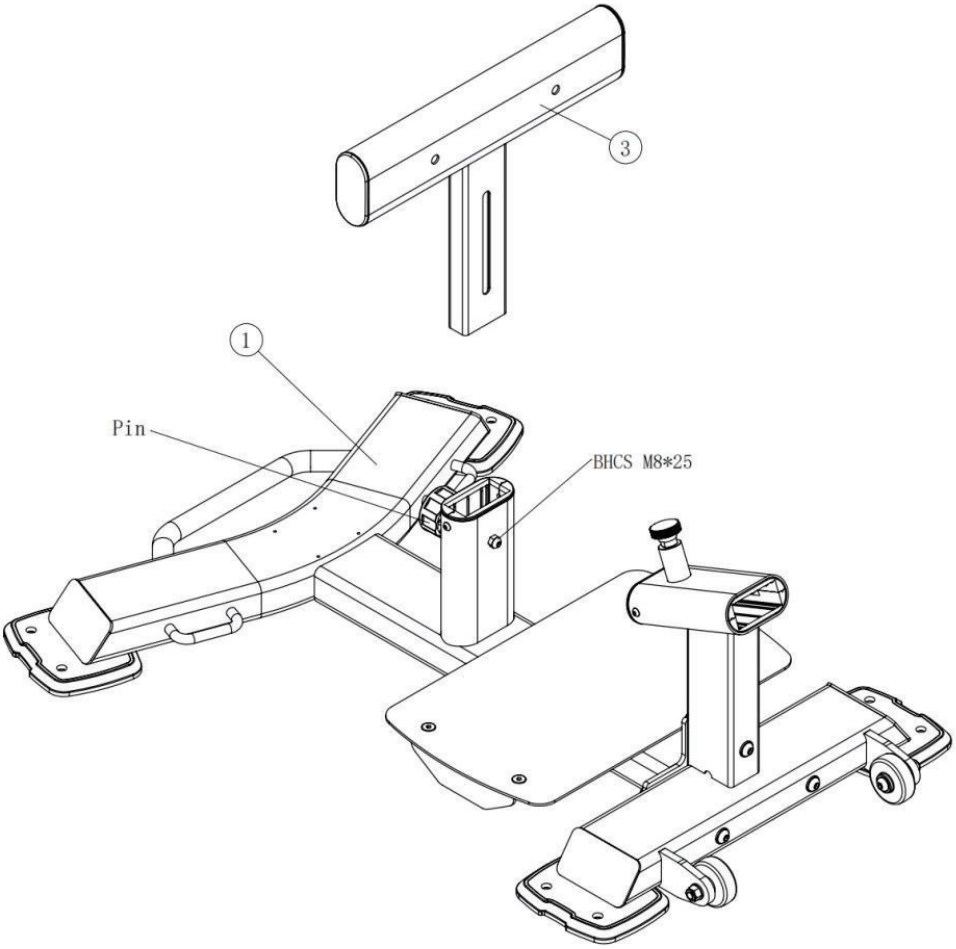

ASSEMBLY STEPS

STEP 4:

Attach Leg pad (#6) and Supporting Frame ASSY (#3) together, using:

two BHCS M8*75 (#9)

two Flat Washer φ9*φ22*1.6 (#11)

Note: Hand tighten bolts and nylon lock nuts.

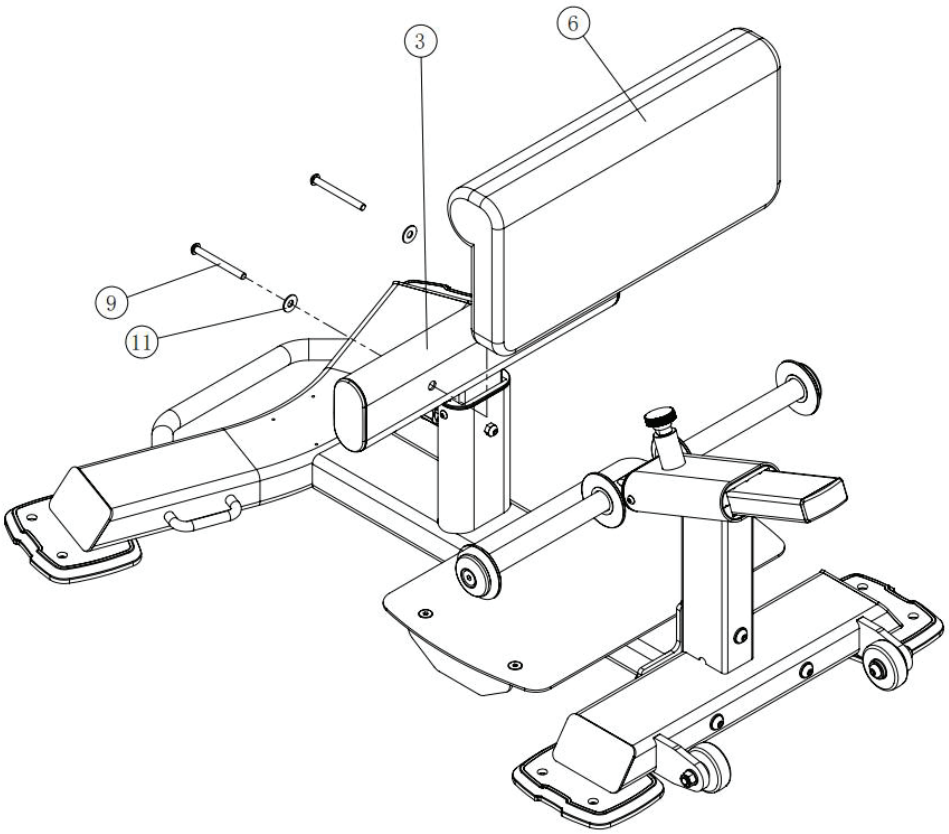

STEP 5:

Disassemble the following parts at first, then attach Roller frame ASSY (#4) and two Foam Roller (#5) together again with these parts:

one Flat Washer

one End Cap

one FHCS M10*25

Note: Wrench tighten bolts and nylon lock nuts.

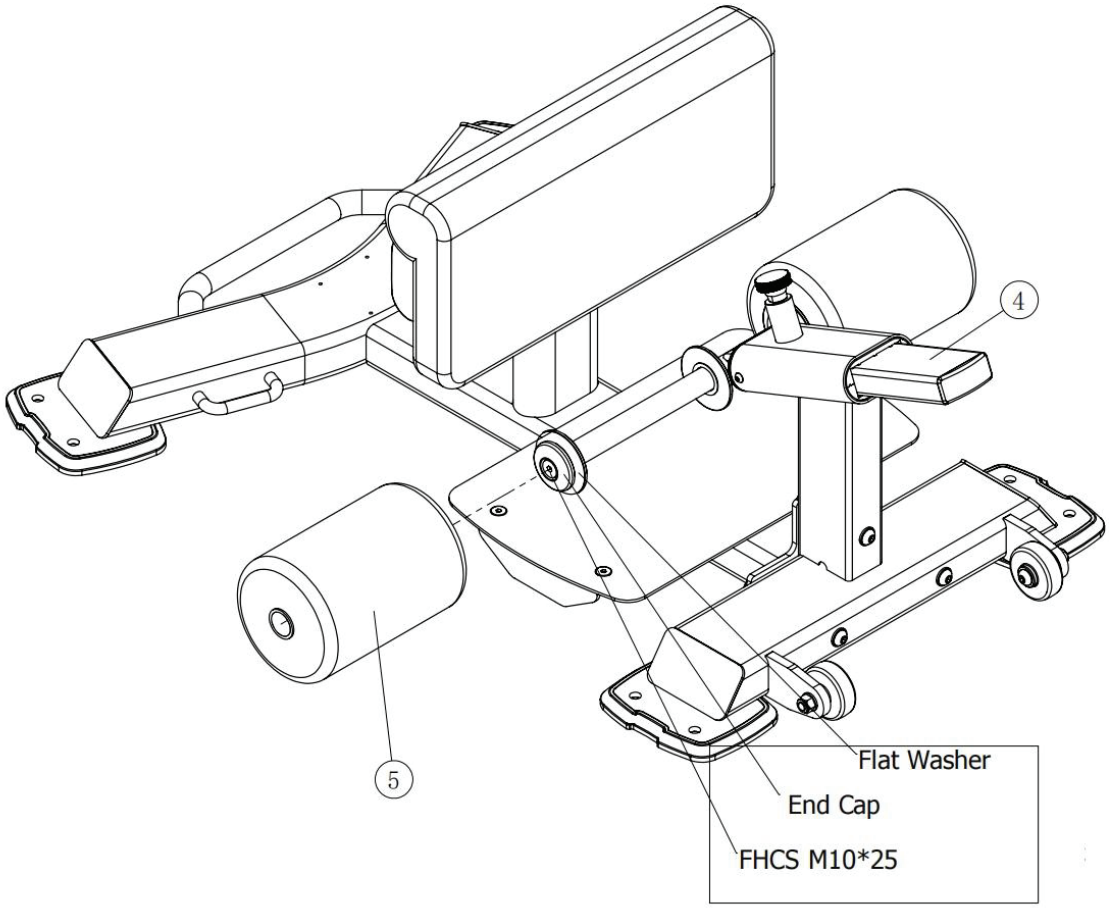

MAINTENANCE

MAINTENANCE SCHEDULE:

ROUTINE	COMMERCIAL MAINTENANCE	HOME MAINTENANCE	LATEST DATE ENTRY						
Inspect; Links, Pull Pins, Snap Locks, Swivels, Weight Stack Pins	DAILY	WEEKLY							
Clean; Upholstery	DAILY	WEEKLY							
Inspect; Cables or Belts and their tension	DAILY	WEEKLY							
Inspect; Accessory Bars, and Handles	WEEKLY	3 MONTHS							
Inspect; All Decals	WEEKLY	3 MONTHS							
Inspect; All Nuts and Bolts, tighten if needed	WEEKLY	3 MONTHS							
Inspect; Anti-Skid Surface	WEEKLY	3 MONTHS							
Clean & lubricate; Guide Rods with a Teflon (PTFE) based lubricant (Super lube)	MONTHLY	3 MONTHS							
Lubricate; Seat Sleeves, Turcite Bushings, Linear Bearing	MONTHLY	3 MONTHS							
Clean and Wax; All Glossy Finishes	6 MONTHS	YEARLY							
Repack with Grease; Linear Bearings	6 MONTHS	YEARLY							
Replace; Cables, Belts and Connecting Parts	YEARLY	3 YEARS							

MAINTENANCE

GENERAL MAINTENANCE INFORMATION:

Links, Pull-Pins, Snap Hooks, Swivels, Weight Stack Pins:
*Check all pieces for signs of visible wear or damage.
*Check springs in snap hooks and pull-pins for proper tension and alignment.
*If the spring sticks or has lost its rigidity, replace it immediately.

Upholstery:
*To ensure prolonged upholstery life and proper hygiene, all upholstered pads should be wiped down with a damp cloth after every workout.
*Periodically take the time to use a mild soap or an approved vinyl upholstery cleaner to Deter the onset of cracking or drying. Avoid using any abrasive cleaners or cleaners not intended for use on vinyl.
*Replace ripped or warn upholstery immediately.
*Keep sharp or pointed objects clear of all upholstery.

Decals:
*Inspect and familiarize yourself with any safety warnings or other user information posted on each decal.

Nuts and Bolts:
*Inspect all nuts and bolts for any loosening and tighten if needed.
*Go through a re-tightening sequence periodically to ensure that all hardware is tensioned proper.

Anti-Skid Surfaces:
*These surfaces are designed to supply secure footing and need to be replaced if they appear worn or become slippery.

Belts and Cables:
*We use only high-quality belt and mil-spec cables.
*Visually inspect the belts and cables for fraying, cracking, peeling or discoloration.
*While the machine is not in use, carefully run your fingers along the belt or cable to feel for thinning or bulging areas.
*Replace belts and cables immediately at the first signs of damage or wear. Do not use equipment until belts or cables have been replaced.

Belt and Cable Tension:
*Referring to the Owner's Manual, when belts or cables are used check all bolts attachments to be sure they are properly attached.
*Check slack in cables and re-adjust cable tension if needed.

Seat Sleeves, Guide Rods:
*Wipe down adjusting tubes with a dust free rag before applying lubricant.
*Lubricate seat sleeves and Guide Rods with a Silicon or Teflon based lubricant spray.

Linear Bearings:
*Referring to the Owner's Manual carefully disassemble the bearing from its housing and place a finger full of light grease (lithium, super lube, etc.) into the inside of the bearing. Using your finger, press the grease into the ball-bearings and their tracks. Repeat until the ball-bearing tracks are full of grease. Insert the shaft back into the bearing and wipe off excess grease.

PLEASE KEEP THIS FOR YOUR RECORDS

WARRANTY

For a period of either 120 days or 24 months after the purchase date (the “Warranty Period”), a warranty will apply on moving parts, pully's, cables, buttons, upholstery, hydraulic seats and cables for a period of 120 days, with the balance of the machine being a 24 month warranty. Skelcore warrants that the equipment for materials and workmanship such that, when installed and used in accordance with the owner’s manual, will operate for its intended purpose. The warranty applies to equipment installed in air conditioned and temperature controlled environments and will be null and void if used outdoors or in an environment with no air conditioning. Skelcore will, at its expense and as its sole obligation and your exclusive remedy for any breach of this warranty, repair or replace the equipment or any parts, in its discretion, provided that such malfunction or defect is reported to Skelcore by you in writing during the Warranty Period and that you provide all information that may be necessary or requested to assist Skelcore in resolving the malfunction. If Skelcore determines that it is unable to repair the malfunction or replace the equipment, Skelcore or its authorized reseller may refund you the fees you actually paid for the defective equipment, in which case you agree to immediately cease using and to destroy, throw out, or otherwise take steps to ensure no one can use the equipment ever again.

If there are any problems or malfunctions with the Skelcore equipment you purchased, please contact your sales manager promptly. They will help you identify the cause of the problem and assist you in resolving it. If the issue involves parts that cannot be quickly addressed, the company’s professional after-sales service personnel will provide specialized support.

COST OF REPAIRS

UNDER WARRANTY

Any items still under warranty will be repaired free of charge, if the repair complies with the terms and conditions of the warranty (refer to the “warranties” section in this manual). Any items that need to be repaired that are not covered under the warranty will be at your expense. A quote for the repair or replacement of these items will be provided to you for approval prior to any repairs being conducted.

OUT OF WARRANTY

Any items that need to be repaired once the warranty has expired will be at your expense, including call-out fees. A quote for the repair or replacement of these items will be provided to you for approval prior to any repairs being conducted.
Save this instruction manual for future use and reference.

SAVE THIS INSTRUCTIONAL MANUAL FOR FUTURE USE AND REFERENCE.

WARRANTY

To maintain your warranty, please complete the form below upon receiving your machine and email it back to the representative who sold you the goods.

Failure to do so will result in the loss of warranty.

SKELCORE ATTACH RECEIPT

CLIENT DETAILS

- **NAME:**
- **EMAIL:**
- **CELL:**
- **TEL(H):**
- **TEL(W):**
- **FAX:**
- **ADDRESS:**

PRODUCT DETAILS

- **DATE OF PURCHASE:**
- **SERIAL NUMBER:**
- **TILL SLIP NUMBER:**
- **DESCRIPTION OF PURCHASE:**

Signature: _____

Date: _____