SKELCORE

SKELCORE CURVED RUNNER 3.0

SK-CRUN3.0

USER MANUAL

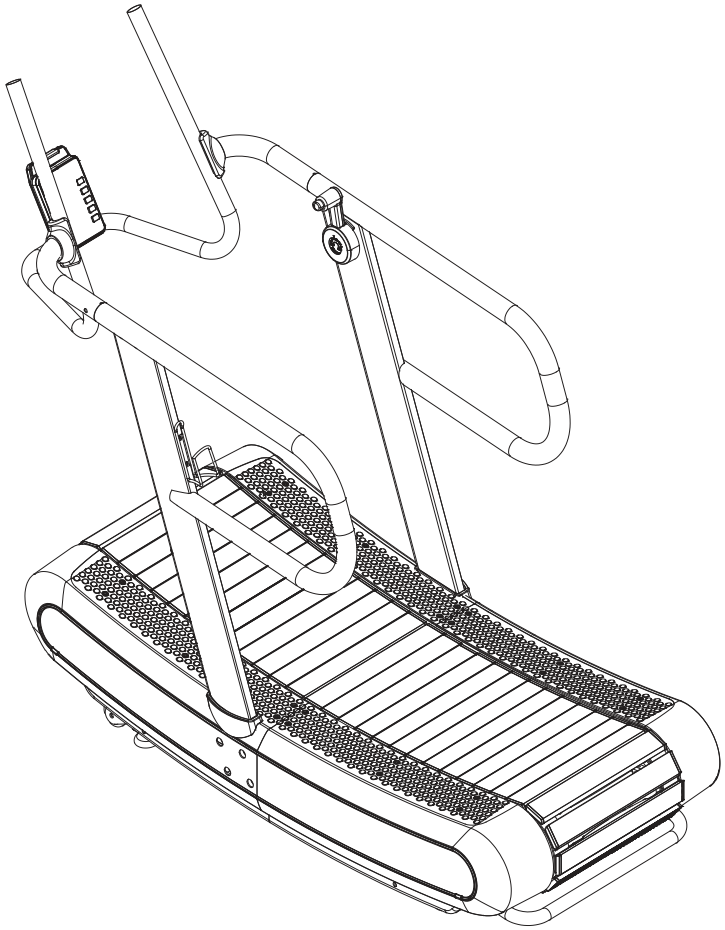

TO OBTAIN THE WARRANTY OF THIS PRODUCT, WE RECOMMEND THAT A QUALIFIED TECHNICIAN CARRIES OUT THE FULL ASSEMBLY.

CAUTION

BEFORE USING THIS EQUIPMENT. READ ALL PRECAUTIONS AND INSTRUCTIONS IN THIS MANUAL KEEP THIS MANUAL FORFUTURE REFERENCE.

IMPORTANT WARNINGS & SAFETY INSTRUCTIONS

PROPER INSTALLATION
The Gym facility shall ensure that all exercise equipment and machines are properly installed, anchored, and secured to the floor or wall in accordance with the manufacturer's instructions and applicable safety standards to prevent tipping, movement, or other hazards.

LIMITATION OF LIABILITY
Evolution Group LLC and its affiliates shall not be liable for any damages, injuries, or losses arising from the improper installation, maintenance, or use of the equipment. The Gym facility agrees to hold harmless and indemnify Evolution Group LLC and its affiliates against any claims, demands, or liabilities resulting from such incidents.

COMPLIANCE WITH INSTRUCTIONS
The Gym facility confirms that it has received and understood the manufacturer's instructions and safety guidelines for the equipment. The Gym facility is responsible for ensuring that its staff and members are aware of and comply with these instructions.

NO WARRANTY FOR MISUSE
Evolution Group LLC and its affiliates do not warrant the equipment's performance or safety in cases of misuse, improper installation, or failure to maintain the equipment as recommended.

PURCHASER INSTRUCTIONS
It is the sole responsibility of the purchaser of products to read, understand, and comply with the this equipment. Use this product only for its intended purpose as described in the owner’s manual. Failure to do so may result in injury or damage . It is recommended that all users be informed of the following information prior to use.

RISK OF INJURY AND ASSUMPTION OF RISK; NO CHILDREN
- Before starting any exercise or conditioning program, you should consult your physician. This is especially important if you are new to exercise or training equipment, inactive, pregnant, or suffer from any illness or mental condition. Using training equipment can result in injury or death, and the purchaser is assuming that risk. This makes understanding the owner’s manual and instructing others particularly important.
- If at any time during exercise you feel faint, dizzy, or experience pain, stop exercising immediately and consult your physician.
- Keep children away from the equipment, and particularly moving parts. If using the product near children or pets, ensure constant supervision to prevent accidents and ensure that there is no ability for the child or pet to get near the moving parts. If authorized by a legal guardian or parent, a child should be under direct and immediate supervision at all times. Under no circumstances should a child younger than 15 years old use the equipment.

SECURE ENVIRONMENT
Skelcore equipment must:
- Be secured to or set up on a solid, level surface to stabilize and eliminate rocking or tipping over during training.
- Be set up with sufficient ventilation to ensure proper operation.

- Be set up with sufficient space around the equipment so that all exercises can be completed safely. It is recommended that there should be at least 1 meter of space around the equipment where access is required to exercise.

INSTALLATION

Risk of Injury:
- Installation of this product involves certain risks, including the risk of injury. Follow the installation instructions carefully, and if you are unsure, seek professional assistance.
- For optimal safety, professional installation is recommended. If you choose to install the product yourself, ensure that you have the necessary skills and tools.
- Before installation, verify that the installation location can support the weight and forces exerted by the product. Consult a professional if needed.

If you encounter difficulties during installation or have any questions, contact the distributor/sales person from which you purchased the equipment from for assistance.

Failure to follow these installation guidelines may result in injury or damage or void your warranty. By installing and using this product, you acknowledge and accept all associated risks. If you have questions, please contact our customer support.

USER WEIGHT LIMITATIONS

This product has a maximum weight limit. Do not exceed the specified weight capacity. Doing so may compromise the stability of the equipment and result in injury. This machine has a max. user weight of ***200 KG / 440 LB***

INSPECTION AND CLEANING

- Before any use, examine all accessories approved for use with the Skelcore equipment for damage or wear.
- Do not use or permit the use of any equipment that is damaged or has worn or broken parts. For all Skelcore equipment, use only replacement parts supplied by Skelcore.
- Always make sure that all nuts and bolts are tightened prior to each use.
- Maintain labels and nameplates – do not remove labels for any reason. They contain important information.
- Equipment maintenance – preventative maintenance is the key to smooth operating equipment. Please ensure that you follow our maintenance tips to ensure the continued correct function of your Skelcore equipment.
- If there are damages to small parts, please stop using the equipment at once and contact the purchasing company or agency for replacements. Install the new small parts properly and make sure the connected joints and working parts are fastened, avoiding danger during use.
- Should your Skelcore equipment appear damaged or worn, do not attempt to use or repair the equipment yourself.
- Do not use caustic cleansers to clean and/or wipe it.

OPERATING PROCEDURES AND WARNINGS

- It is the purchaser’s responsibility to instruct all users as to the proper operating procedures of all

Skelcore equipment.
- Do not wear loose-fitting clothing or jewelry when using the equipment. It is also recommended that users tie up long hair to avoid contact with moving parts.
- Ensure that anyone not using the equipment stays clear of the user, accessories, and moving parts while the machine is in operation.
- To avoid muscular pain and strain, begin each workout by stretching and warming up, and end each session by cooling down and stretching.
- If the user experiences any injury during use, they should immediately stop using the product and seek medical attention.

PROPER INSTALLATION
The Gym facility shall ensure that all exercise equipment and machines are properly installed, anchored, and secured to the floor or wall in accordance with the manufacturer's instructions and applicable safety standards to prevent tipping, movement, or other hazards.

LIMITATION OF LIABILITY
Evolution Group LLC and its affiliates shall not be liable for any damages, injuries, or losses arising from the improper installation, maintenance, or use of the equipment. The Gym facility agrees to hold harmless and indemnify Evolution Group LLC and its affiliates against any claims, demands, or liabilities resulting from such incidents.

SAVE THIS INSTRUCTION MANUAL FOR FUTURE USE AND REFERENCE.

PRE ASSEMBLY LIST

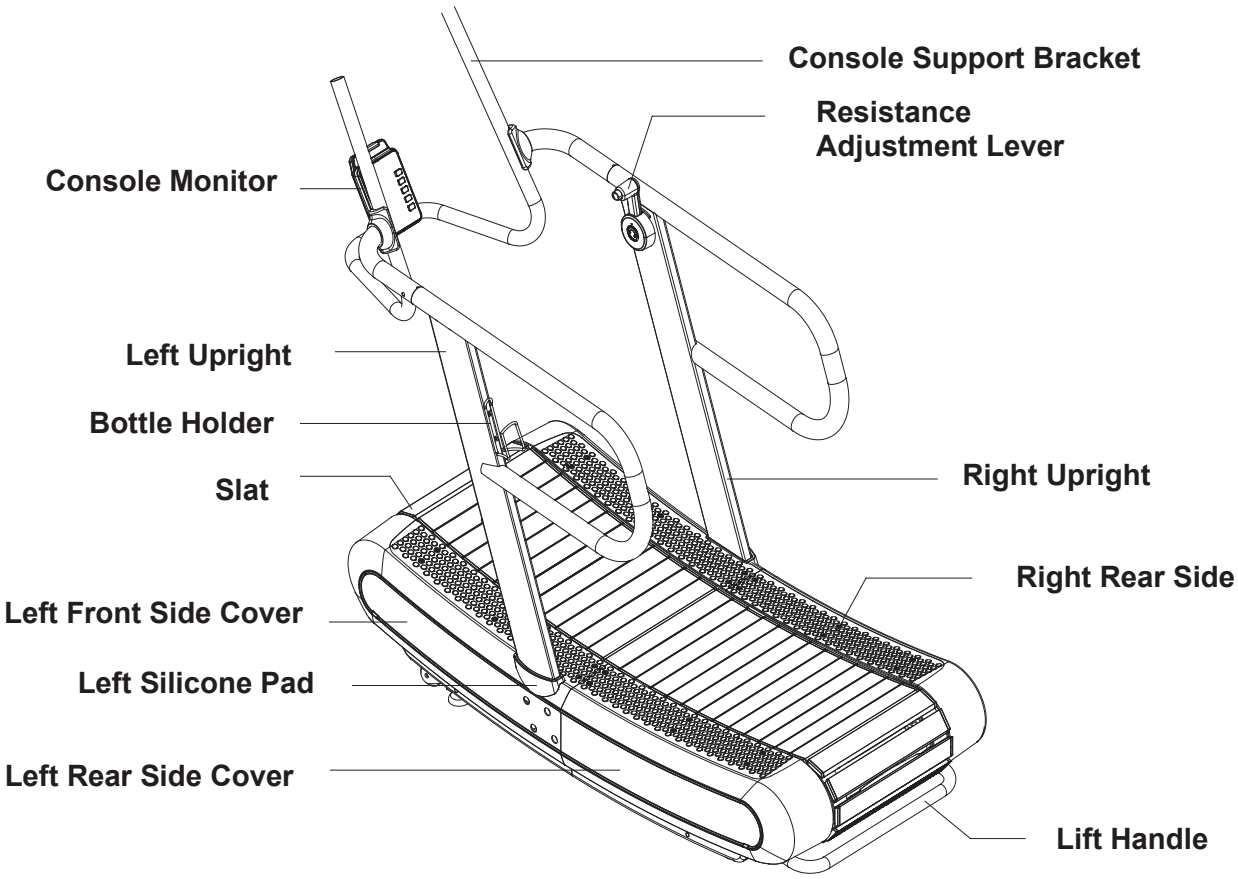

Part Drawing	Part No.	Description	Qty
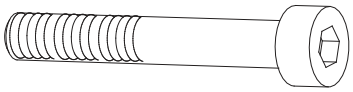	102	Socket Head Cap Screw M10X45mm	8
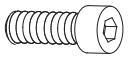	81	Socket Head Cap Screw M6X16mm	4
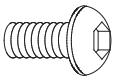	65	Button Head Cap Screw M8X15mm	6
	66	Spring Washer M8	6
	67	Arc Washer M8	6
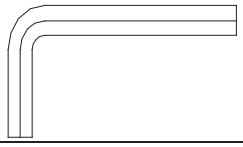	99	Allen Wrench 8mm	1

PRE ASSEMBLY LIST

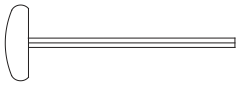	97	Allen Wrench 5mm	1
	98	Allen Wrench 6mm	1
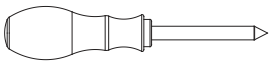	100	Screw Driver	1
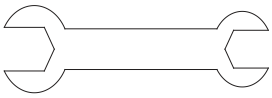	103	Open End Wrench #17-#19	1
	110	Philips Pan Head Screw M5x12	2

ASSEMBLY LIST

Part No.	Description	Qty
1	Main Frame	1
2	Left Foot Support	1
3	Right Foot Support	1
4	Left End Cap Cover	1
5	Right End Cap Cover	1
6	Roller Guide Bracket	2
8	Roller Guide Connection Bracket	3
9	Left Upright	1
10	Right Upright	1
11	Left Front Handrail Connection Bracket	1
12	Right Front Handrail Connection Bracket	1
13	Console Support Bracket	1
14	Lift Handle	1
15	Magnetic Control Mounting Bracket	1
16	Magnetic Control Adjustment Bracket	1
17	Magnet Holder	1
18	Transmission Threaded Tube	5
19	Side Cover Fixing Plate	2
20	Chain Fixing Plate	120
21	Rear Roller Fixing Plate	2
22	Spacer 608	98
23	Aluminum Guide Roller Spacer	12
24	Positioning Sleeve	2
25	Sensor Mounting Bracket	1
26	Console Monitor	1
27	Upper Section Sensor Wire	2
28	Middle Section Sensor Wire	2
29	Lower Section Sensor Wire	1
30	Rod-type Sensor	1

ASSEMBLY LIST

Part No.	Description	Qty
31	Sensor Fixing Plate	1
32	Aluminum Grounding Wire	1
33	Slat	60
34	Slat Drive Belt	2
35	Front Roller	1
36	Bearing 6205 Holder	2
37	Bearing 6205	2
38	Flat Connection Pin	1
39	C-Clip for Φ25 Shaft	6
40	Belt Pulley	1
41	Rear Roller Set	1
42	Bearing 608-2L	124
43	Aluminum Gulde Roller	12
44	Magnetic Control Belt Pulley	1
45	Bearing 6002	1
46	One-way Bearing 6203	1
47	Aluminum Disc	1
48	Magnet	8
49	Drive Belt 390J8	1
50	Left Front Side Cover	1
51	Right Front Side Cover	1
52	Left Rear Side Cover	1
53	Right Rear Side Cover	1
54	Left Silicone Pad	1
55	Right Silicone Pad	1
56	Resistance Adjustment Lever	1
57	Lower Section Cable of Resistance Adjustment	1
58	Round Inner Cap Φ25	8
59	Feet Pad	120
60	Front Transport Wheel	2
61	Adjustable Foot Pad	4

ASSEMBLY LIST

Part No.	Description	Qty
62	Decoration Strip	2
63	Round Inner Cap Φ38	2
64	Front Decorative Cover	2
65	Button Head Cap Screw M8X15mm	6
66	Spring Washer M8	164
67	Arc Washer M8	6
68	Socket Head Cap Screw M8X15mm	42
69	Flat Washer M8	52
70	Socket Head Cap Screw M8X35mm	6
71	Socket Head Cap Screw M8X45mm	98
72	Nylon Nut M8	113
73	Socket Head Cap Screw M8X50mm	12
74	Socket Head Cap Screw M8X60mm	2
75	Socket Head Cap Screw M8X65mm	2
76	Hex Head Bolt M8X30mm	2
77	Hex Nut M8	2
78	Hex Head Bolt M16X40mm	4
79	Spring Washer M16	4
80	Hex Shoulder Nut M16	4
81	Socket Head Cap Screw M6X16mm	6
82	Phillips Pan Head Screw M5X16mm	240
83	Spring Washer M5	240
84	Socket Head Cap Screw M5X12mm	3
85	Extension Spring	1
86	Phillips Rounded Washer Head Screw M4X10mm	3
87	Cage Nut M5	20
88	Phillips Flat Head Screw M5X30mm	24
89	Phillips Rounded Washer Head Screw M5X16mm	1
90	Phillips Pan Head Self-Tapping Screw ST4.2X16mm	12
91	Phillips Pan Head Self-Drilling Screw ST4.2X19mm	8
94	C Ring Φ22	12

ASSEMBLY LIST

Part No.	Description	Qty
95	C Ring of Shaft Φ15	1
96	Phillips Truss Head Screw M5X10mm	4
97	Allen Wrench 5mm	1
98	Allen Wrench 6mm	1
99	Allen Wrench 8mm	1
100	Screw Driver	1
101	Phillips Rounded Washer Head Screw M5X12mm	1
102	Socket Head Cap Screw M10X45mm	8
103	Open End Wrench #17-#19	1
104	Roller Spacer	4
105	Positioning Nut	6
106	LED Light Cover	2
107	EVA Pad	2
108	Rubber Pad	2
109	Bottle Holder	1
110	Philips Pan Head Screw M5X12mm	2
111	Oil-Filled Roller Bearing	4
135	PU Roller Spacer	2

EXPLODED DIAGRAM

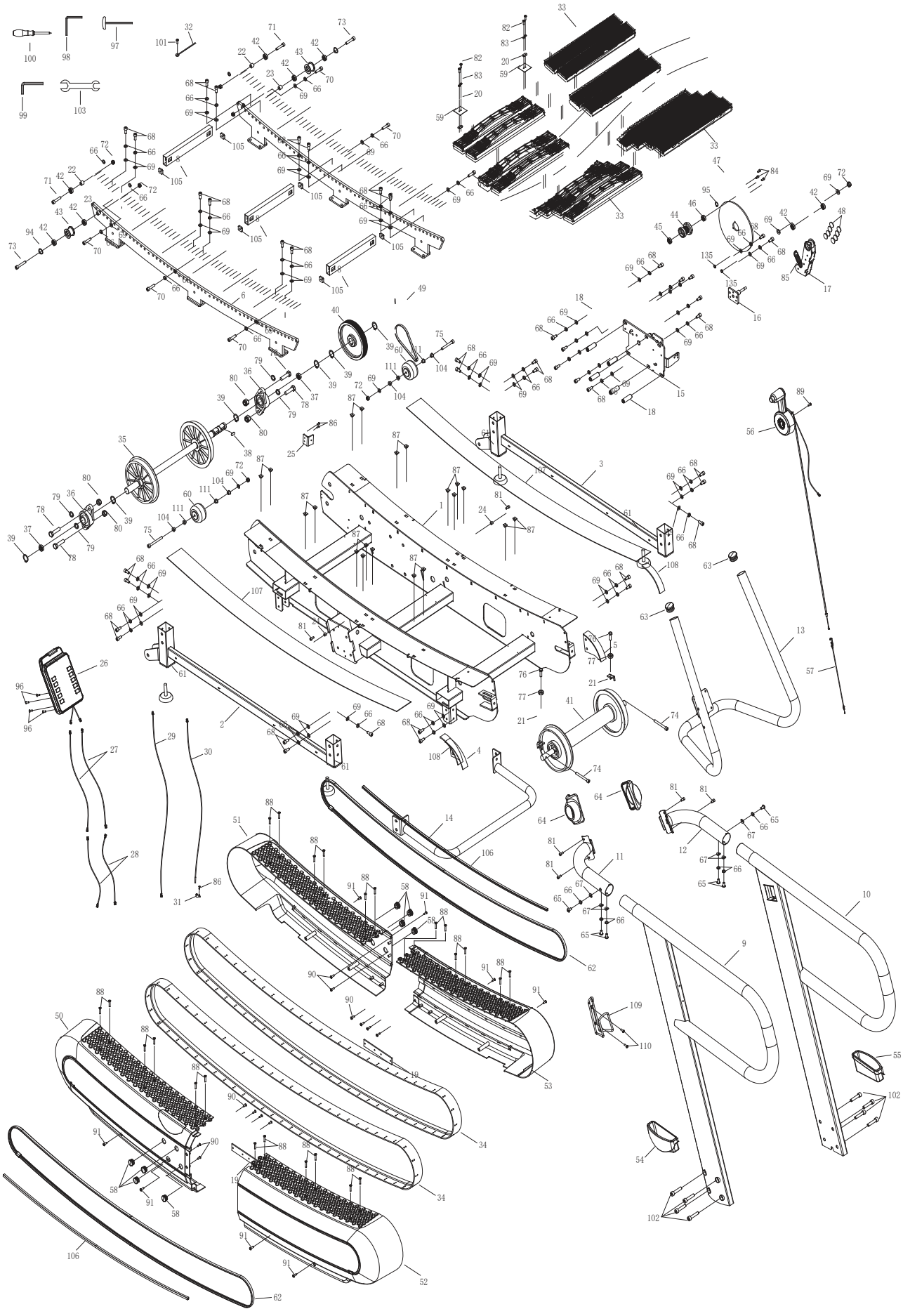

ASSEMBLY STEPS

STEP 1

First, remove all the components from the box. Components are as shown in the diagram.

NOTE: Do not fully tighten screws & bolts at end of each step, but fully tighten all screws & bolts until all assembly steps are finished.

Main Frame 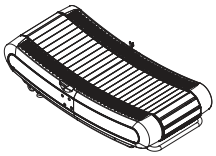	9# Left Upright: 1 PC 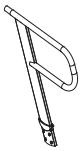	10# Right Upright: 1 PC 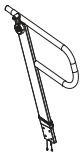	11# Left Front Handrail Connection Bracket: 1 PC
12# Right Front Handrail Connection Bracket: 1 PC	64# Front Decorative Cover: 2 PCS 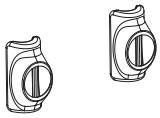	58# Round Inner Cap: 8 PCS	13# Console Support Bracket: 1 PC
26# Console Monitor: 1 PC 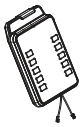	109# Bottle Holder: 1 PC		

STEP 2

Find the **Main Frame** among the components illustrated in previous step

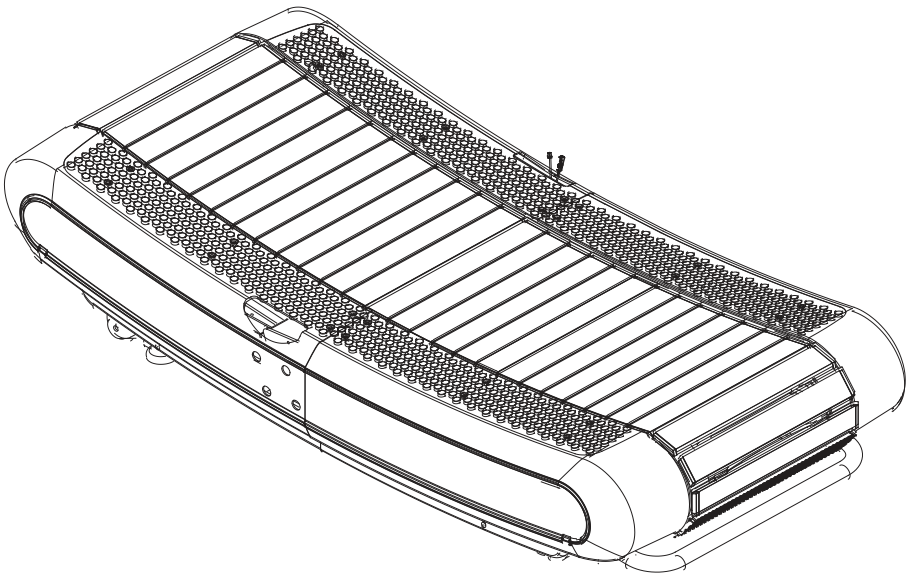

ASSEMBLY STEPS

STEP 3

Insert **Left Upright (9)** into the left positioning hole on the **Main Frame**. Make sure the screw holes on **Left Upright (9)** match the **Positioning Sleeve (24)**. Place **Left Silicone Pad (54)** onto the gap between **Left Upright (9)** and **Main Frame**.
Then tighten **Left Upright (9)** by using 4 pcs of **Socket Head Cap Screw M10X45mm (102)**.
Place 4 pcs of **Round Inner Cap (58)** onto the 4 screws holes.

NOTE: Do not fully tighten screws & bolts at end of this step.

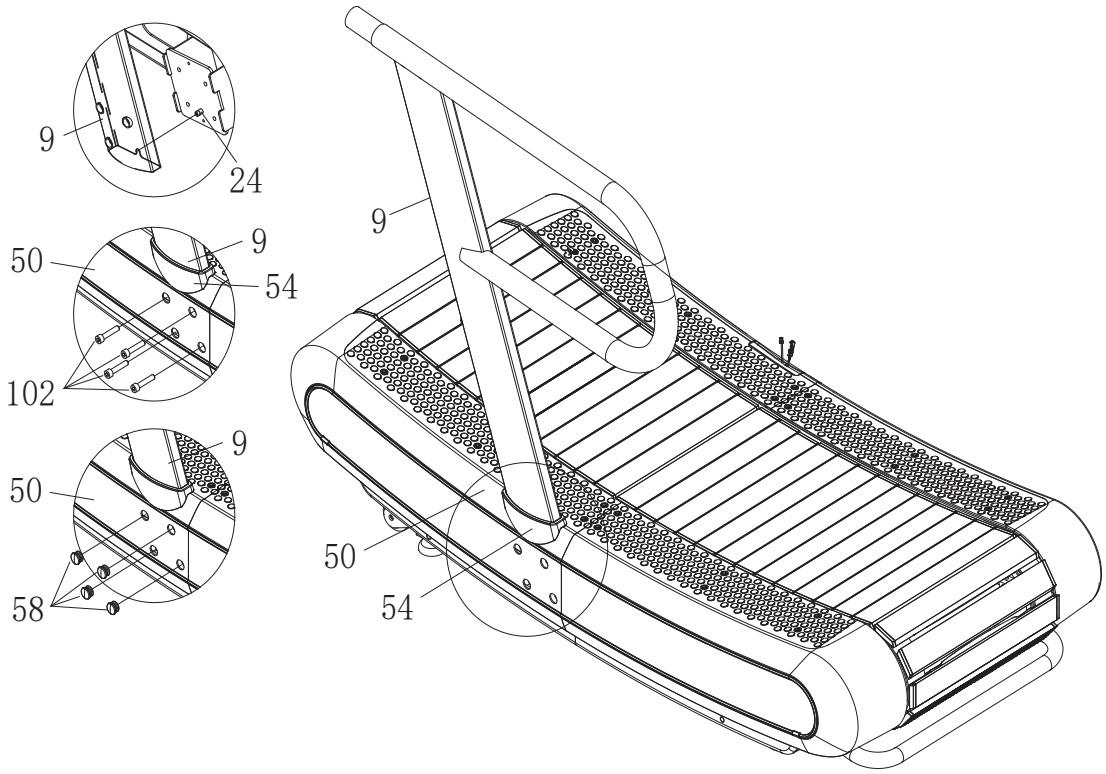

ASSEMBLY STEPS

STEP 4

Locate the **Lower Section Sensor Wire (29)**, and connect it with **Rod-type Sensor (30)**. Adjust the resistance level to level 8, and plug the **Wire of Resistance Adjustment Lever (56)** into the **Plug Head of Lower Section Cable of Resistance Adjustment (57)**. Then adjust the resistance level to level 1, and remove the wire clip from the **Plug Head of Lower Section Cable of Resistance Adjustment (57)**.

Insert **Right Upright (10)** into the right positioning hole on the **Main Frame**. Make sure the screw holes on **Right Upright (10)** match the **Positioning Sleeve (24)**. Place **Right Silicone Pad (55)** onto the gap between **Right Upright (10)** and **Main Frame**.
Then tighten **Right Upright (10)** by using 4 pcs of **Socket Head Cap Screw M10X45mm (102)**. Place 4 pcs of **Round Inner Cap (58)** onto the 4 screws holes.

NOTE: Do not fully tighten screws & bolts at end of this step.

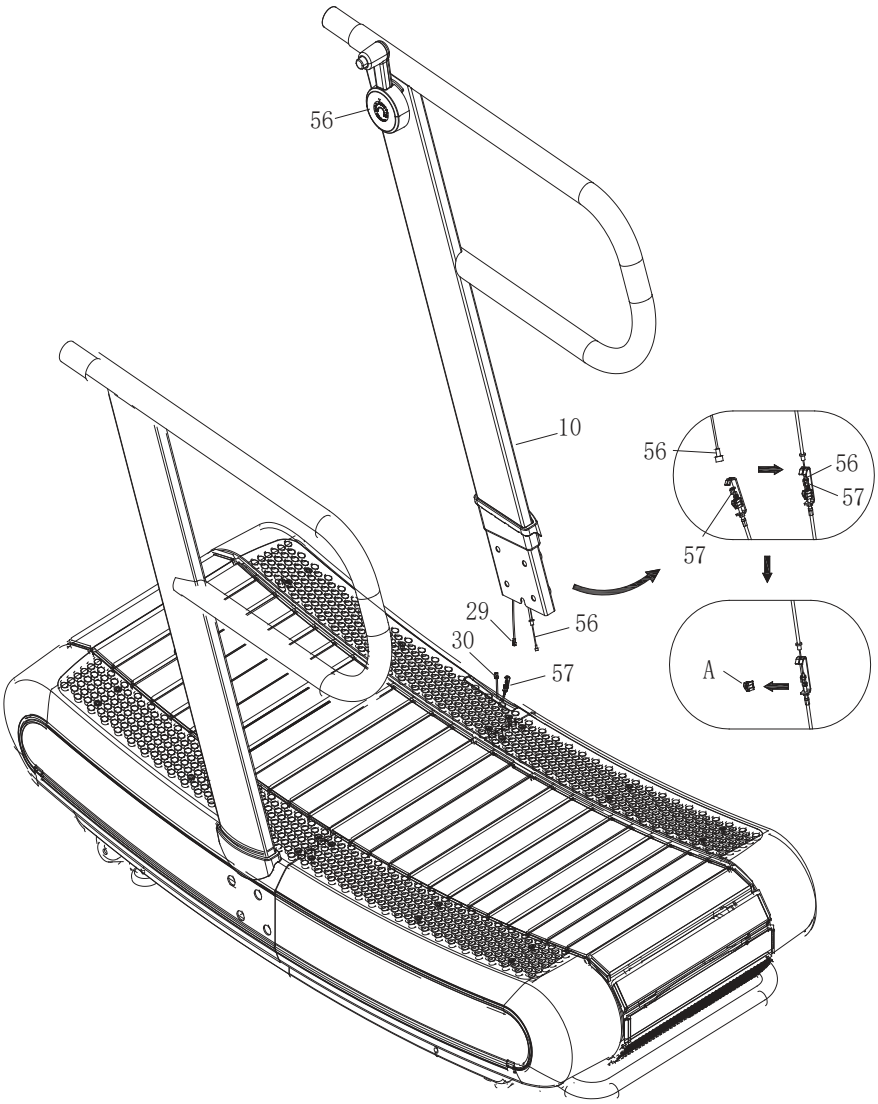

ASSEMBLY STEPS

STEP 5

Place 1 pc of **Front Decorative Cover (64)** onto **Left and Right Front Handrail Connection Bracket (11/ 12)**.

Connect 1 pc of **Middle Section Sensor Wire (28)** with **Wire of Resistance Adjustment Lever (56)**, and then connect another piece of **Middle Section Sensor Wire (28)** with **Lower Section Sensor Wire (29)**.

Tighten **Right Front Handrail Connection Bracket (12)** onto **Right Upright (10)** by using 3 pcs of **Button Head Cap Screw M8X15mm (65)**, 3 pcs of **Spring Washer M8 (66)**, and 3 pcs of **Arc Washer M8 (67)**.

Tighten **Left Front Handrail Connection Bracket (11)** onto **Left Upright (9)** by using 3 pcs of **Button Head Cap Screw M8X15mm (65)**, 3 pcs of **Spring Washer M8 (66)**, and 3 pcs of **Arc Washer M8 (67)**.

NOTE: Do not fully tighten screws & bolts at end of this step.

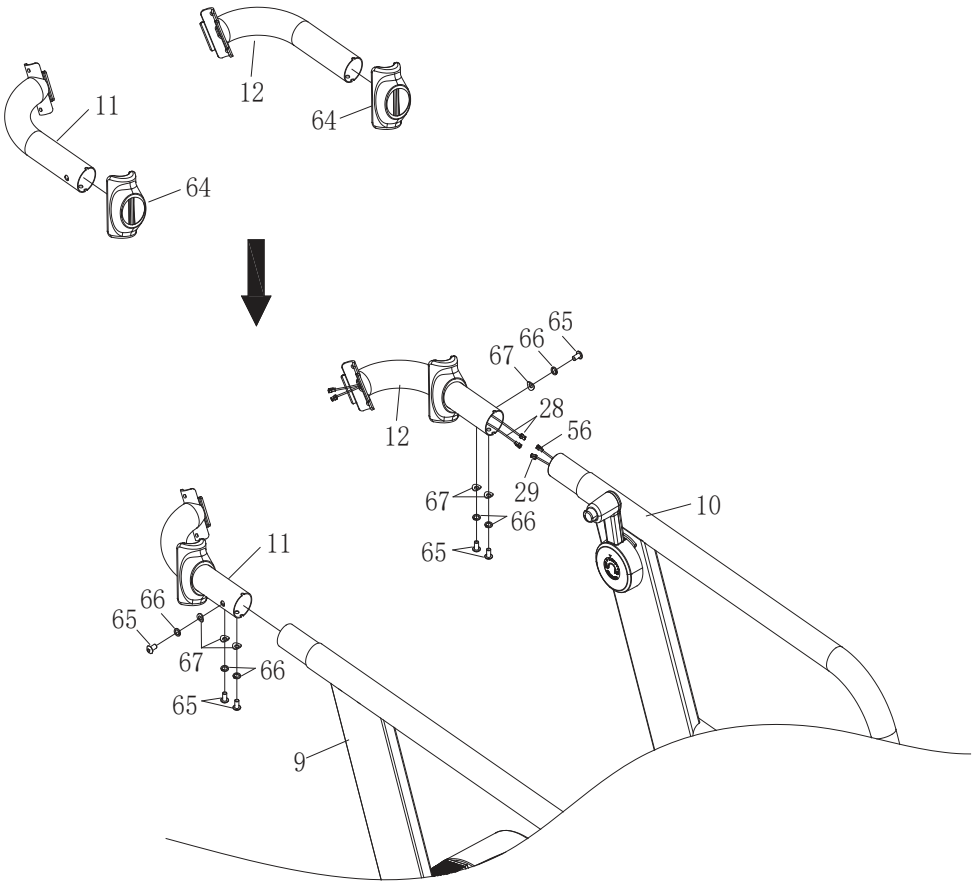

ASSEMBLY STEPS

STEP 6

Connect 2 pcs of **Upper Section Sensor Wire (27)** with 2 pcs of **Middle Section Sensor Wire (28)** together.
Tighten **Console Support Bracket (13)** onto **Left and Front Handrail Connection Bracket (11/ 12)** by using 4 pcs of **Socket Head Cap Screw M6X16mm (81)**. Fully tighten the **Socket Head Cap Screw M6X16mm (81)**.
Slide **Front Decorative Cover (64)** forward to cover the connection point between **Console Support Bracket (13)** and **Left and Front Handrail Connection Bracket (11/ 12).**

NOTE: Fully tighten all screws & bolts at end of this step and all previous steps.

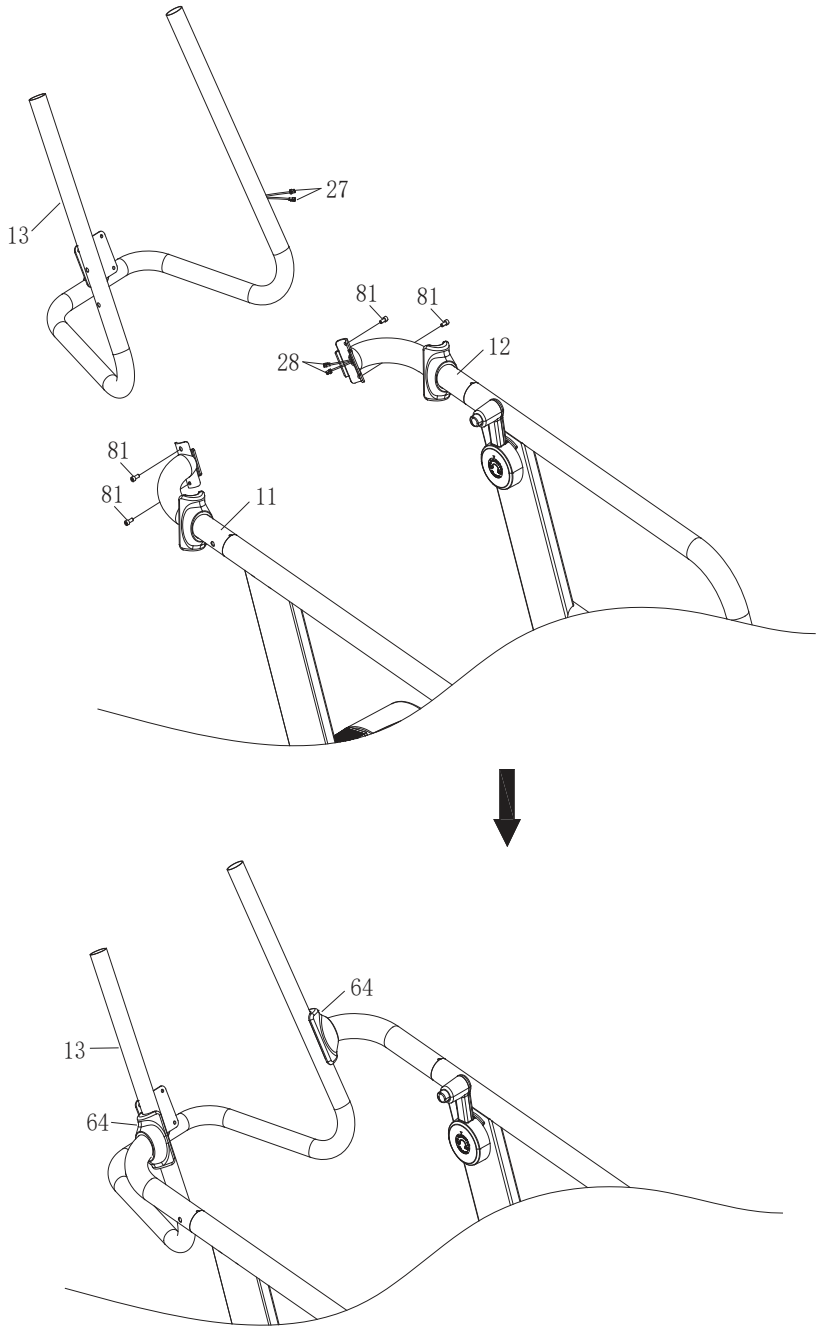

ASSEMBLY STEPS

STEP 7

Remove 4 pcs of **Phillips Truss Head Screw M5X10mm (96)** from **Console Monitor (26).** Connect 2 pcs of **Wire of Console Monitor (26a)** with 2 pcs of **Upper Section Sensor Wire (27)**. Secure the **Console Monitor (26)** onto **Console Support Bracket (13)** by using 4 pcs of **Phillips Truss Head Screw M5X10mm**.

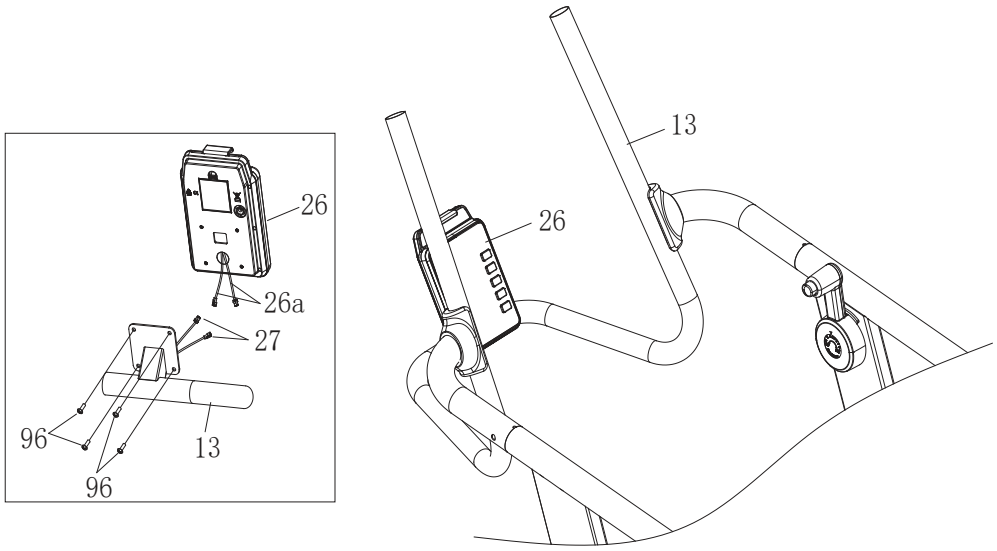

STEP 8

Attach the **Bottle Holder (109)** to the **Left Upright (9)** by using 2 pcs of **Philips Pan Screw M5x12mm (110**).

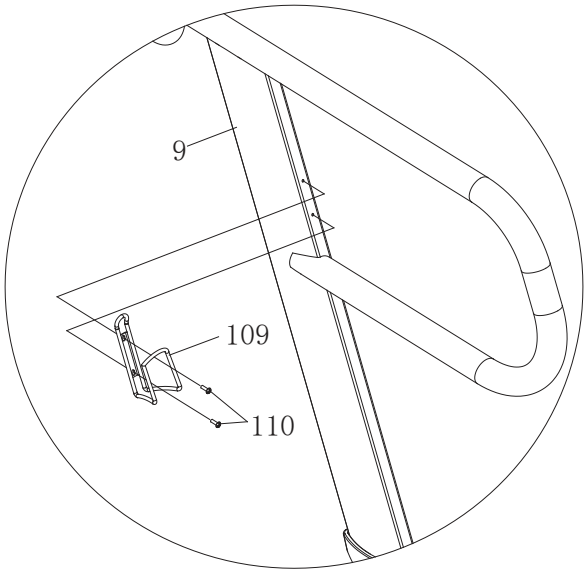

OPERATION GUIDE

We recommend that you use this computer console to vary your workout from session to session and note your progress toward your fitness goals. When used regularly in this way, the computer console can become an important source of motivation and interest which will help keep you on track.

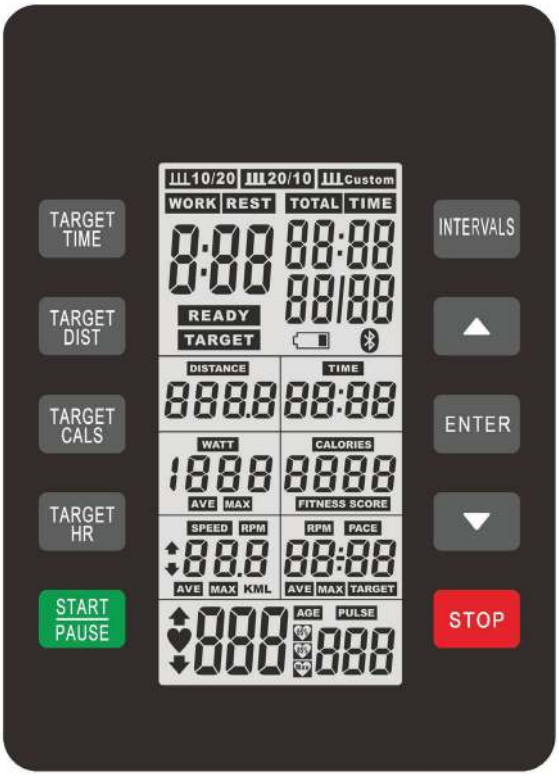

I. CONSOLE DISPLAY

TOTAL TIME:

- Display range: 00:00 ~ 99:59. Data can only count up.

TIME:

- Display range: 00:00 ~ 99:59. Data can count up or count down.

DISTANCE:

- Display range: 0.0 ~ 999.9 km or mile. Data can count up or count down.

CALORIES:

- Display range: 0 ~ 9999 kcal. Data can count up or count down.

WATT & RESISTANCE:

- Display watt range: 0 ~ 1999 watt.
- Display resistance range: 1 ~ 8 level.
- This window display switches between watt and resistance level for every 5 seconds.

OPERATION GUIDE

PACE:
- Display range: 0:00 ~ 99:59 km/h or m/h.

SPEED:
- Display range: 0.0 ~ 99.9 km/h or m/h.

PULSE:
- Display range: 30 ~ 230.
- Pulse displays when detect the user's heart rate and pulse icon flashes.
- When no detect the heart rate, this window display shows "P".

BLUETOOTH ICON:
- Display to show a connected smart device for Bluetooth heart rate function or Bluetooth app function.
- Bluetooth compatible app include Kinomap & Zwift.
- Console monitor displays as illustrated after successfully connect to a smart device.

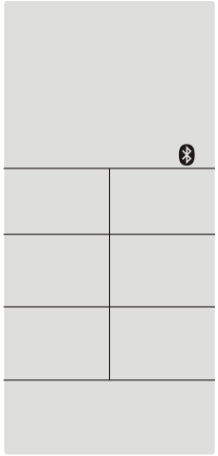

BATTERY ICON:
- Display to remind battery is low and needs a change.
- Console operates on 4 Size AA batteries. The battery compartment is on the back of the console. Battery is included.

II. INITIAL SETUP

POWER ON:
- Console displays enter standby mode with all windows display 0, as illustrated in 1st drawing below, via installing 4 Size AA batteries.
- Start to run to enter Quick Start mode, as illustrated in 2nd and 3rd drawings.
- Press and hold STOP button for over 2 seconds to clear all training data.
- Backlight shows only when SPEED reaches 4 km/h under workout mode.
- Adjust resistance level when enter workout mode.

OPERATION GUIDE

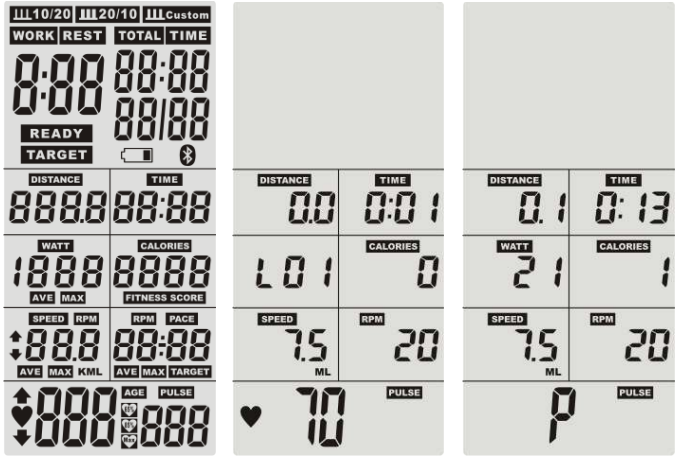

POWER OFF:

- Under standby mode, console display automatically shuts off after 4 minutes of inactivity.
- Under workout mode, console display automatically returns to standby mode after 5 minutes of inactivity.
- Under training model, press STOP button to end the training. All window displays show and switches among training data, max training data (for Watt/ Speed/ Pulse), and average training data (for Watt/ Speed) for every 7 seconds, as illustrated. These data are repeatedly displayed for 2 cycles and console enters standby mode. When training data is still displaying, press STOP button to directly enter standby mode.

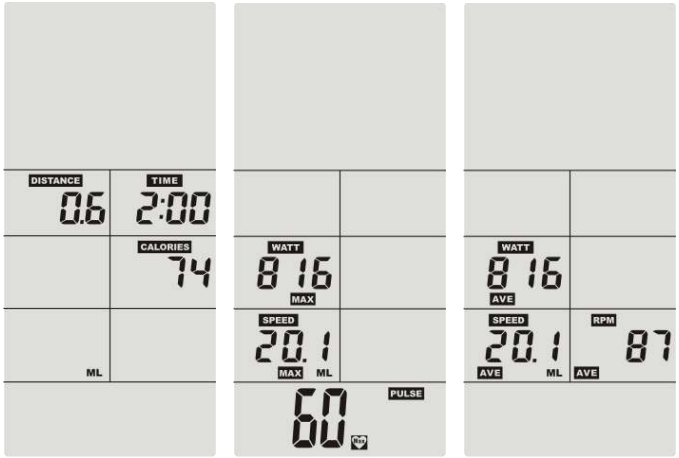

TEMPORARY POWER OFF:

- During training, press START button to temporarily stop the training. All window displays show “P”, as illustrated below. Console display automatically enters standby mode after 5 minutes of inactivity. Press START button again to resume training under standby mode.

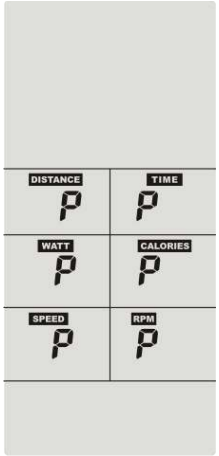

III. FUNCTION BUTTONS

START/ PAUSE BUTTON:

- Press START button to begin the workout.
- Press START button under workout mode to temporarily stop the workout. Press this button again to resume the workout.

STOP BUTTON:

- Press and hold STOP button for over 2 seconds to activate TOTAL RESET function and clear all training data.
- Press STOP button to end the workout under workout mode.

UP BUTTON:

- Press to increase the preset values. Press the button and hold it down, the presetting value will go faster, release the button to stop.

DOWN BUTTON:

- Press to decrease the preset values. Press the button and hold it down, the presetting value will go faster, release the button to stop.

ENTER BUTTON:

- When selecting the programs and presetting target values, press the button to confirm or go into next value setting.

INTERVALS BUTTON:

- In the standby mode, press the button to enter the Interval program. There're 3 interval programs, which are Interval 10/20, Interval 20/10, and Interval Custom in sequence.

TARGET TIME BUTTON:

- In the standby mode, press the button to enter the Target Time Program.

TARGET DIST BUTTON:
- In the standby mode, press the button to enter the Target Distance Program.

TARGET CALS BUTTON:
- In the standby mode, press the button to enter the Target Calories Program.

TARGET HR BUTTON:
- In the standby mode, press the button to enter the Target Heart Rate Program.

IV. PROGRAMS

The Console Monitor has 8 programs: QUICK START, INTERVALS 10/20, INTERVALS 20/10, INTERVALS CUSTOM, TARGET TIME, TARGET CALORIES, TARGET DISTANCE, and TARGET HEART RATE.

Press **"INTERVAL"** button to enter the Interval Programs. Press multiple times to cycle through Interval 10/20, Interval 20/10, and Interval Custom programs.

1. QUICK START PROGRAM

- To Quick Start the program, you can start to run and console lights up when PACE is detected 10 km/h or above, as illustrated below.

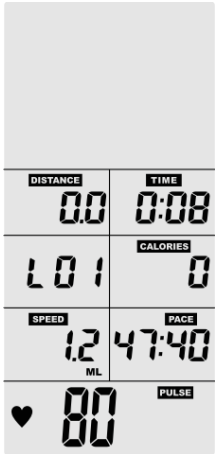

2. INTERVAL 10/20 PROGRAM

- Press INTERVALS button to select "**INTERVAL 10/20**" program; in the meantime, the 10/20 icon on upper left corner of console display flashes, as illustrated. Press ENTER button or START button to confirm the program selection.
- Console display then shows READY for 3 seconds, as illustrated. After countdown for 3 seconds, begin the training for 1st round and console display shows 01/XX; in the meantime, WORK icon flashes and Total Time window starts to countdown for 10 seconds, as illustrated.
- Once time countdown completes, console display shows REST icon and this icon flashes for 20 seconds, as illustrated, and Total Time window starts to countdown.

- Then begin the 2nd round of training, and console display shows 02/XX. In each round, there's 10 seconds of workout and 20 seconds of rest.
- When the last round is completed, INTERVAL 10/20 program ends.

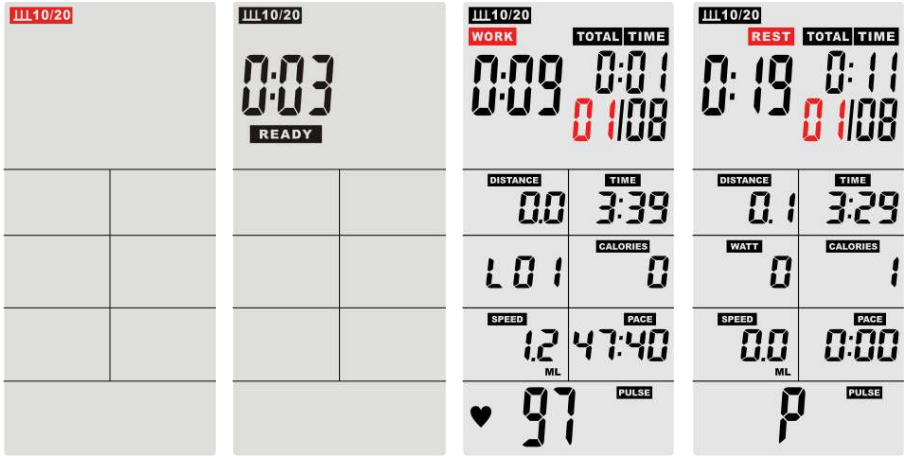

3. INTERVAL 20/10 PROGRAM

- Press INTERVALS button to select "**INTERVAL 20/10**" program; in the meantime, the 20/10 icon on upper middle corner of console display flashes, as illustrated. Press ENTER button or START button to confirm the program selection.
- Console display then shows READY for 3 seconds, as illustrated. After countdown for 3 seconds, begin the training for 1st round and console display shows 01/XX; in the meantime, WORK icon flashes and Total Time window starts to countdown for 20 seconds, as illustrated.
- Once time countdown completes, console display shows REST icon and this icon flashes for 10 seconds, as illustrated, and Total Time window starts to countdown.
- Then begin the 2nd round of training, and console display shows 02/XX. In each round, there's 20 seconds of workout and 10 seconds of rest.
- When the last round is completed, INTERVAL 20/10 program ends.

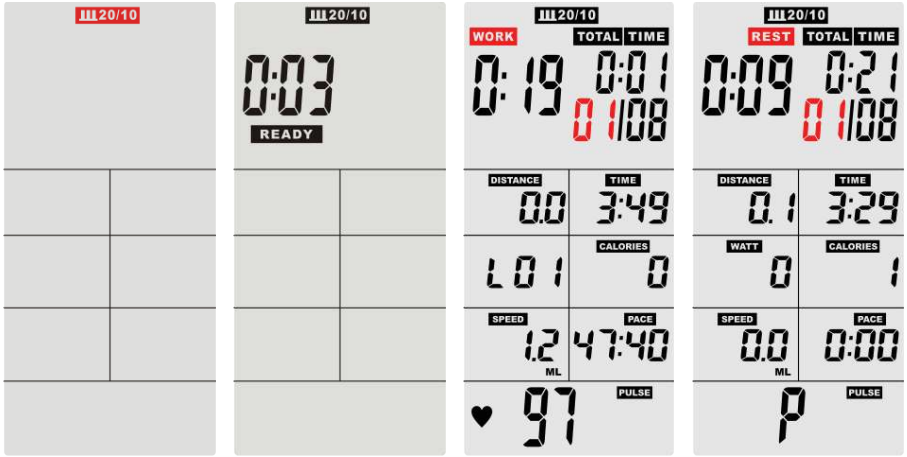

4. INTERVAL CUSTOM PROGRAM

- Press INTERVALS button to select “**INTERVAL CUSTOM**” program; in the meantime, the Custom icon on upper right corner of console display flashes, as illustrated. Press ENTER button or START button to confirm the program selection.
- Begin to the custom program setting. Console display shows 00/01, and press UP or DOWN button to set the total workout rounds, as illustrated. The workout round setting range is 01~20. Press ENTER button to proceed next setting.
- Console display shows WORK and Total Time window flashes. Default time setting is 0:30. Press UP or DOWN button to adjust time value. Setting range is 0:05~9:59, as illustrated. Press ENTER button to proceed next setting.
- Console display shows REST and Total Time window flashes. Default time setting is 0:20. Press UP or DOWN button to adjust time value. Setting range is 0:05~9:59, as illustrated. Press ENTER button to begin workout.
- Console display then shows READY for 3 seconds, as illustrated. After countdown for 3 seconds, begin the training for 1st round and console display shows 01/XX; in the meantime, WORK icon flashes and Total Time window starts to countdown, as illustrated.
- Once time countdown completes, console display shows REST icon and this icon flashes, as illustrated, and Total Time window starts to countdown.
- Then begin the 2nd round of training, and console display shows 02/XX. In each round, there’s workout and rest.
- When the last round is completed, INTERVAL CUSTOM program ends.

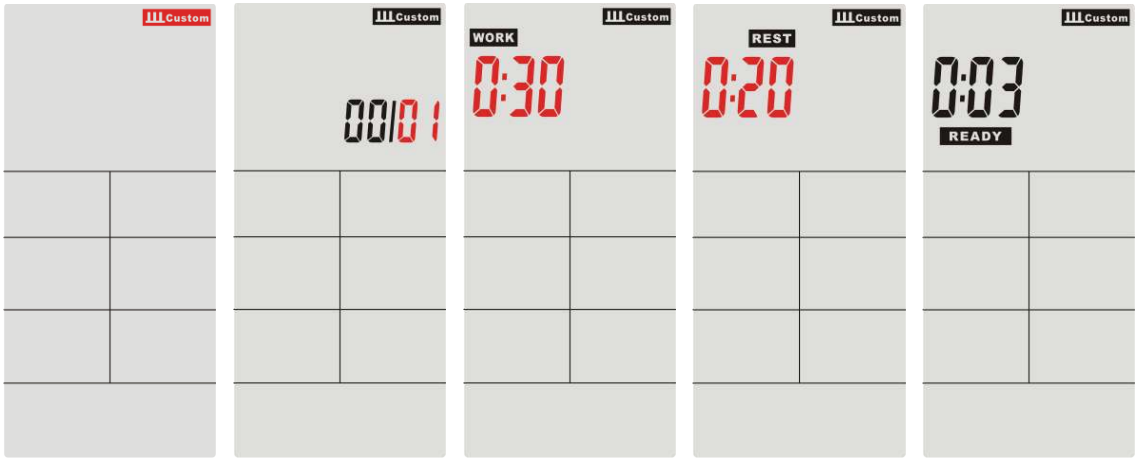

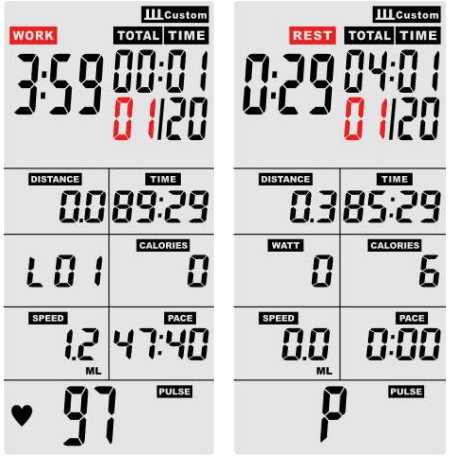

5. TARGET TIME PROGRAM

- Press TARGET TIME button to enter “TARGET TIME” program.
- Console display shows Target icon and it flashes, as illustrated.
- Time window shows default time setting as 1:00, or the time value set in previous training. Press UP or DOWN button to adjust time value. Setting range is 1:00~99:00. Press ENTER button to begin the training, as illustrated. Time starts to countdown and Time window flashes.

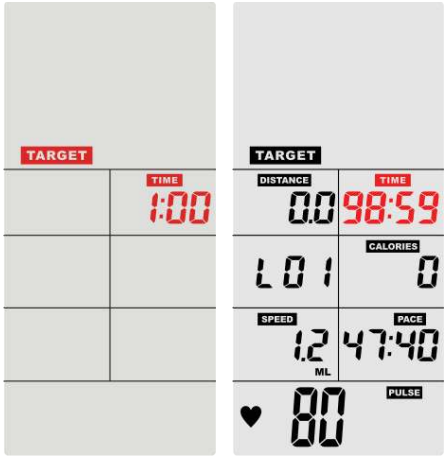

6. TARGET CALORIES PROGRAM

- Press TARGET CALORIES button to enter “TARGET CALORIES” program.
- Console display shows Target icon and it flashes, as illustrated.
- Calories window shows default calories setting as 20 kcal, or the calories value set in previous training. Press UP or DOWN button to adjust calories value. Setting range is 1~2000 kcal. Press ENTER button to begin the training, as illustrated. Calories starts to countdown and Calories window flashes

7. TARGET DISTANCE PROGRAM

- Press TARGET DISTANCE button to enter “TARGET DISTANCE” program.
- Console display shows Target icon and it flashes, as illustrated.
- Distance window shows default distance setting as 0.5 km//h or m/hl, or the distance value set in previous training. Press UP or DOWN button to adjust distance value. Setting range is 0.5~100 km/h or m/h. Press ENTER button to begin the training, as illustrated. Distance starts to countdown and Distance window flashes

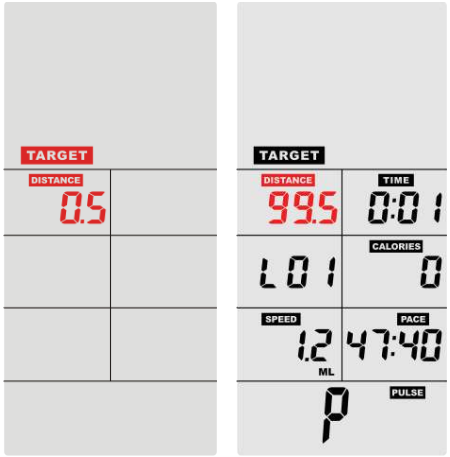

8. TARGET HEART RATE PROGRAM

- Press TARGET HEART RATE button to enter “TARGET HEART RATE” program.
- Console display shows Age icon and it flashes. Age window shows default age setting as 30 years old, or the age value set in previous training, as illustrated. Press UP or DOWN button to adjust age value. Setting range is 11~120 years old. Press ENTER button to proceed next setting.
- Console display shows 65%, as illustrated. Press UP or DOWN button to adjust programs among 65%, 85%, Custom, as illustrated.
- When 65% or 85% is selected, press ENTER to being the training.
- When Custom is selected, console display shows default setting as 100, as illustrated. Press UP or DOWN button to adjust setting value. Setting range is 50~195.

OPERATION GUIDE

- Press ENTER button to begin the training. TARGET icon and PULSE icon flash.
- When detected heart rate is close to set value within +/- 10% range, Pulse window lights up, not flash, as illustrated.
- When detected heart rate is below set value (< 10%), Up Arrow shows on Pulse window as reminder to increase speed, as illustrated.
- When detected heart rate exceeds set value (> 10%), Down Arrow shows on Pulse window as reminder to lower speed, as illustrated.
- When detected heart rate exceeds or equals to set value, console alarm starts to sound every second.
- When heart rate cannot be detected, Pulse window display “P” and console enters standby mode after 30 seconds.
- When console doesn’t detect any setting operation under setting process, console display enters standby mode after 30 seconds.

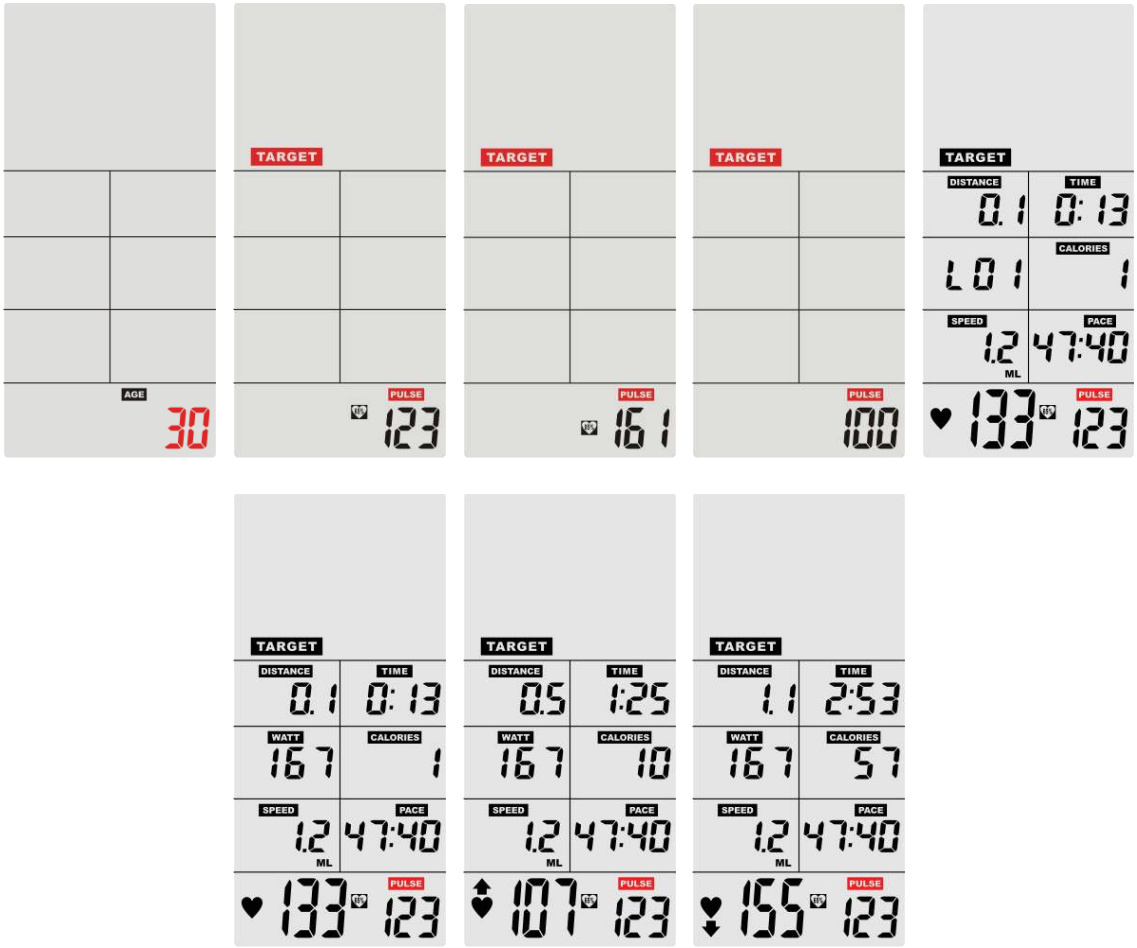

V. BLUETOOTH CONNECTION

FTMS PROTOCOL

The Bluetooth icon will be displayed at the top of the monitor screen when it's connected to an app.

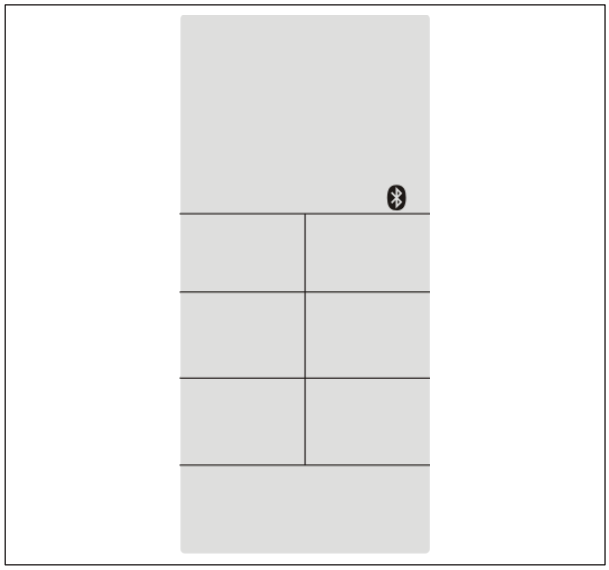

Please make sure the console is activated in order to proceed Bluetooth connection with your smartphone or tablet devices.

AVAILABLE APPS

Kinomap

Zwift

Please go to settings on your device to allow the apps to access Bluetooth connection.

WARRANTY

For a period of either 120 days or 24 months after the purchase date (the “Warranty Period”), a warranty will apply on moving parts, pully's, cables, buttons, upholstery, hydraulic seats and cables for a period of 120 days, with the balance of the machine being a 24 month warranty. Skelcore warrants that the equipment for materials and workmanship such that, when installed and used in accordance with the owner’s manual, will operate for its intended purpose. The warranty applies to equipment installed in air conditioned and temperature controlled environments and will be null and void if used outdoors or in an environment with no air conditioning. Skelcore will, at its expense and as its sole obligation and your exclusive remedy for any breach of this warranty, repair or replace the equipment or any parts, in its discretion, provided that such malfunction or defect is reported to Skelcore by you in writing during the Warranty Period and that you provide all information that may be necessary or requested to assist Skelcore in resolving the malfunction. If Skelcore determines that it is unable to repair the malfunction or replace the equipment, Skelcore or its authorized reseller may refund you the fees you actually paid for the defective equipment, in which case you agree to immediately cease using and to destroy, throw out, or otherwise take steps to ensure no one can use the equipment ever again.

If there are any problems or malfunctions with the Skelcore equipment you purchased, please contact your sales manager promptly. They will help you identify the cause of the problem and assist you in resolving it. If the issue involves parts that cannot be quickly addressed, the company’s professional after-sales service personnel will provide specialized support.

COST OF REPAIRS

UNDER WARRANTY

Any items still under warranty will be repaired free of charge, if the repair complies with the terms and conditions of the warranty (refer to the “warranties” section in this manual). Any items that need to be repaired that are not covered under the warranty will be at your expense. A quote for the repair or replacement of these items will be provided to you for approval prior to any repairs being conducted.

OUT OF WARRANTY

Any items that need to be repaired once the warranty has expired will be at your expense, including call-out fees. A quote for the repair or replacement of these items will be provided to you for approval prior to any repairs being conducted.
Save this instruction manual for future use and reference.

SAVE THIS INSTRUCTIONAL MANUAL FOR FUTURE USE AND REFERENCE.

WARRANTY

To maintain your warranty, please complete the form below upon receiving your machine and email it back to the representative who sold you the goods.

Failure to do so will result in the loss of warranty.

SKELCORE ATTACH RECEIPT

CLIENT DETAILS

- **NAME:**
- **EMAIL:**
- **CELL:**
- **TEL(H):**
- **TEL(W):**
- **FAX:**
- **ADDRESS:**

PRODUCT DETAILS

- **DATE OF PURCHASE:**
- **SERIAL NUMBER:**
- **TILL SLIP NUMBER:**
- **DESCRIPTION OF PURCHASE:**

Signature: _____

Date: _____