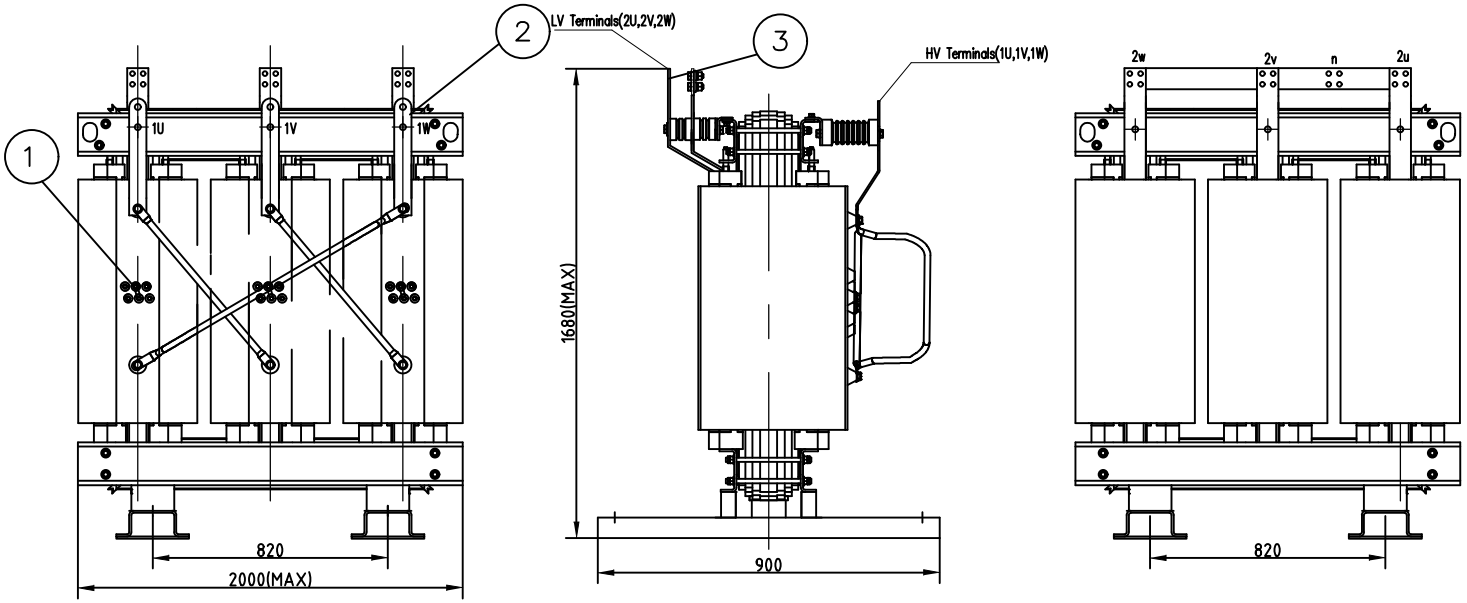

MV side front view

Side view

LV side front view

REV.	DATE	DESCRIPTION	APPROVED
C			
B			
A			

Tap	Voltage	Amps	Connections
A	24150		1-2
B	23575		2-3
C	23000	25.1	3-4
D	22425		4-5
E	21850		5-6

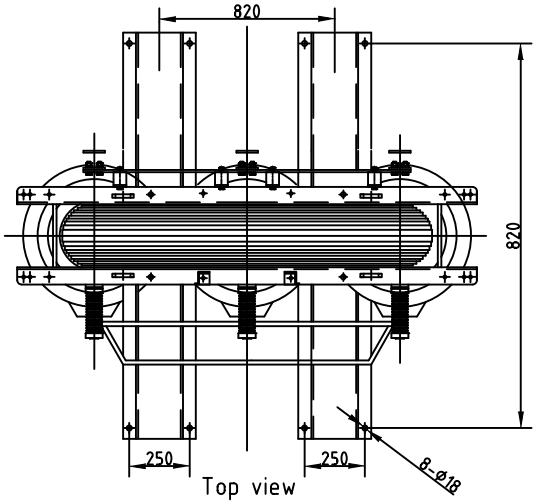

Top view

Primary terminal

Copper bus t=4

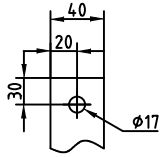

secondary terminal

Copper bus t=10

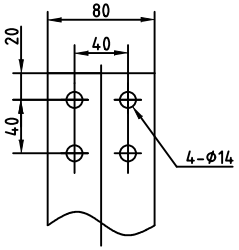

Standards	IEC 60076-11				
Rated power	1000	kVA	Frequency	60	Hz
Rated Primary voltage	23	kV	Impedance	6	%
Rated secondary voltage	0.48	kV	Weight	3290	kg
Off-Load Tapping on MV Coil	±2x2.5	%	Phase	3	
Winding Material (MV/LV)	AL/AL		Vector group	Dyn1	
Climatic Class	C2		Type of cooling	AN	
Environmental Class	E2		Insulation class	H	
Fire Behaviour Class	F1				
Power Frequency Withstand Voltage (MV/LV)		50/3	kV		
Lightning Impulse Withstand Voltage (MV/LV)		125/-	kV		
Average Winding Temp. Rise (MV/LV)		125	K		
Losses - No Load (W):2800	Losses - 100% Load@145°C (W): 9500				

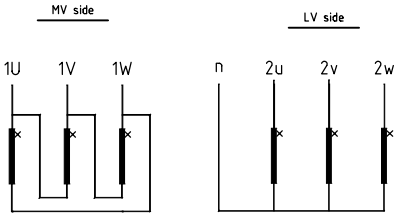

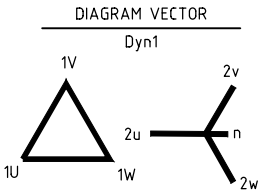

Item	Q'TY	Description	Reference
6			
5			
4			
3	4	Secondary terminal	
2	3	Primary terminal	
1	6	MV taps	

CLIENT			
MANUFACTURER	EATON Eaton Transformer(Jiangsu)Co,Ltd		
DWG NO:			
TITLE	SCLB-1000/23/0.48 cast coil dry-type power transformer outline drawings		
DRAWN	CHECKED	APPROVED	DATE
Tangjp	ZhaoLL	LiuZ	20250730
SCALE	SIZE	REV	SHEET
1:1	A3	A	1 of 1

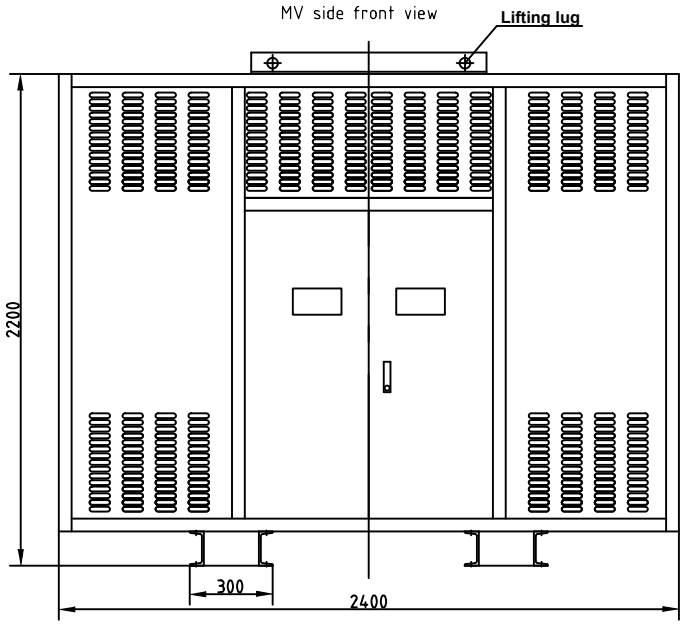

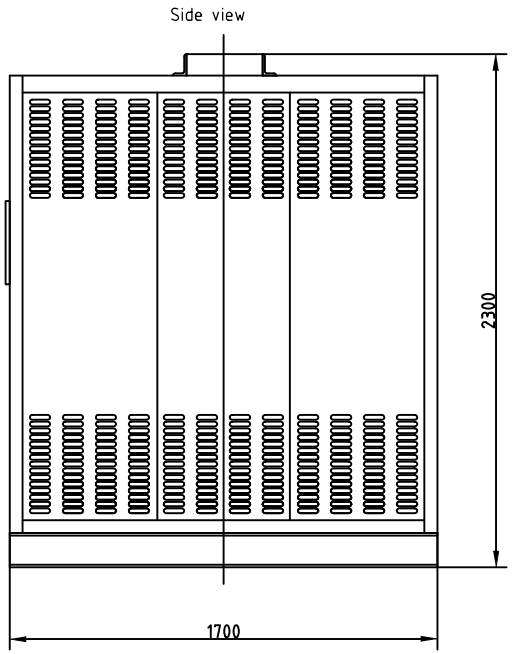

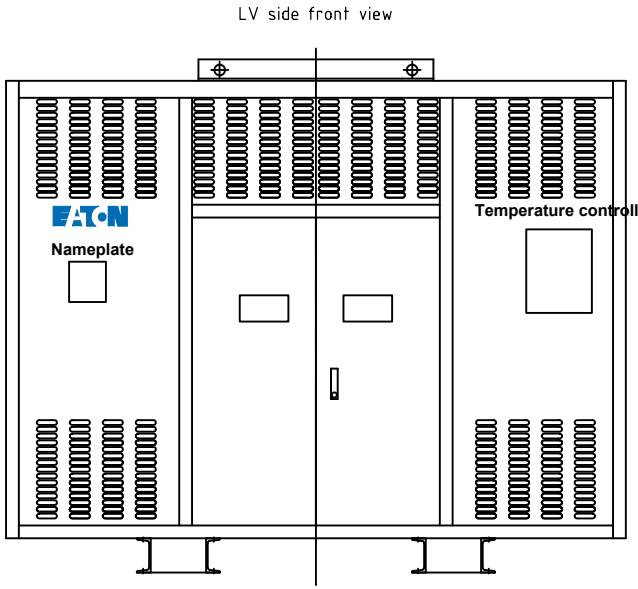

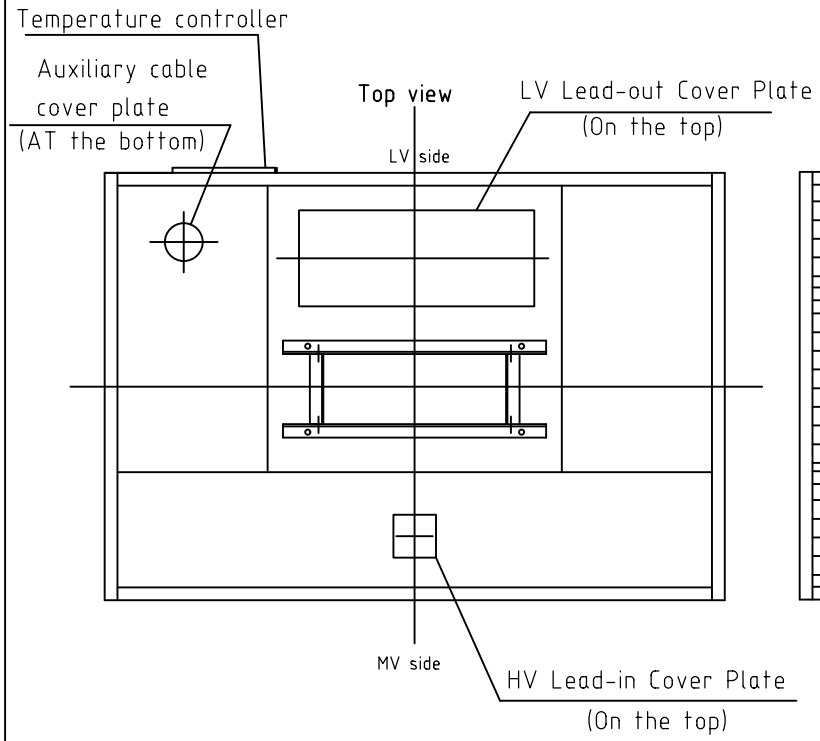

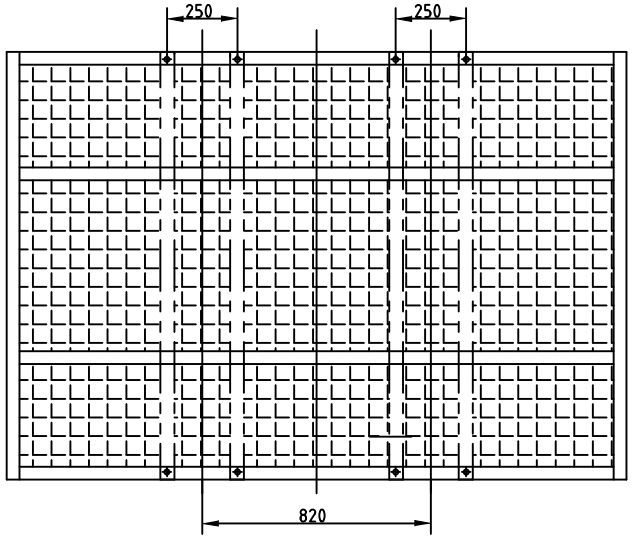

Note:

1. Cold plate spray shell,IP20,2.0mm thick,color RAL7035.
2.There are no special requirements for the clearance between adjacent transformer shells, as well as a distance of 500mm from walls and other obstacles.

C				CLIENT			
B				MANUFACTURER	EATON Eaton Transformer(Jiangsu)Co,Ltd		
A				DWG NO:			
				TITLE	SCLB-1000/23/0.48 cast coil dry-type power transformer enclosure drawings		
REV.	DATE	DESCRIPTION	APPROVED	DRAWN	CHECKED	APPROVED	DATE
				Tangjp	ZhaoLL	LiuZ	20250730
				SCALE	SIZE	REV	SHEET
				1:1	A3	A	2 of 2