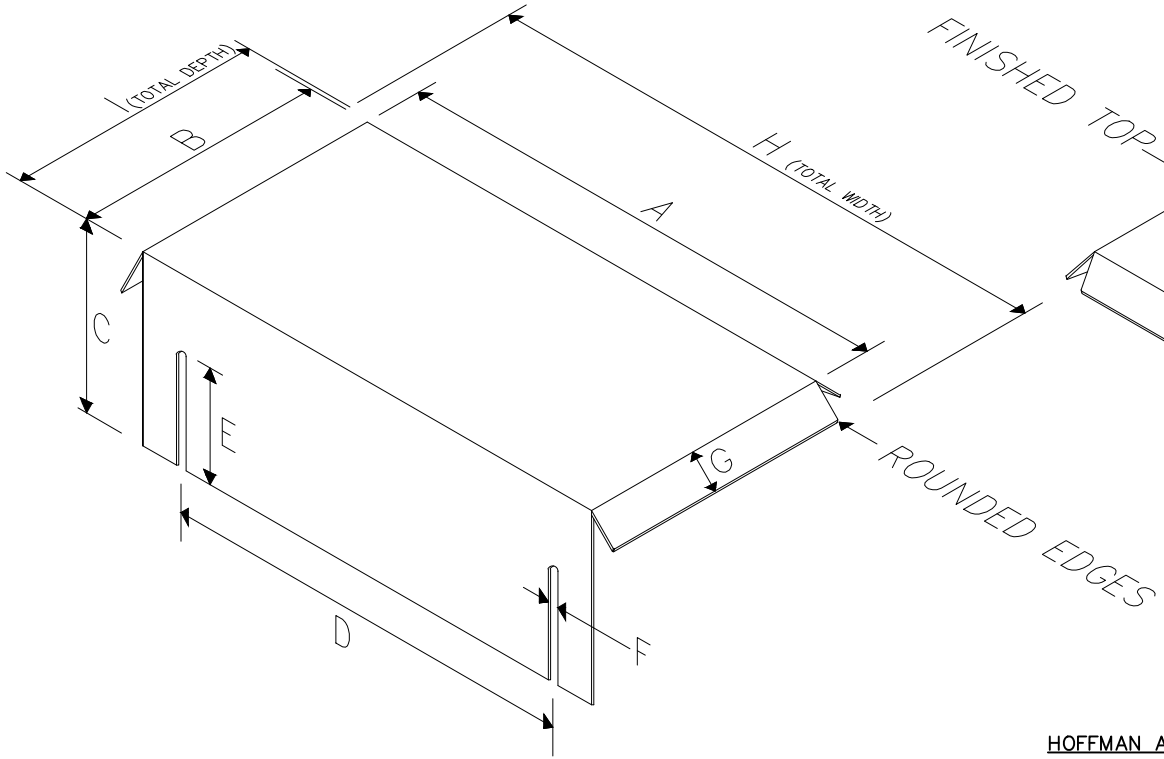

BACK VIEW

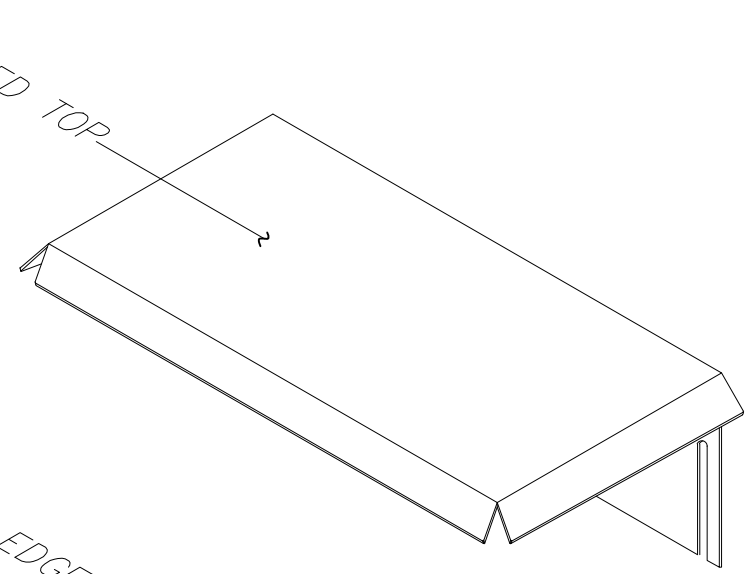

FRONT VIEW

HOFFMAN A SERIES
METALLIC ENCLOSURES

MODEL	A	B	C	D	E	F	G	H	I
SS-A2410AL	24"	12"	7.5"	18"	4.5"	0.44"	2"	27.46"	13.73"
SS-A3012AL	30"	14"	7.5"	24"	4.5"	0.44"	2"	33.46"	15.73"

ALUMINUM THICKNESS IS: 0.06"

Drawing Title	Project Title					
ALUMINUM SUN SHIELD	GENERAL ARRANGEMENT HOFFMAN A SERIES SUN SHIELD	NO.	REVISION	APPROVED BY	Cox Research and Technology, Inc. P.O. Box 77808 Baton Rouge, LA 70879	DATE 08/21/25
		Sales Engineer N/A	Application Engineer C.C.	Drawn By JCF	Ph. (225)756-3271 Fax (225)756-1030	DRAWING NUMBER HOFFMAN A SERIES
						SHEET NUMBER 1