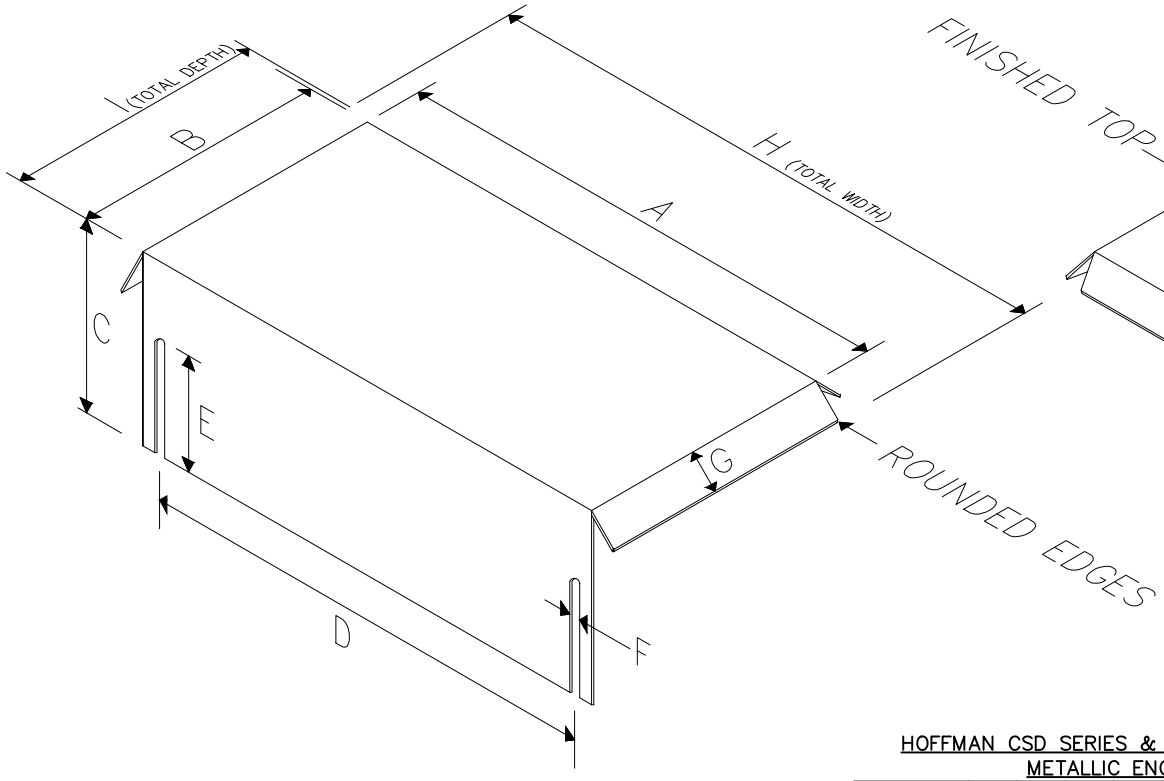

BACK VIEW

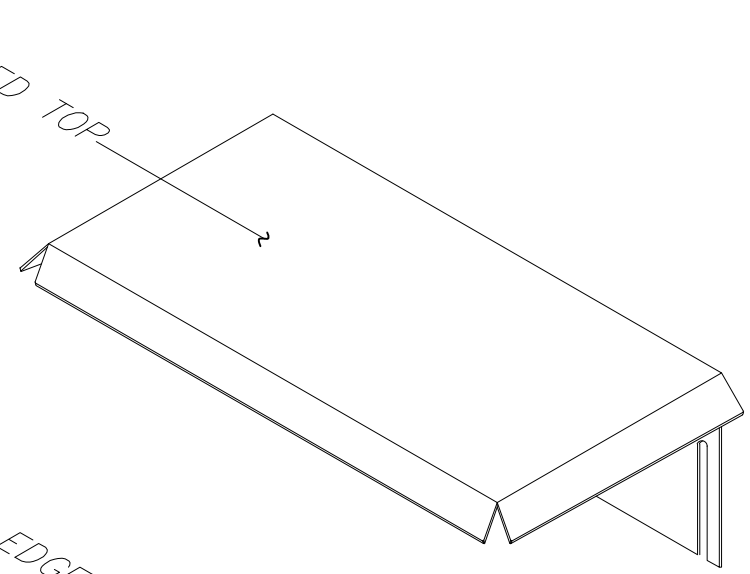

FRONT VIEW

ALUMINUM THICKNESS IS: 0.06"

HOFFMAN CSD SERIES & SAGINAW SCE SERIES
METALLIC ENCLOSURES

MODEL	A	B	C	D	E	F	G	H	I
SS-2010AL	20"	12"	7.5"	18.5"	4.5"	0.44"	2"	23.46"	13.73"
SS-2410AL	24"	12"	7.5"	22.5"	4.5"	0.44"	2"	27.46"	13.73"
SS-2412AL	24"	14"	7.5"	22.5"	4.5"	0.44"	2"	27.46"	15.73"
SS-3010AL	30"	12"	7.5"	28.5"	4.5"	0.44"	2"	33.46"	13.73"
SS-3012AL	30"	14"	7.5"	28.5"	4.5"	0.44"	2"	33.46"	15.73"

Drawing Title	Project Title	NO.	REVISION	APPROVED BY	Cox Research and Technology, Inc.	DATE
ALUMINUM SUN SHIELD	GENERAL ARRANGEMENT HOFFMAN & SAGINAW SUN SHIELD	Sales Engineer N/A	Application Engineer C.C.	Drawn By JCF	P.O. Box 77808 Baton Rouge, LA 70879 Ph. (225)756-3271 Fax (225)756-1030	08/21/25 DRAWING NUMBER HOFFMAN & SAGINAW GENERAL SHEET NUMBER 1