IPT® Charge Horizontal 20 kHz

ENRX IPT

Monitoring Unit outdoor

IP54 400 V Cabinet with concrete base



TECHNICAL DATA

Electrical

Power	100 kW
Input current	224 A
Voltage	400 V
Protection class (DIN EN 60417)	II

Cooling

Cabinet air supply	Forced air ventilation (205 m³/h)

Environmental conditions

Temperature range	-40 °C - +80 °C
Fire behavior (DIN 4102)	Class B2

Enclosure

IP classification	IP54 (DIN EN 60529)
Material housing	Fiberglass reinforced polyester resin
Material base	Lightweight concrete
Colour cabinet	Optional, standard color: RAL 7035
Doors	Double doors
Hinge	Stainless steel A2, internal
Door closing	Three-point locking system with weatherproof pan bar

Chemical resistance	Resistant against mineral oils, grease, gasoline, Lithium grease, 15% hydrochloric acid. All chemical influences must be checked.

ORDER NUMBERS / VARIANTS

Item	Description	Technical data
4180140	Monitoring Unit outdoor	IP54 400 V Cabinet with concrete base

DIMENSIONS

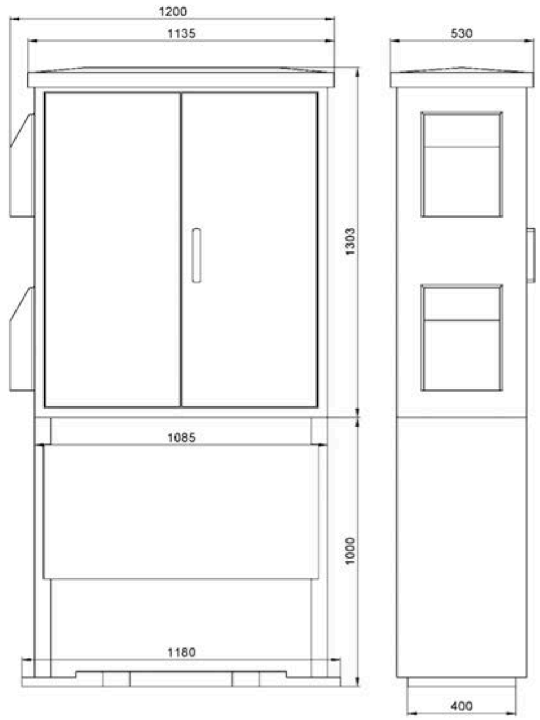

Cable entries from the bottom of the cabinet. Ensure sufficient depth running the cables (anchoring depth base: min. 750 mm).

Complementary products

- Charge Module 100 kW, 400 V, e.g. 4140010
- In-Ground Module, e.g. 4140006/4140002
- F-Pickup 50 kW - 600 V - 83 A, e.g. 4150247
- Track Supply 100 kW, e.g. 4180005-DIGI2
- Monitoring Unit, indoor, e.g. 4140011
- Cooling System, e.g. 4160049
- Remote Battery Charging Interface 600 V, e.g., 4160107
- Rectifier 50 kW - 600 V - 83 A, e.g. 4160110
- Terminal box e.g. 4180006 (optional)
- Litz cable, e.g. 4140028

EXAMPLE CONNECTION MONITORING UNIT

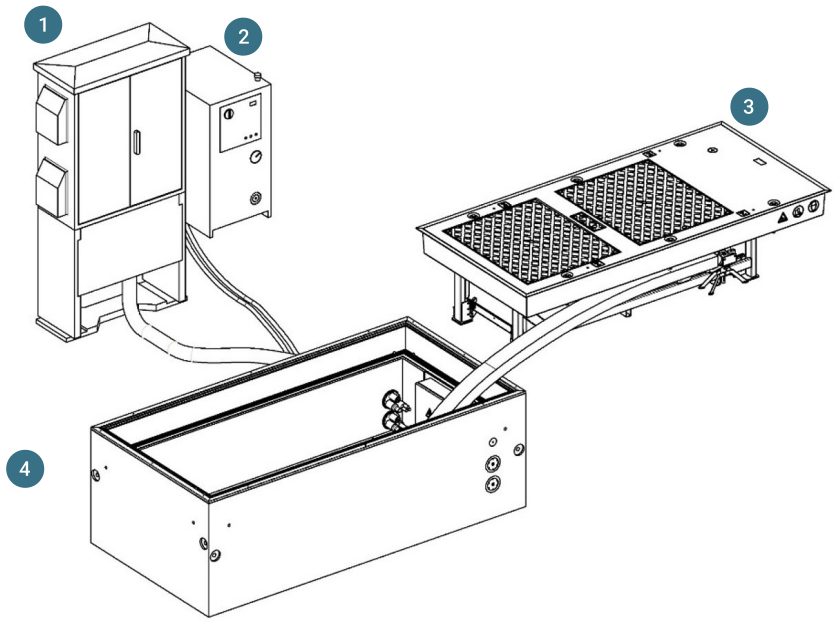

(1) Monitoring Unit (2) Cooling System (3) Charge Module (4) In-Ground Module

FUNCTIONAL DIAGRAM

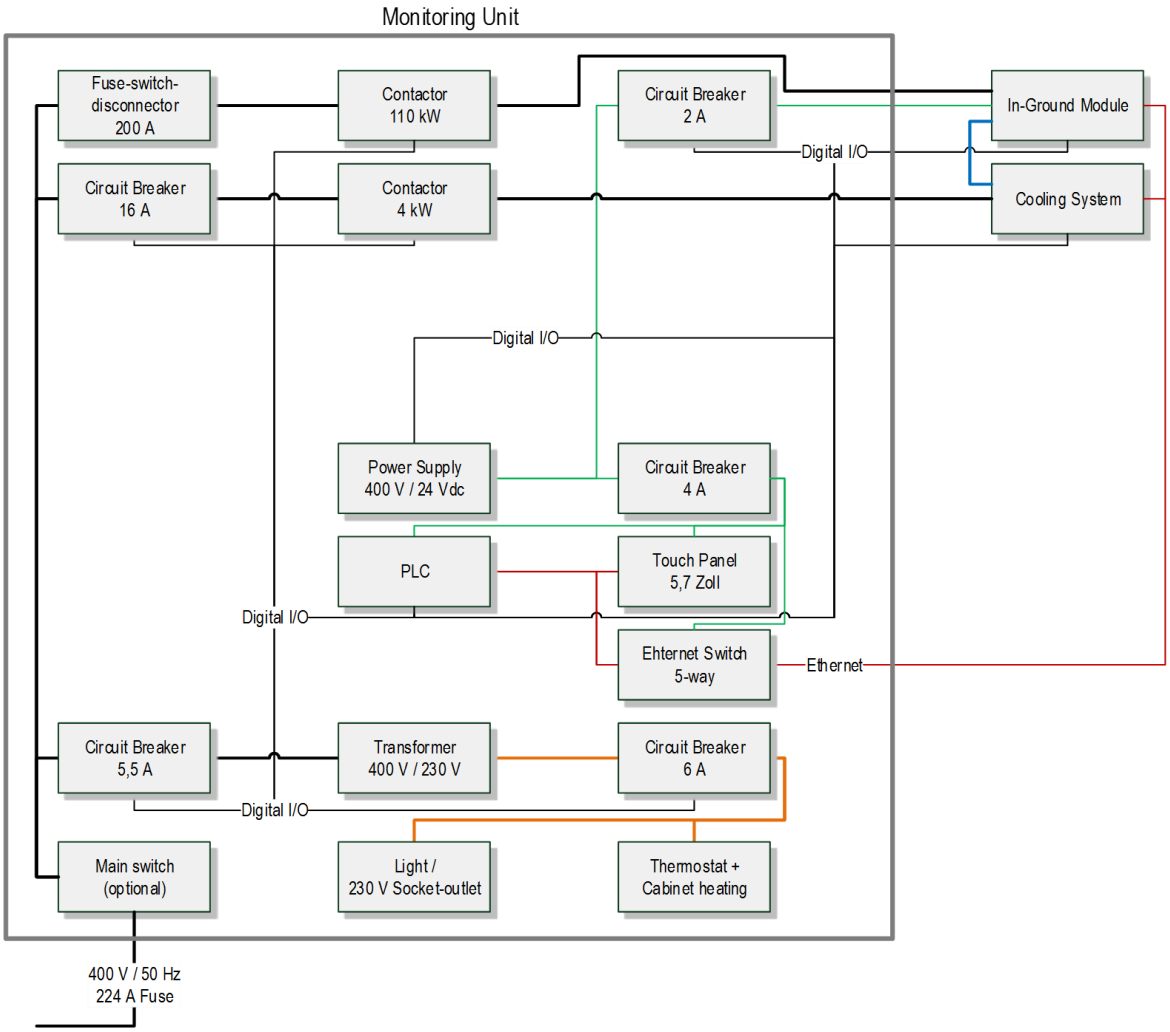



The product specifications and illustrations presenting on this datasheet are indicative and can be changed at any time. It is also possible, if technically feasible, to make adjustments based on your specific wishes.

TECHNICAL DATA SHEET

IPT® Charge Horizontal 20 kHz

ENRX IPT

Monitoring Unit indoor

100 kW



TECHNICAL DATA

Electrical

Power	100 kW
Input current	224 A
Voltage	400 V +/- 10% Protection provided by customer typically 250 A
Switch indoor	Switch disconnector for fuse 250 A, size 3.3-pole, delivered with fuse 224 A
Max. no of Charge Modules	1 x 100 kW

Features

HMI	Touchpanel
Additional features	Heating, router

Cabinet

Cabinet	Rittal standard cabinet Sheet Metal
Colour cabinet standard	RAL 7035
Protection class	IP54
Weight	~ 200 kg
Doors	Double doors
Door closing	3 mm double-bit
Cabinet air supply	Forced air ventilation (205 m³/h)

Environmental conditions

Temperature range	-30 °C - +45 °C

Chemical resistance	Resistant against mineral oils, grease, gasoline, Lithium grease, 15% hydrochloric acid. All chemical influences must be checked.

ORDER NUMBERS / VARIANTS

Item	Description	Technical data
4140011	Monitoring Unit indoor	100 kW

DIMENSIONS

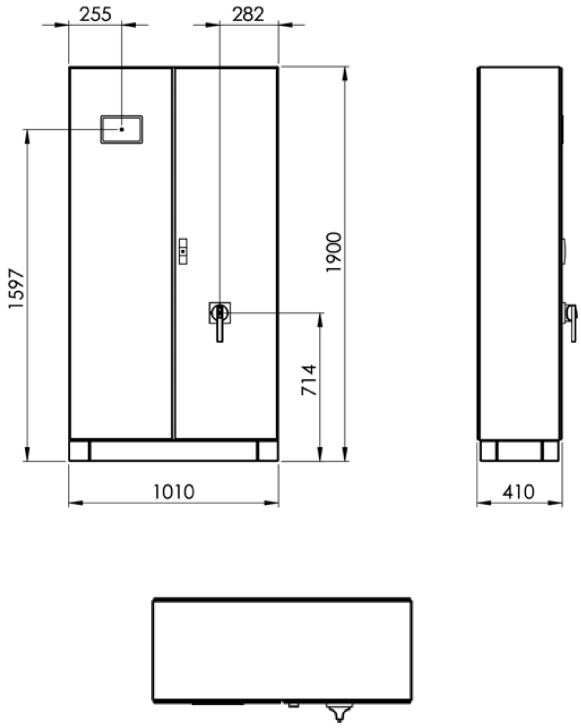

Complementary products

Charge Module 100 kW, 400 V, e.g. 4140010
In-Ground Module, e.g. 4140006/4140002
F-Pickup 50 kW - 600 V - 83 A, e.g. 4150247
Track Supply 100 kW, e.g. 4180005-DIGI2
Monitoring Unit outdoor, e.g. 4180140
Cooling System, e.g. 4160049
Remote Battery Charging Interface 600 V, e.g., 4160107
Rectifier 50 kW - 600 V - 83 A, e.g. 4160110
Terminal box e.g. 4180006 (optional)
Litz cable, e.g. 4140028

EXAMPLE CONNECTION MONITORING UNIT

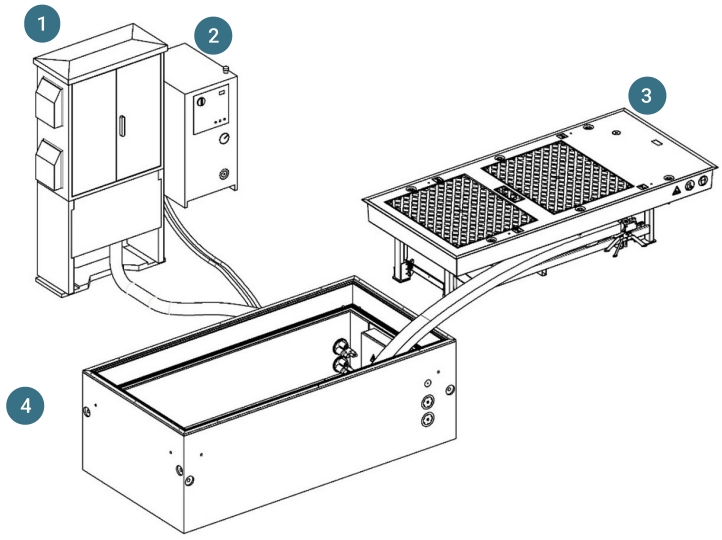

(1) Monitoring Unit (2) Cooling System (3) Charge Module (4) In-Ground Module

FUNCTIONAL DIAGRAM

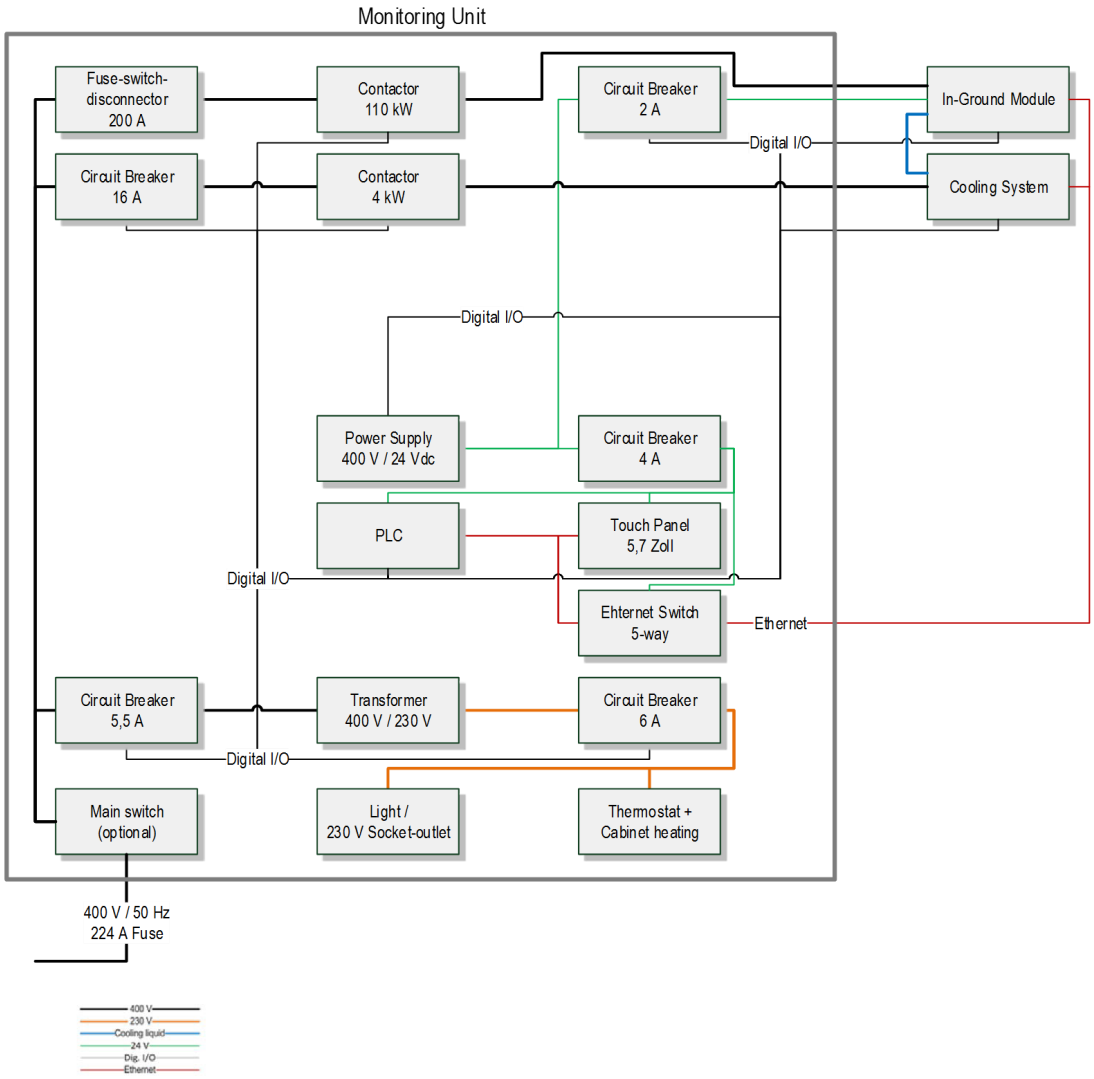



The product specifications and illustrations presenting on this datasheet are indicative and can be changed at any time. It is also possible, if technically feasible, to make adjustments based on your specific wishes.

IPT® Charge Horizontal 20 kHz

ENRX IPT

In-ground Module A & B

A: 4140006 · B: 4140002



TECHNICAL DATA

General

Cable bushings	2 x type KD110
Lifting points	2 on each side

Dimensions

Outside dimensions	3100 x 1550 x 1030 mm
Weight	5.300 kg

Housing

Pre-mounted	Terminal box, energy guid. chain, sealing
Type	Steel reinforced concrete structure
Resistance (concrete)	XC4, WF

Chemical resistance	Resistant against mineral oils, grease, gasoline, Lithium grease, 15% hydrochloric acid. All chemical influences must be checked.

ORDER NUMBERS / VARIANTS

Item	Description	Technical data
4140006	In-ground Module, version A	Supply & cooling hoses (left hand side)
4140002	In-ground Module, version B	Supply & cooling hoses (right hand side)

VERSIONS

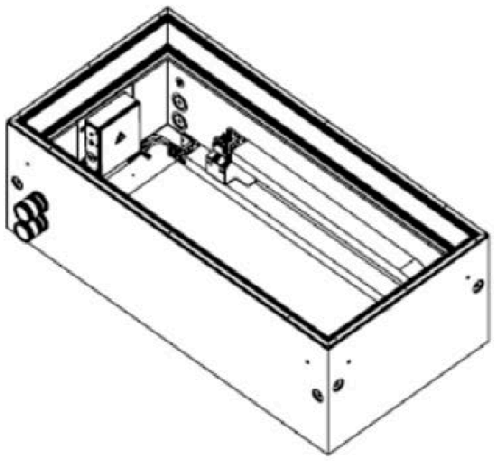

Version A · supply & cooling hoses (left hand side)

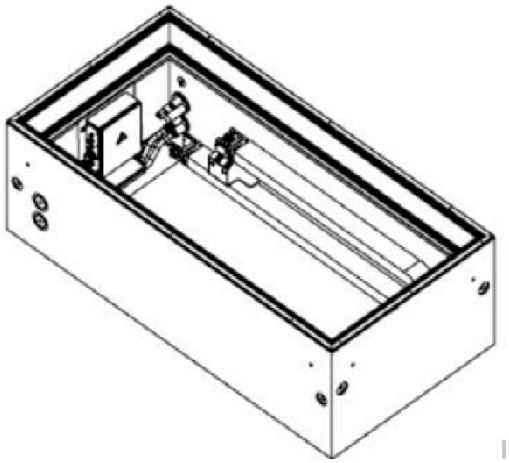

Version B · supply & cooling hoses (right hand side)

Complementary products

Charge Module 100 kW, 400 V, e.g. 4140010
F-Pickup 50 kW - 600 V - 83 A, e.g. 4150247
Track Supply 100 kW, e.g. 4180005-DIGI2
Monitoring Unit, (outdoor/indoor), e.g. 4140011/4180140
Cooling System, e.g. 4160049
Remote Battery Charging Interface 600 V, e.g., 4160107
Rectifier 50 kW - 600 V - 83 A, e.g. 4160110
Terminal box e.g. 4180006 (optional)
Litz cable, e.g. 4140028

INSTALLATION EXAMPLE IN-GROUND MODULE



(1) Excavation with connection to grid



(2) In-Ground Module installed



(3) Charge Module connected

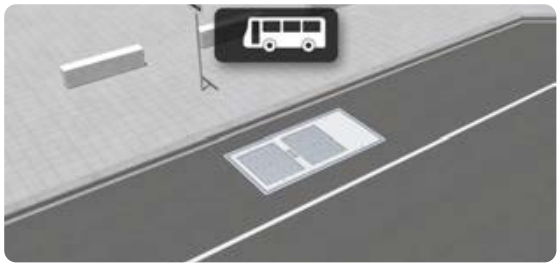

(4) Finished Charge Station

EXAMPLE CONNECTION MONITORING UNIT

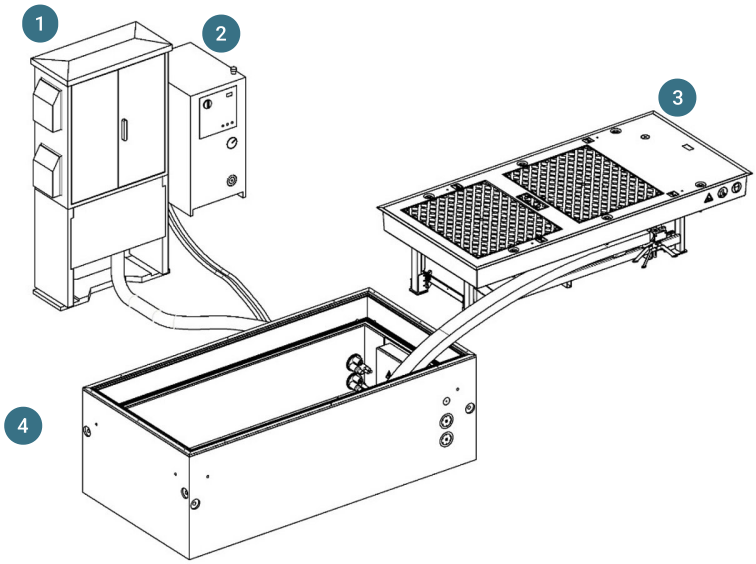

(1) Monitoring Unit (2) Cooling System (3) Charge Module (4) In-Ground Module

DIMENSION VERSION A

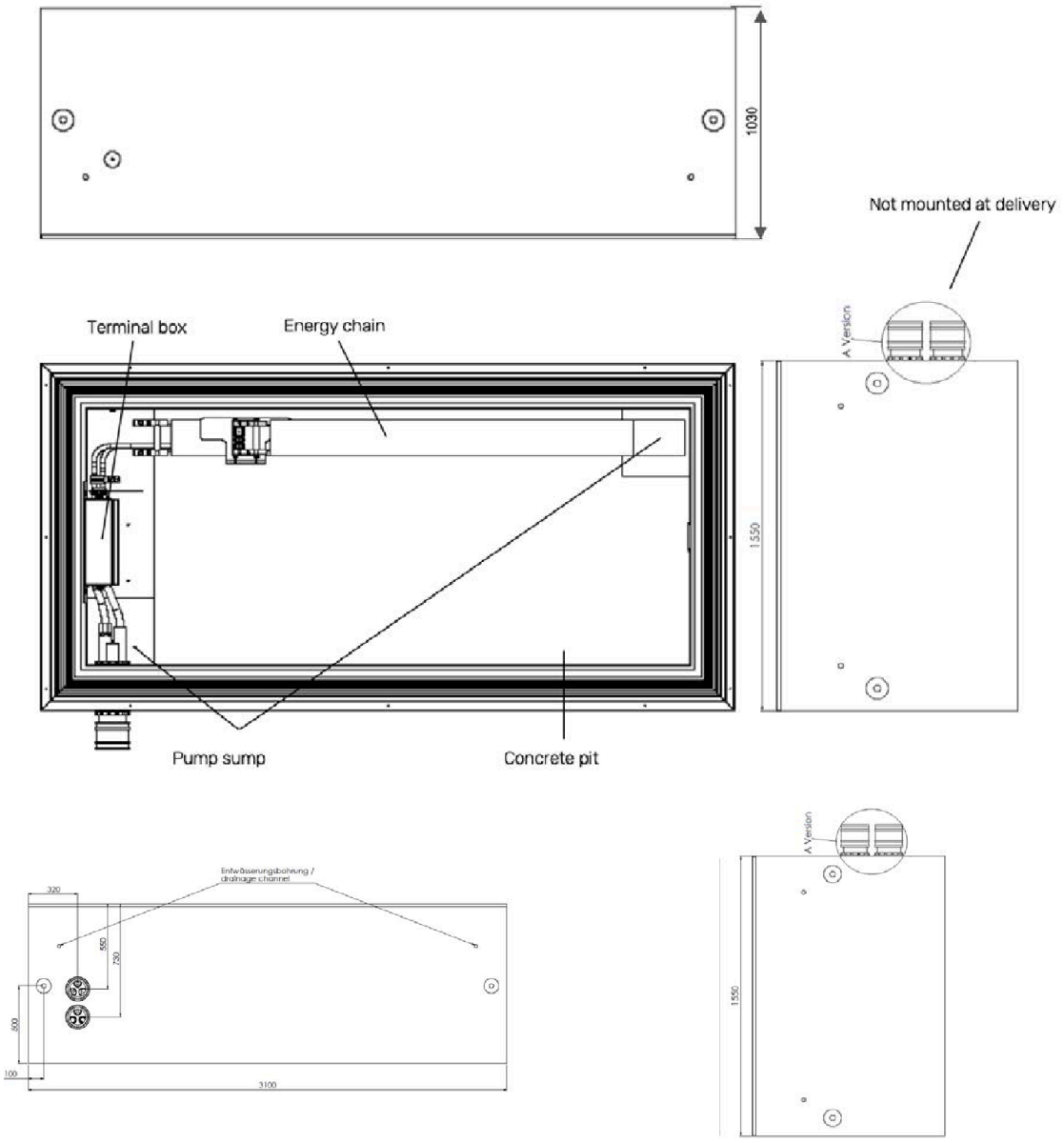

Version A · Not mounted at delivery

DIMENSION VERSION B

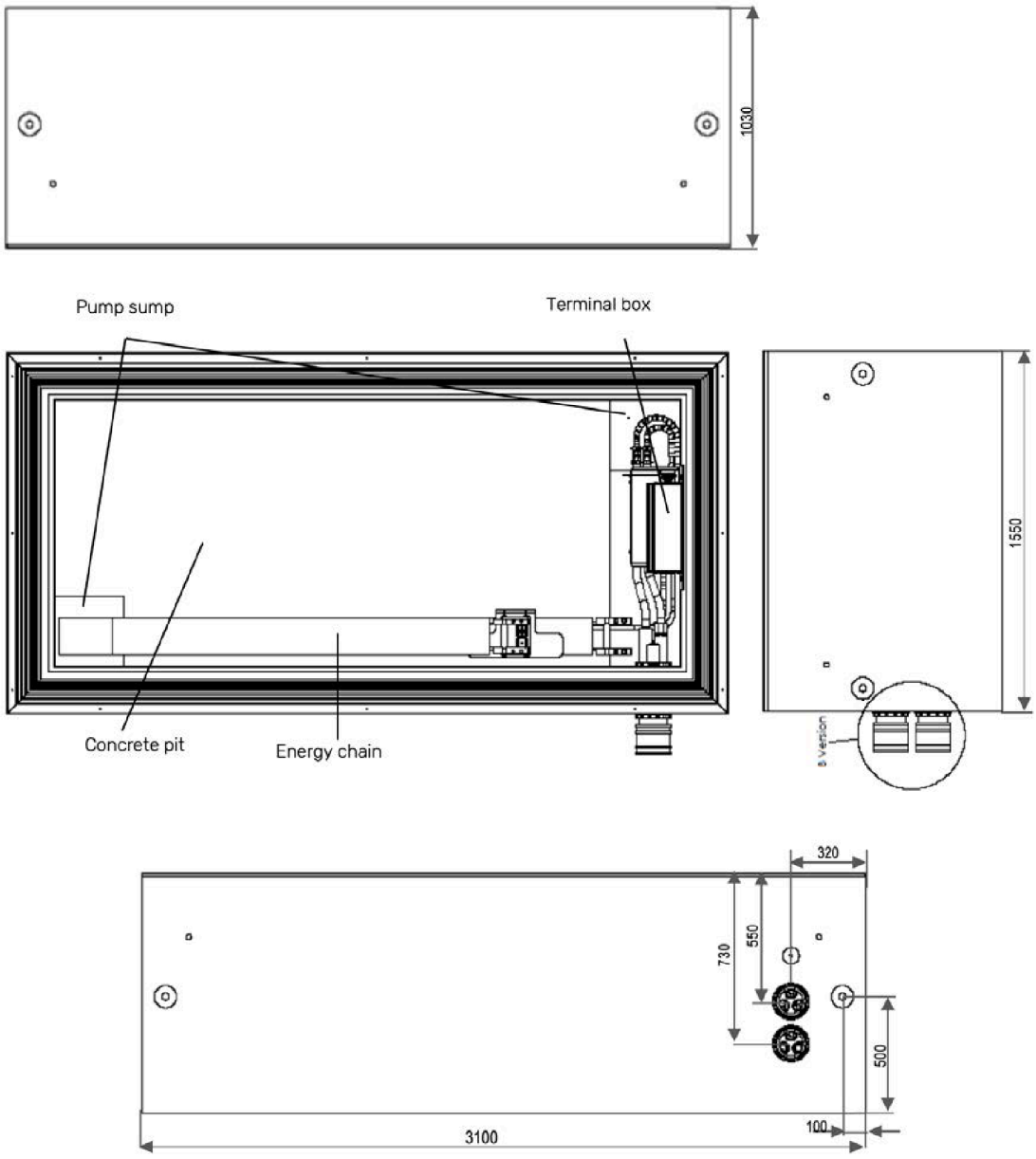

Energy Chain · Concrete pit · Version B · Not mounted at delivery

INSTALLATION EXAMPLE 100 KW

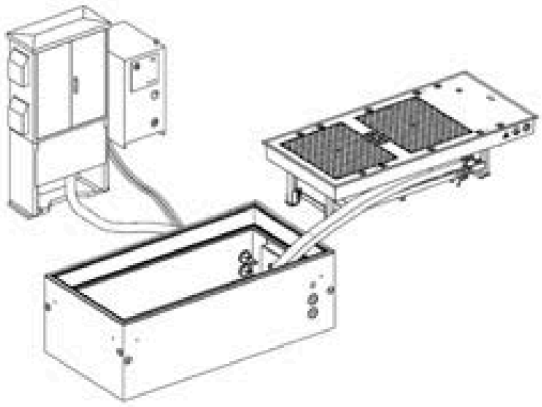

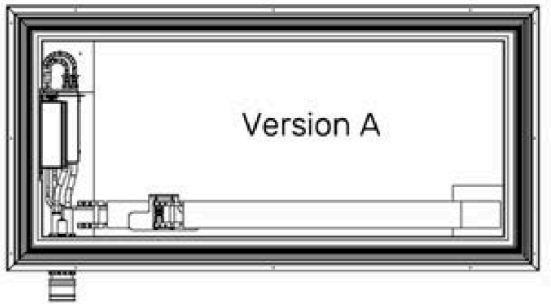

INSTALLATION EXAMPLE - 200 KW

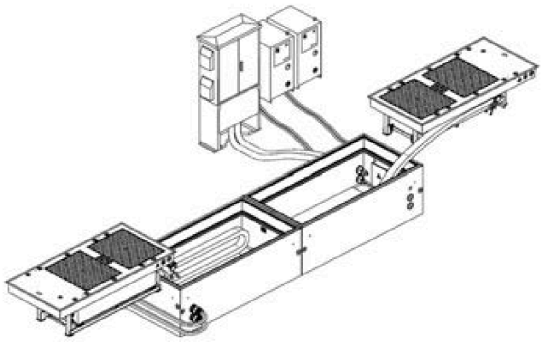

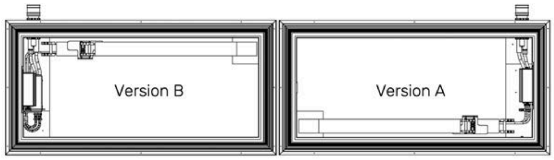

A charging station with 200 kW consists of two In-Ground Modules. In that case, version A and B are needed.



The product specifications and illustrations presenting on this datasheet are indicative and can be changed at any time. It is also possible, if technically feasible, to make adjustments based on your specific wishes.

TECHNICAL DATA SHEET

IPT® Charge Horizontal 20 kHz

ENRX IPT

Charge Module

100 kW, 400 V



TECHNICAL DATA

Electrical

Output power	100 kW
Current consumption	400 V: 170 A +/- 10%
Starting current	< 25 A
Data interfaces	Ethernet, Digital inputs/outputs, Wireless data transmission
Efficiency at rated load	> 93% for Charge Module
Power factor	typ. 0,89 – 0,92
Auxiliary supply	24 V 1 A

Mechanical data

Dimensions	2990 x 1440 x 811 mm
Weight	2900 kg
Max. wheel load centre	6000 kg

Housing

Protection class	IP67 (if plugs are in place)
Lifting points	4 on top side
Pre-mounted	Track Supply, Steel Support, Road Pad and 2 Charge Pads 50 kW

Climate

Ambient temperature operation	-20° C – +45° C
Connection cooling liquid	2 self-sealing couplings

Chemical resistance	Resistant to acid, bases, salts and saline solutions, alcohols, oil, grease, waxes and many solvents (except for methyl alcohol, acetone and strongly oxidizing media such as nitric acid, chromic acid, halogens)

ORDER NUMBERS / VARIANTS

Item	Description	Technical data
4140010	Charge Module	100 kW, 400 V

DIMENSIONS

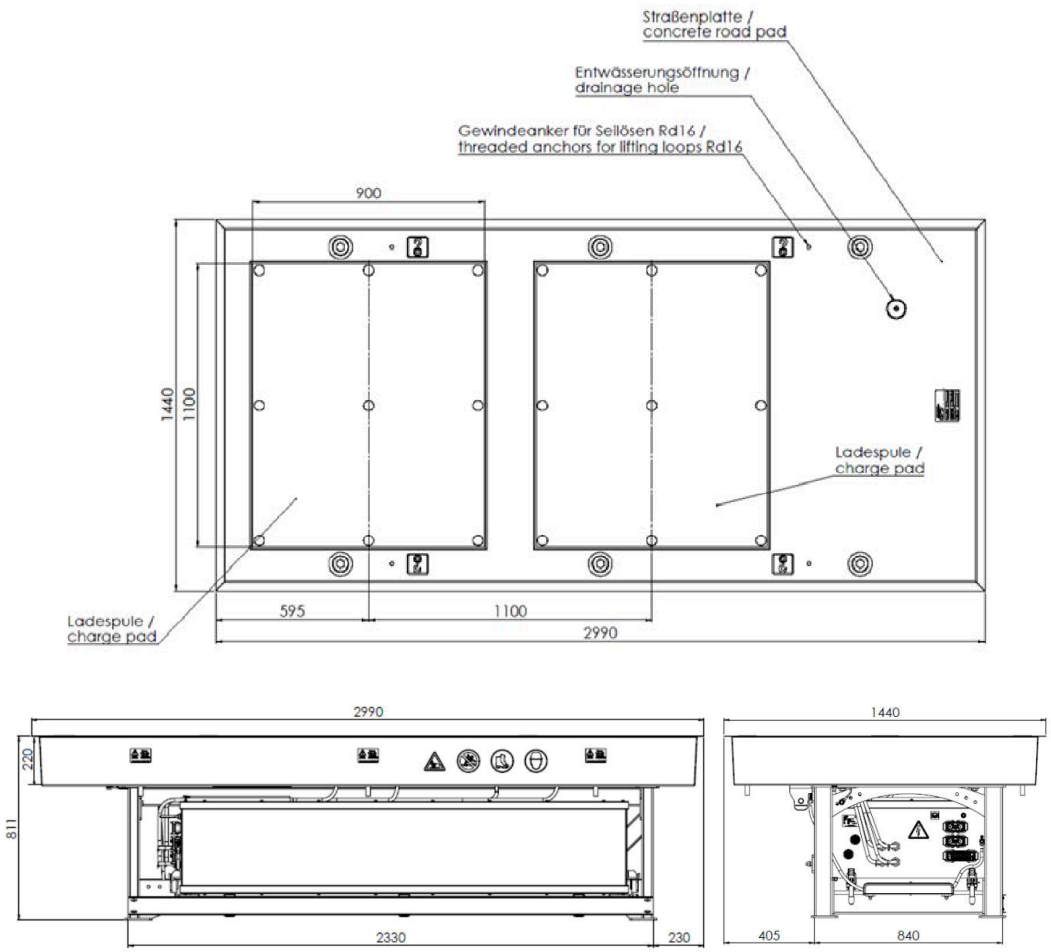

Complementary products

In-Ground Module, e.g. 4140006/4140002
F-Pickup 50 kW - 600 V - 83 A, e.g. 4150247
Track Supply 100 kW, e.g. 4180005-DIGI2
Monitoring Unit, (outdoor/indoor), e.g. 4140011/4180140
Cooling System, e.g. 4160049
Remote Battery Charging Interface 600 V, e.g., 4160107
Rectifier 50 kW - 600 V - 83 A, e.g. 4160110
Terminal box e.g. 4180006 (optional)
Litz cable, e.g. 4140028

INSTALLATION EXAMPLE GROUND CHARGER



(1) Excavation with connection to grid



(2) In-Ground Module installed



(3) Charge Module connected



(4) Finished Charge Station

EXAMPLE CONNECTION MONITORING UNIT

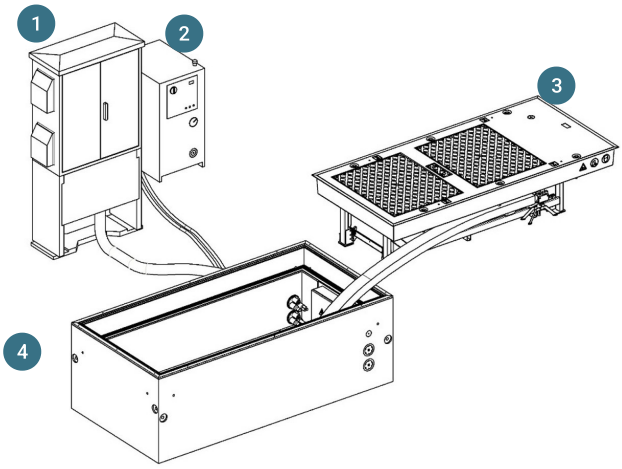

(1) Monitoring Unit (2) Cooling System (3) Charge Module (4) In-Ground Module



The product specifications and illustrations presenting on this datasheet are indicative and can be changed at any time. It is also possible, if technically feasible, to make adjustments based on your specific wishes.

TECHNICAL DATA SHEET

IPT® Charge Horizontal 20 kHz

ENRX IPT

F-Pickup

50 kW - 600 V - 83 A

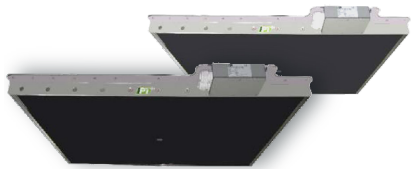

INSTALLED IN PAIRS 2 × 50 kW = 100 kW per charging point

TECHNICAL DATA

VALUES PER UNIT

Electrical

Nominal power	50 kW
Output current	Max. 83 A
Nominal voltage	600 V
Duty cycle	100%
Primary side current	125 A 20 kHz

Tolerances

Tolerance lateral	+/- 50 mm
Tolerance vertical	+/- 10 mm
Longitudinal	+/- 50 mm
Distance to road surface	150 mm

General

Perm. ambient temperature	-20 °C - +45 °C
Protection class	IP67

Connection

Connection electrical	Cable lug 70 mm² - M8
Type of connection cable	High frequency IPT Litz cable required (not included)
Connection type	Junction Box

Chemical resistance	Resistant against mineral oils, grease, gasoline, Lithium grease, 15% hydrochloric acid. All chemical influences must be checked.

ORDER NUMBERS / VARIANTS

Item	Description	Technical data	Qty per charging point
4150247	F-Pickup	50 kW - 600 V - 83 A	2

DIMENSIONS

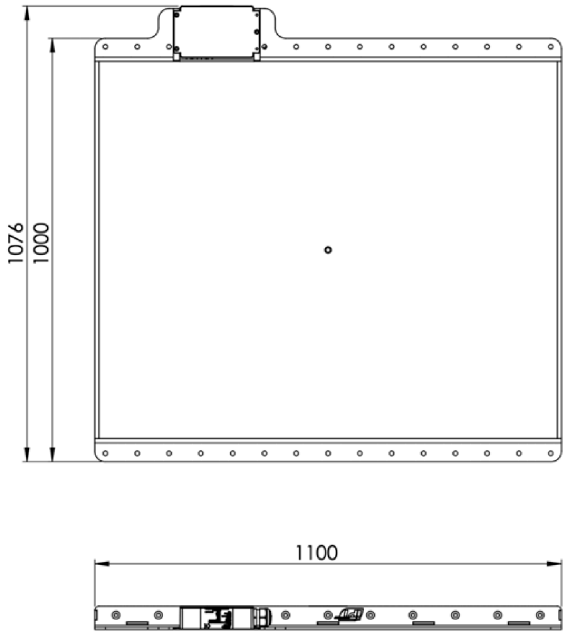

Note

Parameters (current, frequency) of the primary side must match the specifications of the Pickup

Complementary products

In-Ground Module, e.g. 4140006/4140002
Charge Module 100 kW, 400 V, e.g. 4140010
Track Supply 100 kW, e.g. 4180005-DIGI2
Monitoring Unit, (outdoor/indoor), e.g. 4140011/4180140
Cooling System, e.g. 4160049
Remote Battery Charging Interface 600 V, e.g., 4160107
Rectifier 50 kW - 600 V - 83 A, e.g. 4160110
Terminal box e.g. 4180006 (optional)
Litz cable, e.g. 4140028

DETAIL DIMENSIONS

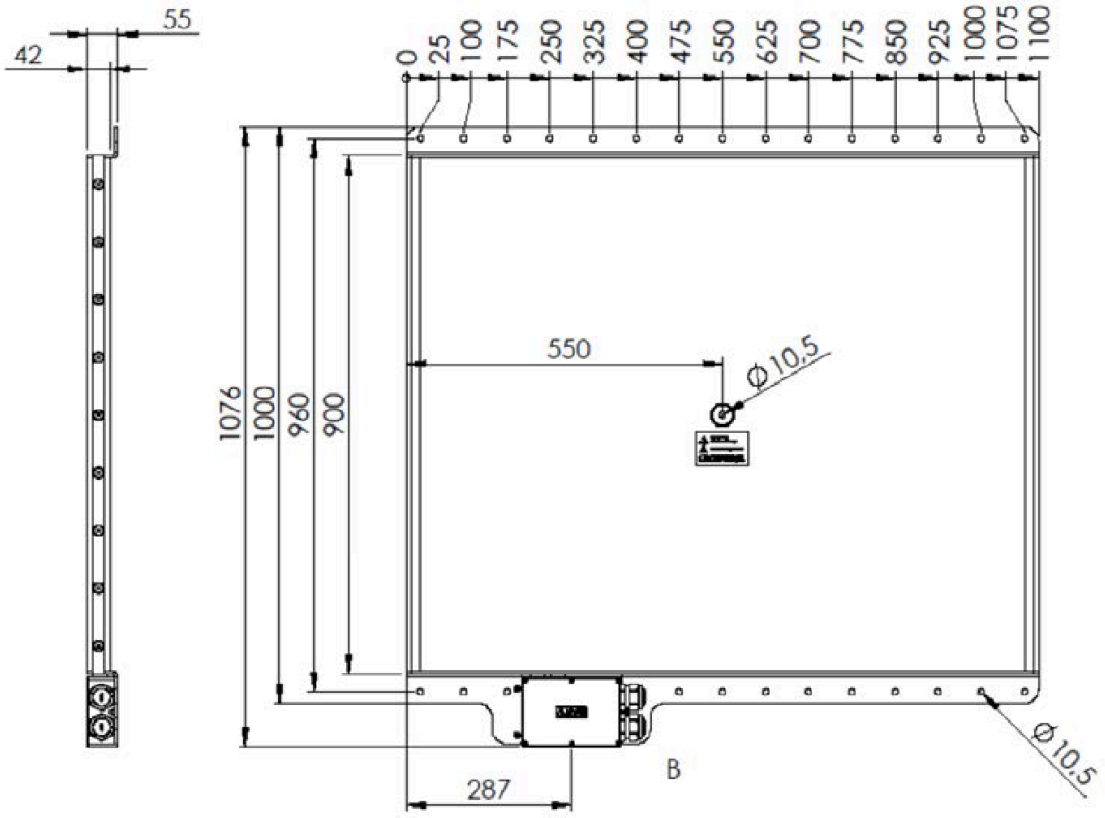



The product specifications and illustrations presenting on this datasheet are indicative and can be changed at any time. It is also possible, if technically feasible, to make adjustments based on your specific wishes.

TECHNICAL DATA SHEET

IPT® Charge Horizontal 20 kHz

ENRX IPT

Rectifier

50 kW - 600 V - 83 A



TECHNICAL DATA

Electrical

Nominal power	50 kW
Output current	Max. 83 A
Voltage range	400 – 700 V DC
Duty cycle (with cooling)	100%
Cooling	Liquid cooled
Protection class (if plugs are in place)	IP65

Mechanical

Perm. ambient temperature	-20 °C - +45 °C
Dimensions (box w/o plugs)	600 x 310 x 110 mm
Weight	27,5 kg

Connections

Conn. input, electrical	Cable lug 70 mm²- M8
Conn. output, electrical	HVP800 2-pol header
Connection control signals (CAN, dig. I/O)	cDT04-12PA-LE01 12-pol header
Ground terminal	PEBZ M10 KTB S4 SET
Connection coolant	Outer diameter 0.64 inch (16.3 mm)

Chemical resistance	Resistant against mineral oils, grease, gasoline, Lithium grease, 15% hydrochloric acid. All chemical influences must be checked.

ORDER NUMBERS / VARIANTS

Item	Description	Technical data
4160110	Rectifier	50 kW - 600 V - 83 A

DIMENSIONS

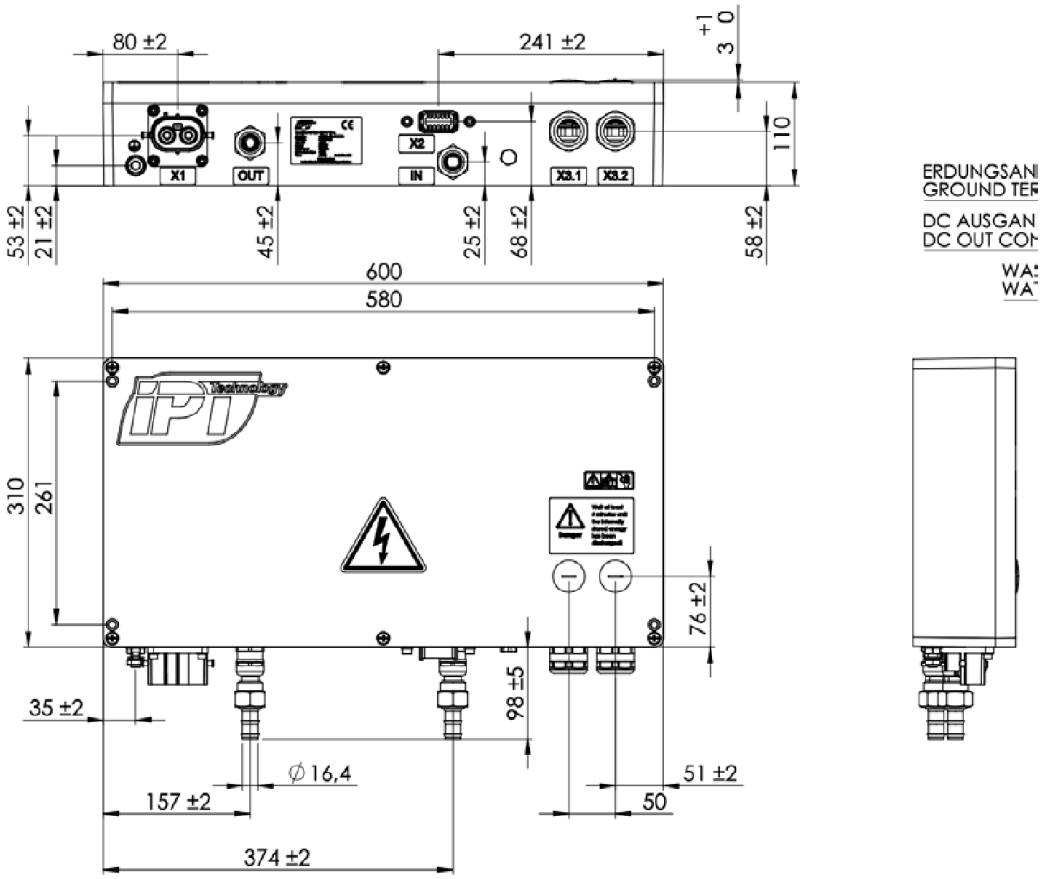

Complementary products

Charge Module 100 kW, 400 V, e.g. 4140010
In-Ground Module, e.g. 4140006/4140002
F-Pickup 50 kW - 600 V - 83 A, e.g. 4150247
Track Supply 100 kW, e.g. 4180005-DIGI2
Monitoring Unit, (outdoor/indoor), e.g. 4140011/4180140
Cooling System, e.g. 4160049
Remote Battery Charging Interface 600 V, e.g., 4160107
Terminal box e.g. 4180006 (optional)
Litz cable, e.g. 4140028

CONNECTIONS

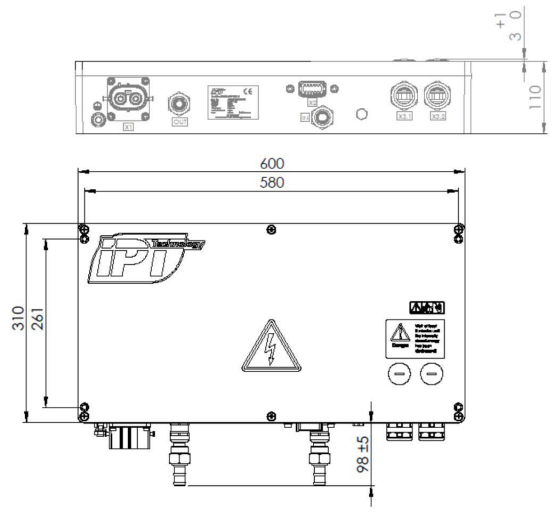

Pickup cables
Water in
Ground terminal
Water out
DC out connector

EXAMPLE: PARAMETER SETTING

CAN ID of status message (device 1)	18FF58F5h
CAN ID of status message (device 2)	18FF58F6h
CAN ID of status message (device 3)	18FF58F7h
CAN ID of status message (device 4)	18FF58F8h
CAN ID of status message (device 5)	18FF58F9h
CAN ID of status message (device 6)	18FF58FAh
CAN ID EEPROM access	185h
CAN endianness	Intel
CAN speed	250 kbps
CAN identifier format	Extended
Message cycle time	20 ms
Maximum battery voltage	760 V
Maximum capacitor temperature	70 °C
Maximum diode heatsink temperature	70 °C



The product specifications and illustrations presenting on this datasheet are indicative and can be changed at any time. It is also possible, if technically feasible, to make adjustments based on your specific wishes.

IPT® Charge Horizontal 20 kHz

ENRX IPT

Remote Battery Charging Interface

600 V (RBCI)



TECHNICAL DATA

General

Dimensions	362 x 125 x 81 mm (without plugs)
Colour	Grey RAL 7001
Weight	3,5 kg
Operating temperature	-20 °C - +45 °C
Protection class	IP65 (if plugs are in place)

Electrical

Supply voltage	24 V DC
Current consumption	< 0,5 A (up to 1.5 A inrush current)
Output voltage	+ 12 V DC for modem

Interfaces

Interfaces	1 x CAN 2.0B (29-bit Identifier) 2 x RS232 1 x digital input (optically isolated) 3 x digital inputs (not isolated) 1 x reset input (not isolated) 1 x error output

Chemical resistance	Resistant against mineral oils, grease, gasoline, Lithium grease, 15% hydrochloric acid. All chemical influences must be checked.

ORDER NUMBERS / VARIANTS

Item	Description	Technical data
4160107	Remote Battery Charging Interface	600 V (RBCI)

DIMENSIONS

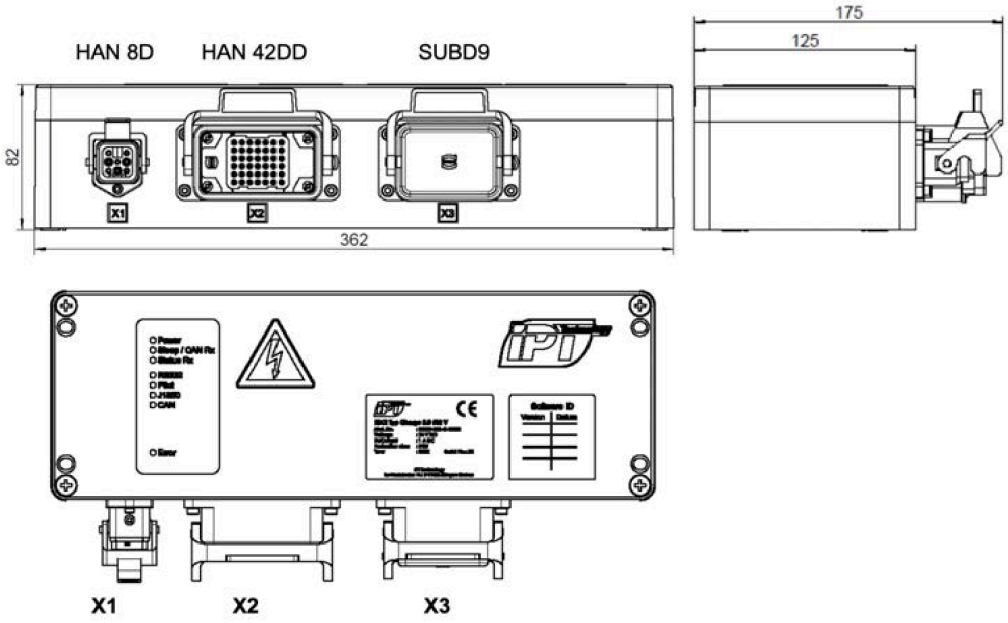

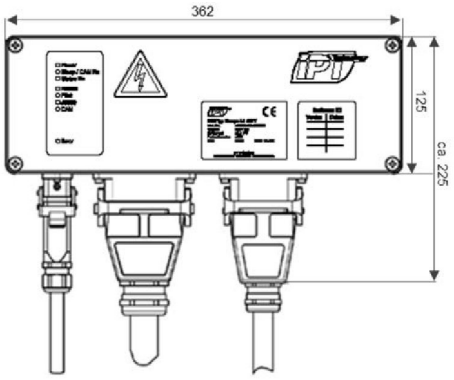

Plugs not included in delivery and may deviate from the actual product.

Complementary products

Charge Module 100 kW, 400 V, e.g. 4140010
In-Ground Module, e.g. 4140006/4140002
F-Pickup 50 kW - 600 V - 83 A, e.g. 4150247
Track Supply 100 kW, e.g. 4180005-DIGI2
Monitoring Unit, (outdoor/indoor), e.g. 4140011/4180140
Cooling System, e.g. 4160049
Rectifier 50 kW - 600 V - 83 A, e.g. 4160110
Terminal box e.g. 4180006 (optional)
Litz cable, e.g. 4140028

EXAMPLE: PARAMETER -S001 SETTING

Minimum battery voltage [bits]	26214 (=400 V)
Maximum battery voltage [bits]	51773 (=790 V)
Maximum battery current [bits]	23593 (=180 A)
Status message scales for voltage and current	1 (=Charge 3.0)
Configuration	0xFF
CAN endianness	1 (=Intel)
CAN speed [kbps]	1 (=250)
CAN identifier format	1 (=Extended)
CAN ID BMS pack summary	18FF5CF7h
CAN ID BMS charger control	18FF5BF7h
CAN ID EVSE status	18FF5AF7h
CAN ID EEPROM access	1FFFFFFFh (=disabled)
CAN ID Rectifier 1	18FF58F5h
CAN ID Rectifier 2	18FF58F6h

The RBCI is available in different interface configurations. These are identified by an extension of the part-number (-Sxxx). Different versions are available on request.



The product specifications and illustrations presenting on this datasheet are indicative and can be changed at any time. It is also possible, if technically feasible, to make adjustments based on your specific wishes.

TECHNICAL DATA SHEET

IPT® Charge Horizontal 20 kHz

ENRX IPT

Cooling System

Rittal



TECHNICAL DATA

Performance

Cooling output at TW = 18°C, TAmb = 32°C	5040 kW
Power consumption of pump at 4 bar pressure	870 W
Tank heater	1000 W
Pumping capacity	15 l/min
Delivery press. external	3 – 5.8 bar
Air volume of fans	3140 m³/h
Noise level	69 dB(A)

Electrical

Rated voltage	400 V, 50 Hz, (3~ + PE)
Current consumption	6.9 A
Starting current	30.8 A

Environment

Temperature range ambient	-20 °C - +45 °C

Mechanical

Tank volume	57 l
Weight	141 kg
Dimensions	595 x 1180 x 800 mm
Colour	RAL 7035 WS
Water connections	1“ IG/1“ Intern. screw head
Connection for coolant hoses	1 Inch
Refrigerant	R134a

Interfaces

Fault output	Potential-free contact
Interfaces	Ethernet (web server, e-mail, logger)
Protection class	IP44
Chemical resistance	Accord. to Rittal
Corrosion resistance	Accord. to Rittal

Never use coolants which contain glysantin, they corrode the seals of the system! Always respect the mixing ratio of the manufacturer. When using another cooling system than Rittal, please observe the manufacturer information. IPT recommends using Rifrost Outdoor by Rittal.

DIMENSIONS

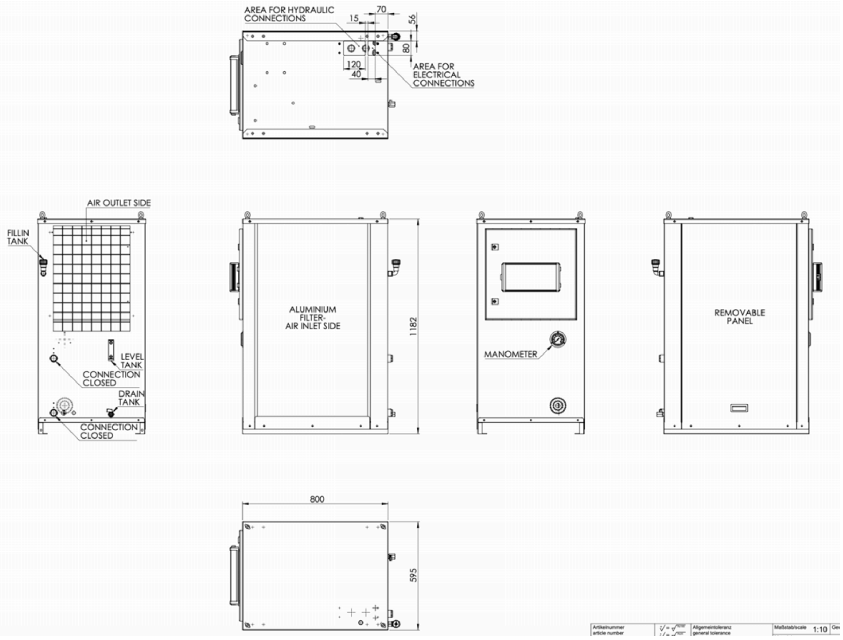

This device can both heat and cool. Cooling systems from other suppliers are possible.

Source: Rittal GmbH & Co. KG

Complementary products

Charge Module 100 kW, 400 V, e.g. 4140010
In-Ground Module, e.g. 4140006/4140002
F-Pickup 50 kW - 600 V - 83 A, e.g. 4150247
Track Supply 100 kW, e.g. 4180005-DIGI2
Monitoring Unit, (outdoor/indoor), e.g. 4140011/4180140
Remote Battery Charging Interface 600 V, e.g., 4160107
Rectifier 50 kW - 600 V - 83 A, e.g. 4160110
Terminal box e.g. 4180006 (optional)
Litz cable, e.g. 4140028

ORDER NUMBERS / VARIANTS

Item	Description	Technical data
4160049	Cooling System	Rittal

EXAMPLE CONNECTION MONITORING UNIT

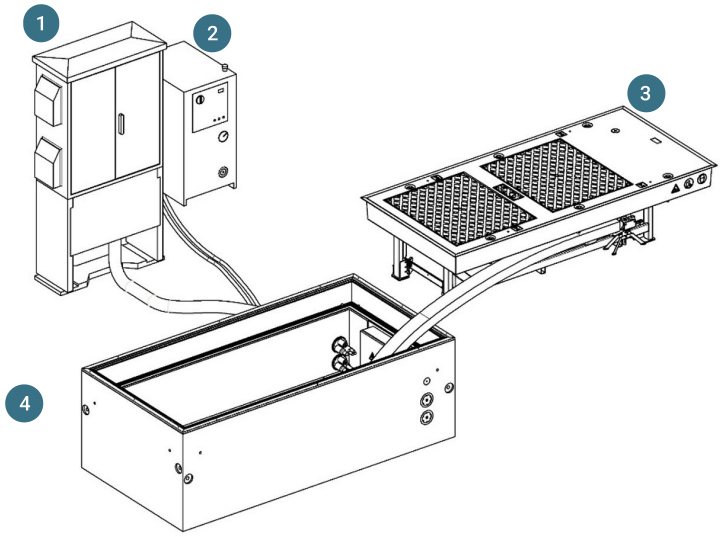

(1) Monitoring Unit (2) Cooling System (3) Charge Module (4) In-Ground Module

PLACING

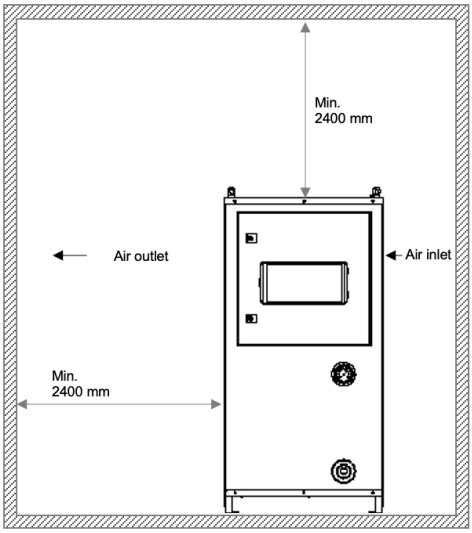

Ensure sufficient space for air intake and the outgoing air. See here the recommended minimum distance between each side of the cooling system

Air inlet side

Alternative air inlet side (configurable)

Air outlet back side



The product specifications and illustrations presenting on this datasheet are indicative and can be changed at any time. It is also possible, if technically feasible, to make adjustments based on your specific wishes.

IPT® Charge Horizontal 20 kHz

ENRX IPT

Litz Cable



70 mm²

TECHNICAL DATA

Cable

Type of cable	Litz cable
Conductor class	Flexible according to IEC EN 60228 class 5
Cross-section	70 mm²
Min. outer diameter	19,5 mm
Max. outer diameter	21,5 mm
Min. bending radius (fixed installation)	100 mm

Electrical

Current carrying capacity	250 A at 20 kHz
Max. operating voltage	1000 V
Testing voltage	4000 V / 5 min

Insulation

Insulation (outer)	TPE-U
Colour of insulation	Orange
Flame-retardant	IEC 60332-1-2

Ambient conditions

Operating temperature	-40° C – +90° C
Ambient conditions	For permanent use in water

Chemical resistance	Resistant against mineral oils, grease, gasoline, cooling liquids, acids + bases up to 15 %. All other chemical influences must be checked.

ORDER NUMBERS / VARIANTS

Item	Description	Technical data
4140028	Litz Cable	70 mm²

DIMENSIONS

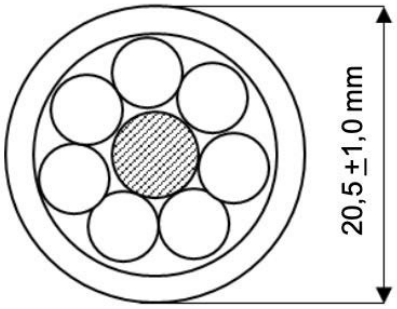

The Litz Cable serves solely to connect F-Pickup 50 kW (e.g. 4150247) to Rectifier 50 kW (4160110).

Complementary products

Charge Module 100 kW, 400 V, e.g. 4140010
In-Ground Module, e.g. 4140006/4140002
F-Pickup 50 kW - 600 V - 83 A, e.g. 4150247
Track Supply 100 kW, e.g. 4180005-DIGI2
Monitoring Unit, (outdoor/indoor), e.g. 4140011/4180140
Cooling System, e.g. 4160049
Remote Battery Charging Interface 600 V, e.g., 4160107
Rectifier 50 kW - 600 V - 83 A, e.g. 4160110
Terminal box e.g. 4180006 (optional)

DETERMINE CABLE LENGTH

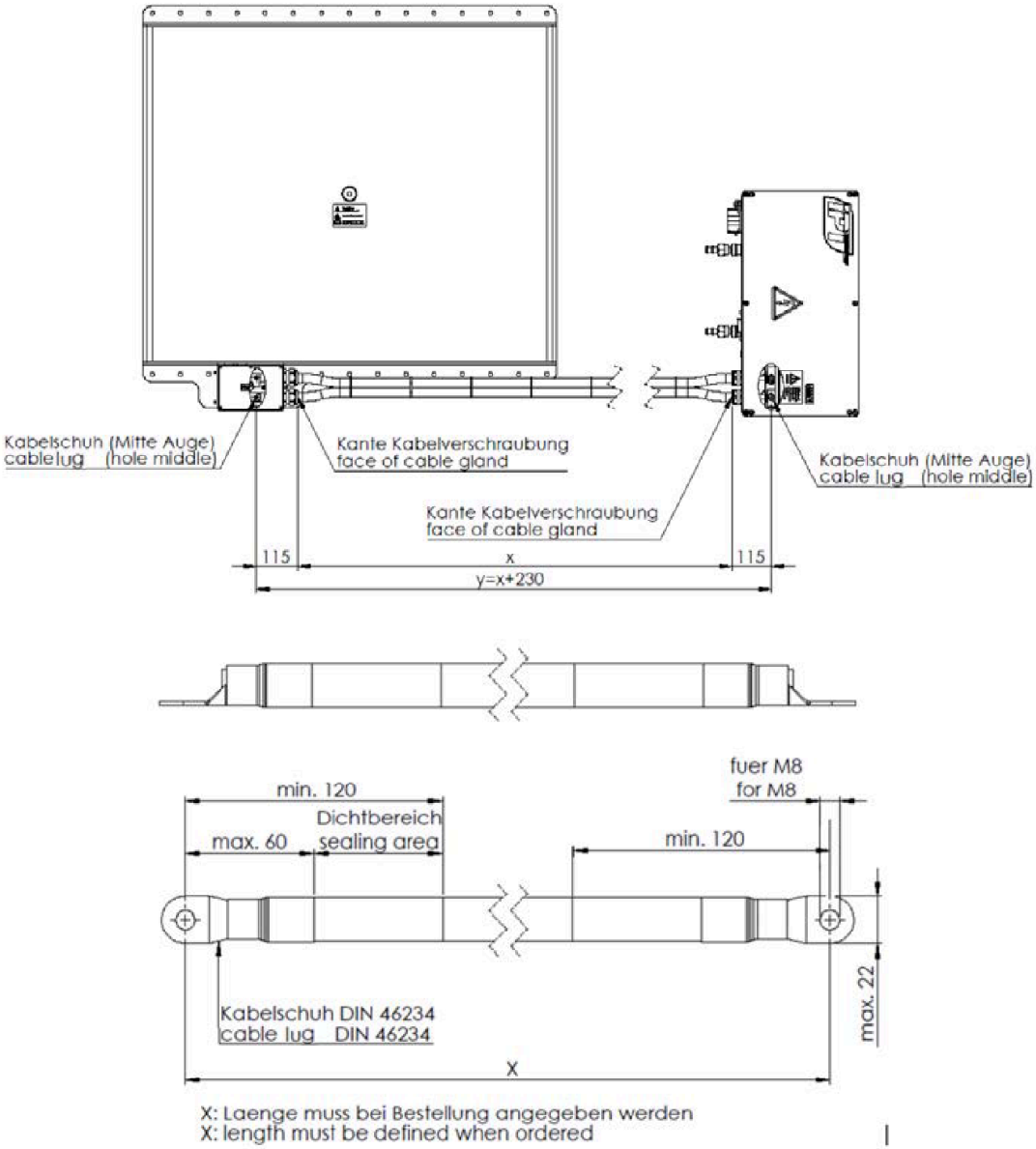



The product specifications and illustrations presenting on this datasheet are indicative and can be changed at any time. It is also possible, if technically feasible, to make adjustments based on your specific wishes.

IPT® Charge Horizontal 20 kHz

ENRX IPT

Track Supply

Bus



TECHNICAL DATA

Electrical data

Output power	100 kW
Supply voltage	400 V (+/- 10 %)
Current consumption (nominal)	~ 170 A
Starting current	< 25 A
Efficiency at nominal load (typical)	> 93 % (Charge Module) > 90 % (System)
Power factor	0.89 – 0.92
Auxiliary voltage	24 V 1 A

Climate

Ambient temperature operation	-20° C – +45° C

Mechanical data

Housing	Stainless steel
Weight	~ 500 kg
Mounting	horizontal
Protection class	IP67

Interfaces

Interfaces	Ethernet, Wireless data transmission, digital inputs/outputs
Wireless data transmission	Radio modem 2.4 GHz
Connection coolant	2 self-sealing couplings

Connections	Cables each 5 m from housing, free end: grid connection, I/O's, Ethernet and to the Charge Pads or terminal box.
Chemical resistance	Resistant against mineral oils, grease, gasoline, cooling liquids, acids + bases up to 15 %. All other chemical influences must be checked.

ORDER NUMBERS / VARIANTS

Item	Description	Technical data
4180005-DIGI2	Track Supply	Bus

DIMENSIONS

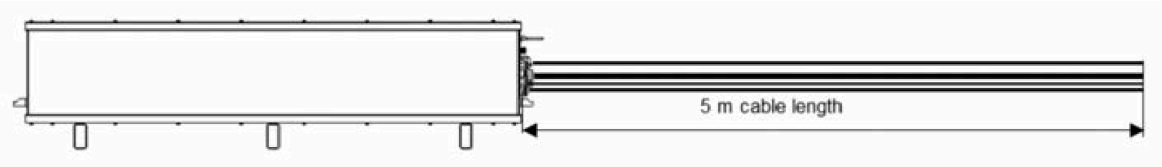

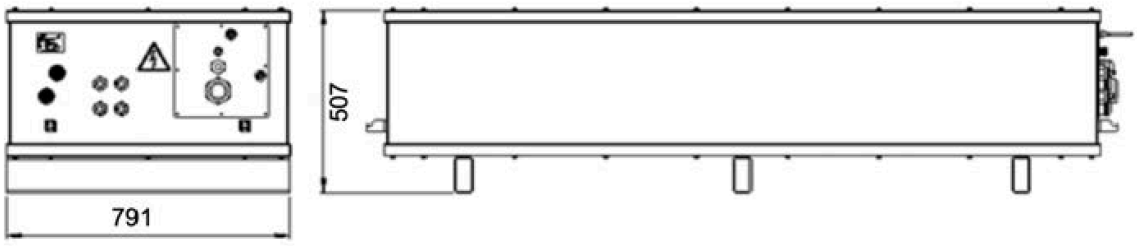

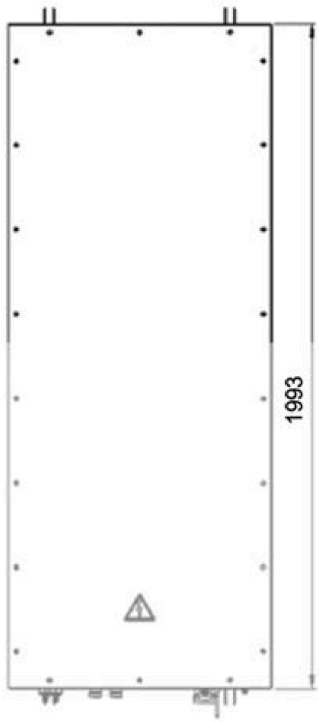

Complementary products

Charge Module 100 kW, 400 V, e.g. 4140010
In-Ground Module, e.g. 4140006/4140002
F-Pickup 50 kW - 600 V - 83 A, e.g. 4150247
Monitoring Unit, (outdoor/indoor), e.g. 4140011/4180140
Cooling System, e.g. 4160049
Remote Battery Charging Interface 600 V, e.g., 4160107
Rectifier 50 kW - 600 V - 83 A, e.g. 4160110
Terminal box e.g. 4180006 (optional)
Litz cable, e.g. 4140028

EXAMPLE CONNECTION TRACK SUPPLY

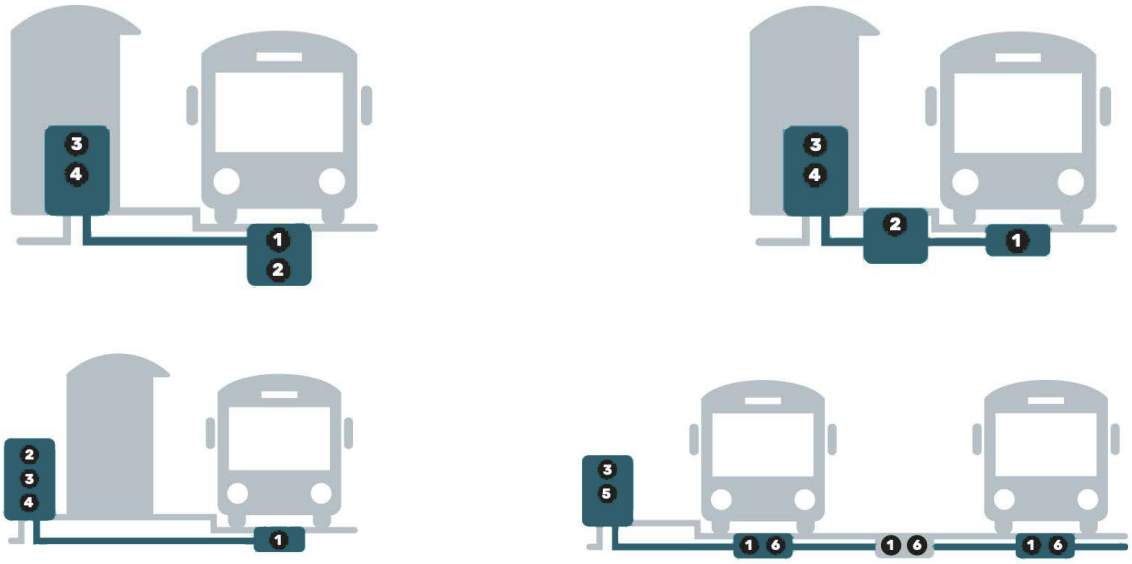

(1) Charge Pads (2) Track Supply (3) Monitoring Unit (4) Cooling System



The product specifications and illustrations presenting on this datasheet are indicative and can be changed at any time. It is also possible, if technically feasible, to make adjustments based on your specific wishes.