Grove RT9150E

Provisional Product Guide

Features

- 135 t (150 USt) capacity
- 12,9 m - 60,0 m (42 ft - 197 ft) six-section, full power boom
- 11 m -18 m (36 ft - 59 ft) offsettable bi-fold swingaway extension
- One 8 m (26 ft) and one 6 m (19.7 ft) extension inserts
- Grove MEGAFORM™ boom with patented TWINLOCK™ system
- Vision cab design
- Dual axis electric proportional controllers

Features

Boom

The six-section TWIN-LOCK™ pinned boom provides 54,8 m (180 ft) working radius with a lifting capacity of 1724 kg (3800 lb) and a 907 kg (2000 lb) capacity with the 17,9 m (59 ft) bi-fold extension at a radius of 67 m (220 ft).

Extension

11,0 m – 18,0 m (36 ft - 59 ft) hydraulically offsettable bi-fold swing away extension. Provides a total tip height of 81,4 m (267 ft).

TWIN-LOCK™ boom pinning system

Using only one telescope cylinder to extend the boom, Grove's TWIN-LOCK™ system maximizes capacities by eliminating weight inside the extended boom.

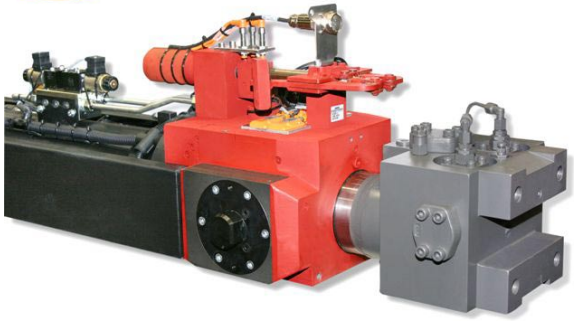

Removable outrigger boxes

Removable front and rear outrigger boxes provides up to 8552 kg (18,854 lb) of weight reduction for transportation.

Contents

Specifications	4
Dimensions	7
Weights	8
Working range	9
Load charts	10
Working range	13
Load charts	15
Load charts - luffing extension	18
Load handling	23

Specifications

Superstructure

Boom

12,9 m – 60,0 m (42.3 ft - 197 ft) six-section, MEGAFORM™ style boom with TWIN-LOCK™ boom pinning system.
Maximum tip height: 63,7 m (209 ft).

Manual offset bi-fold swingaway extension

11,0 m – 18,0 m (36 ft – 59 ft) offsettable bi-fold swingaway extension. Offsets 0°,20°, and 40°. Stows alongside base boom section.
Maximum tip height: 81,4 m (267 ft).

*Hydraulic swingaway extension

11,0 m – 18,0 m (36 ft - 59 ft) hydraulically offsettable bi-fold swingaway extension. Offsets 0°,20°, and 40°. Stows alongside base boom section.
Maximum tip height: 81,4 m (267 ft)

*Hydraulic swingaway extension with heavy duty jib

11,0 m – 18,0 m (36 ft - 59 ft) hydraulically offsettable bi-fold swingaway extension with integrated 3,6 m (11.8 ft) 3-sheave heavy duty jib. Offsets 0°,20°, and 40°. Stows alongside base boom section.

Maximum tip height: 81,4 m (267 ft)

*Lattice extension inserts

One 8 m (26 ft) and one 6 m (20 ft) insert for use with any lattice swingaway extension. Increases extension length to 32 m (105 ft).
Maximum tip height: 95,3 m (312.7 ft)

Boom nose

Eight nylatron sheaves mounted on heavy duty tapered roller bearings with removable pin-type rope guards. Quick reeve type boom nose.

Boom elevation

One double acting hydraulic cylinder with integral holding valve provides elevation from -3° to 78°.

Load moment and anti-two block system

"Graphic Display" load moment and anti-two block system with audio-visual warning and control lever lockout. These systems provide electronic display of boom angle, length, radius, tip height, relative load moment, maximum permissible load, load indication and warning of impending two-block condition. The standard Work Area Definition System allows the operator to pre-select and define safe working areas. If the crane approaches the pre-set limits, audio-visual warnings aid the operator in avoiding job-site obstructions.

Crane control system

Full electronic control of all crane movements, using electronic control levers. Controls are integrated with the LMI by CanBus.

Cab

20° tilt, Full-vision, all-steel fabricated with acoustical lining and tinted safety glass throughout. Deluxe seat incorporates armrest-mounted electric dual-axis controllers. Tilt/telecoping steering wheel with various controls incorporated into the steering column. Other standard features include:, hot water heater, cab circulating air fan, sliding side and rear windows, sliding skylight with electric wiper and sunscreen, electric windshield wash/wipe, fire extinguisher, seat belt, air conditioning, and dual cab mounted work light.

Swing

Two planetary swing drive with axial piston motors provide infinitely variable rotation speeds. Foot applied multi-disc wet brake with Spring applied, hydraulically released stationary swing brake. Two position mechanical house lock, operated from cab.
Maximum speed: 1.5 rpm.

Counterweight

Standard: 17 690 kg (39,000 lb) section. Hydraulically installed and removed.
Optional Heavy-Lift Package: Additional 10 886 kg (24,000 lb) insert for a total of 28 577 kg (63,000 lb). Hydraulically installed and removed from the superstructure.

Denotes optional equipment

Specifications

Superstructure continued

Hydraulic system

Four main pumps ([2] piston and [2] gear) with a combined capacity of 545 LPM (144 GPM).
Maximum operating pressure: 275,7 bar (4000 psi).
Three primary directional control valves with independent function sections. Return line type filter with full flow by-pass protection and service indicator. Replaceable cartridge with micron filtration rating of 10/12/5.
655 L (173 gal) hydraulic reservoir. System pressure test ports.

Hoist Specifications (Siebenhaar 5044) main and auxiliary hoist

Planetary reduction with automatic spring applied multi-disc wet brake. Electronic hoist drum rotation indicators, and hoist drum cable followers. 5th wrap indicator with function cut-out.

Maximum single line pull:
1st layer: 10 707kg (23,606 lb)
3rd layer: 9280 kg (20,459 lb.)
5th layer: 7852 kg (17,311 lb)

Maximum permissible line pull:
7167 kg (15,800 lb) with 35x7 class rope. (5.0:1 design factor)

Maximum single line speed: 135 m/min (443 fpm)

Rope construction:
35x7 WSC, Rotation Resistant (Endurance Dyform 34LR)

Rope diameter: 19 mm (¾ in)

Rope length:
Main hoist: 255 m (837 ft)
Auxiliary hoist: 225 m (738 ft)

Maximum rope stowage:
Main hoist: 300 m (984 ft)
Auxiliary hoist: 300 m (984 ft)

Carrier

Chassis

Box section frame fabricated from high-strength, low alloy steel. Removable outrigger boxes. Front / rear towing and tie down lugs.

Outrigger system

Four hydraulic telescoping single-stage double box beam outriggers with inverted jacks and integral holding valves.
Three position setting, 0%, 50% and fully extended.
Outrigger boxes are removable for ease of transportation.
All steel fabricated, quick release type outrigger floats, 775 mm (30.5 in) square.
Maximum outrigger pad load: 75,300 kg (166,000 lb).

Outrigger controls

Controls and crane level indicator located in cab.

Engine (Tier III)

Cummins QSB 8.3L diesel, six cylinders, 224 kW (300 bhp) (Gross) at 2200 rpm.
Maximum torque: 1356 Nm (1000 ft lb) at 1400 rpm.

Fuel tank capacity

379 L (100 gal)

Transmission

Range-shift 6 x 3 speed [3 speeds x 2 range]
(6 forward and 3 reverse). Front axle disconnect for 4 x 2 travel.

Electrical system

Four (4) 12 V - maintenance free batteries. 24 V starting and lighting. Master Battery disconnect.
CanBus Diagnostic system.

Drive

4 x 4.

*Denotes optional equipment

Specifications

Carrier continued

Steering

Fully independent power steering:
Front: Full hydraulic steering wheel controlled.
Rear: Full hydraulic switch controlled.
Provides infinite variations of 4 main steering modes: front only, rear only, crab and coordinated.
Rear steer centered indicator light.

Outside turning radius: 9,7 m (31.6 ft)
Inside turning radius: 6,9 m (22.6 ft)

Axles

Front: Drive/steer with differential and planetary reduction hubs rigid mounted to frame.
Rear: Drive/steer with differential and planetary reduction hubs pivot mounted to frame.

Oscillation lockouts

Automatic full hydraulic lockouts on rear axle permits 25,4 cm (10 in) oscillation only with boom centered over the front

Brakes

Dry disc, full hydraulic release split circuit operating on all wheels.
Spring-applied, hydraulically released parking brake mounted on front axle.

Tires

Std. 33.25 x 29 - 38 bias ply, Titan SL-100

Lights

Full lighting including turn indicators, head, tail, brake and hazard warning lights.

Maximum speed

24 kph (15 mph) at 2500 rpm without counterweight.
16 kph (10 mph) at 2500 rpm with 17 690 kg (39,000 lb) counterweight.
3 kph (2 mph) at 2500 rpm with 28 577 kg (63,000 lb) counterweight.

Gradeability (theoretical)

70% (at engine stall)
(Based on [76 980 kg (169,708 lb)] GVW) 33.25 x 29 tires, 60,0 m [197 ft]) main boom, plus 17,0 m (56 ft) manual bi-fold swingaway, 17 690 kg (39,000 lb) counterweight, 100 USt hookblock and 9,0 t (10 USt) headache ball.

Miscellaneous standard equipment

Full width steel fenders, full length aluminum decking, dual rear view mirrors, hook-block tie down, electronic back-up alarm, light package, front stowage well, tachometer / hourmeter, rear wheel position indicator, 36,000 BTU hot water cab heater, air conditioning (28,500 BTU), hoist mirrors, engine distress A/V warning system, front/rear/tie down/tow lugs, coolant sight level indicator, 360˚ NYC style mechanical swing lock, boom removal rigging, and counterweight removal rigging.

*Optional equipment

- **Auxiliary Lighting and Convenience Package:** Includes superstructure mounted amber flashing light, single base boom mounted floodlight, and Rubber mat for stowage trough.
- Cab controlled cross axle differential locks, (front and rear)
- Heavy Lift counterweight package
- ECOS event recorder
- Hardwired wind speed indicator
- Rear Pintle Hook
- Boom mounted aircraft warning light
- -28°C (-20°F) cold weather package

Denotes optional equipment

Dimensions

Dimensions

Tire size	A	B	C	D	E	F	G	A	B	C	D	E	F	G
33.25 X 29	17.9 m (705")	18.5 m (730")	15.7 m (618")	14.9 m (586")	14.4 m (567")	11.7 m (459")	10.2 m (400")	13.6 m (536")	14.2 m (557")	11.0 m (432")	10.1 m (398")	9.7 m (380")	6.9 m (272")	5.9 m (233")
	2 Wheel Steer							4 Wheel Steer						

Dimensions for table are represented in meters (inches). Conversions may not be exact.

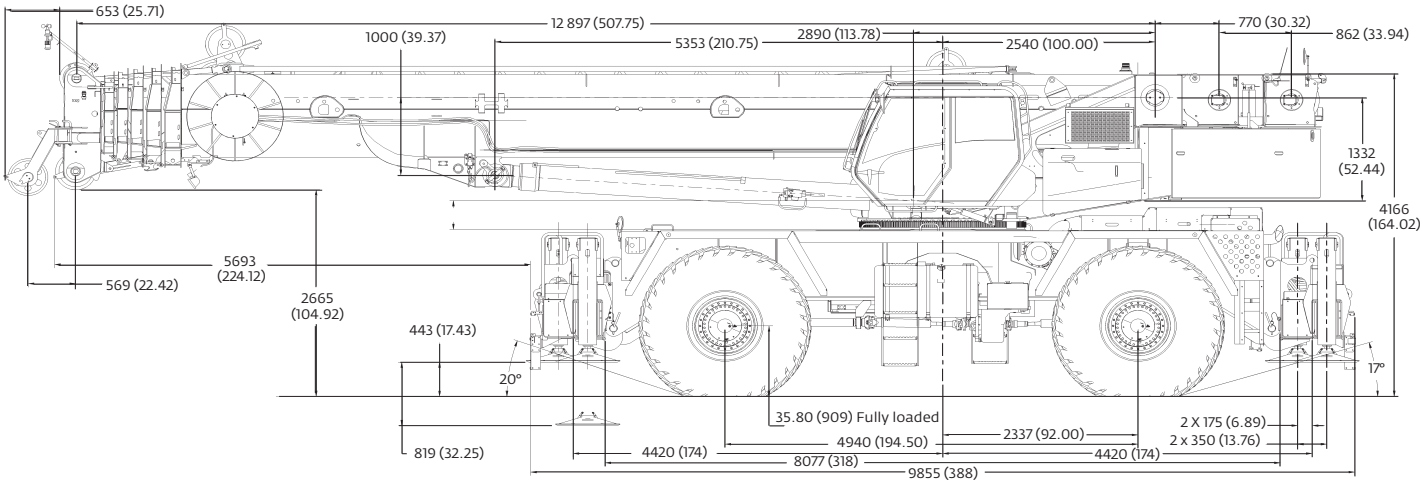

All dimensions are in mm (in)

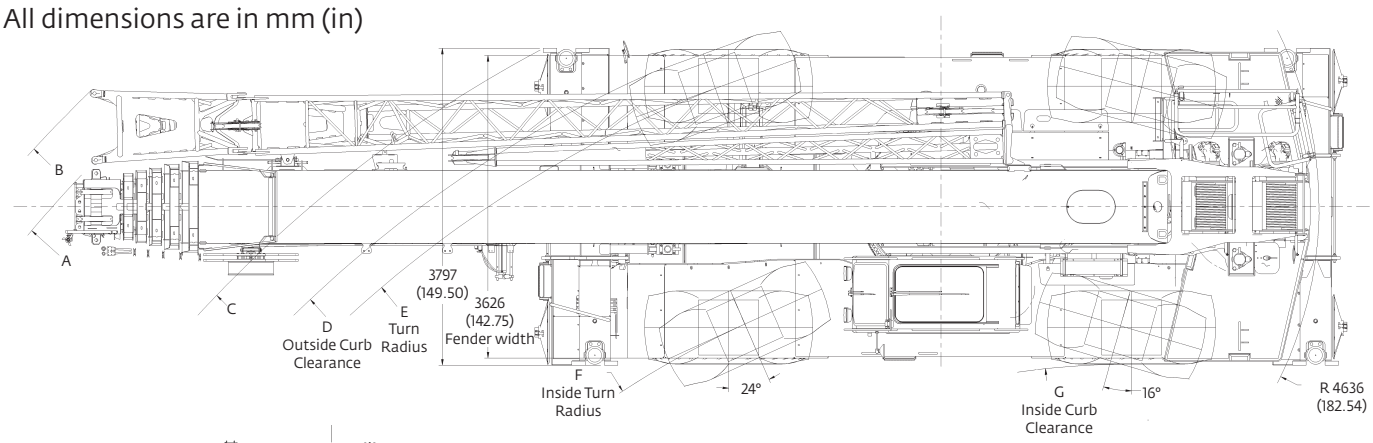

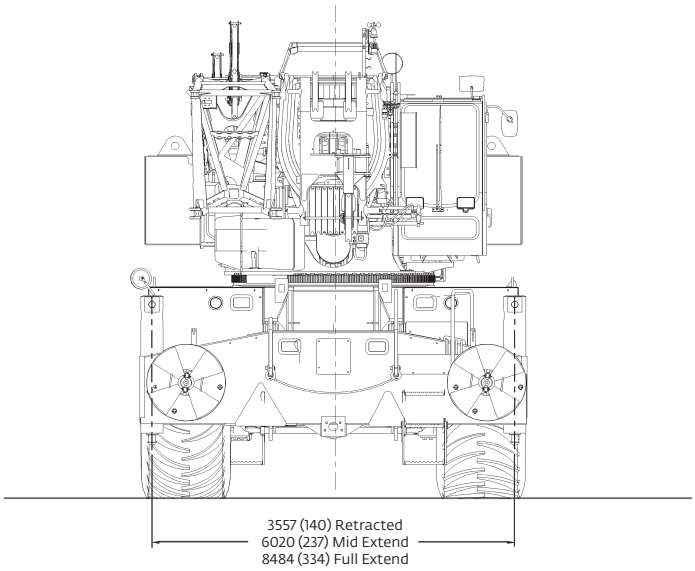

Front View

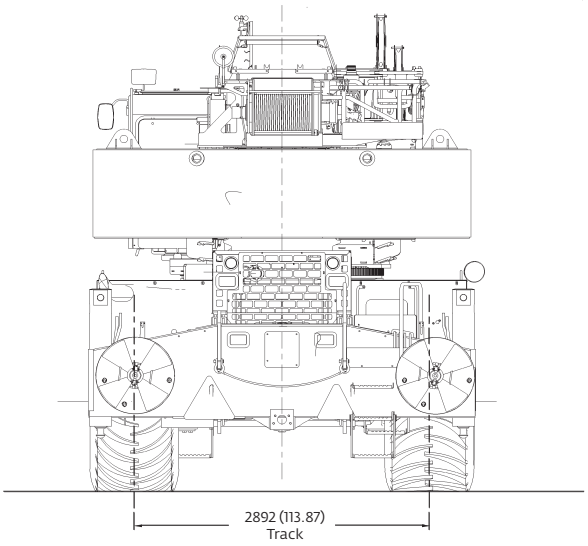

Rear View

Weights

Weights

	Gross kg (lb)	Front kg (lb)	Rear kg (lb)
Basic Machine: Including 60,0 m (197 ft) main boom, main hoist with 255 m (837 ft) of rope, auxiliary hoist with 225 m (738 ft) of wire rope, 28 577 kg (63,000 lb) counterweight, 36 ft - 59 ft manual extension, 9 t (10 USt) headache ball, and 90 t (100 USt) hookblock:	87 751 (193,455)	31 474 (69,386)	56 278 (124,069)
Remove: 36 ft - 59 ft manual extension	-1577 (-3477)	-2327 (-5129)	749 (1652)
Crane weight:	86 174 (189,978)	29 147 (64,257)	57 027 (125,721)
Remove: 100 USt hookblock	-1150 (-2535)	-1094 (-2411)	-56 (-124)
Crane weight:	85 024 (187,443)	28 053 (61,846)	56 971 (125,597)
Remove: 9,0 t (10 USt) headache ball	-330 (-727)	-526 (-1159)	196 (432)
Crane weight:	84 694 (186,716)	27 527 (60,687)	57 167 (126,029)
Remove: 28 577 kg (63,000 lb) counterweight	-28 577 (-63,000)	7665 (16,898)	-36 242 (-79,898)
Crane weight:	56 177 (123,716)	35 192 (77,585)	20 925 (46,131)
Remove: (4) tire/wheel assemblies	-4318 (-9520)	-2159 (-4760)	-2159 (-4760)
Crane weight:	51 799 (114,196)	33 033 (72,825)	18 766 (41,371)
Remove: Front and rear outrigger boxes and beams	-8552 (-18,854)	-4045 (-8918)	-4507 (-9936)
Crane weight:	43 247 (95,342)	28 988 (63,907)	14 259 (31,435)
Remove: Main boom assembly, auxiliary boom nose, and extension brackets	-15 342 (-33,822)	-19 009 (-41,098)	3668 (8086)
Crane weight:	27 095 (61,520)	9979 (21,999)	17 927 (39,521)

PROVISIONAL

THIS CHART IS ONLY A GUIDE AND SHOULD NOT BE USED TO OPERATE THE CRANE.

The individual crane's load chart, operating instructions and other instructional plates must be read and understood prior to operating the crane

Working range

Main boom with bi-fold extension

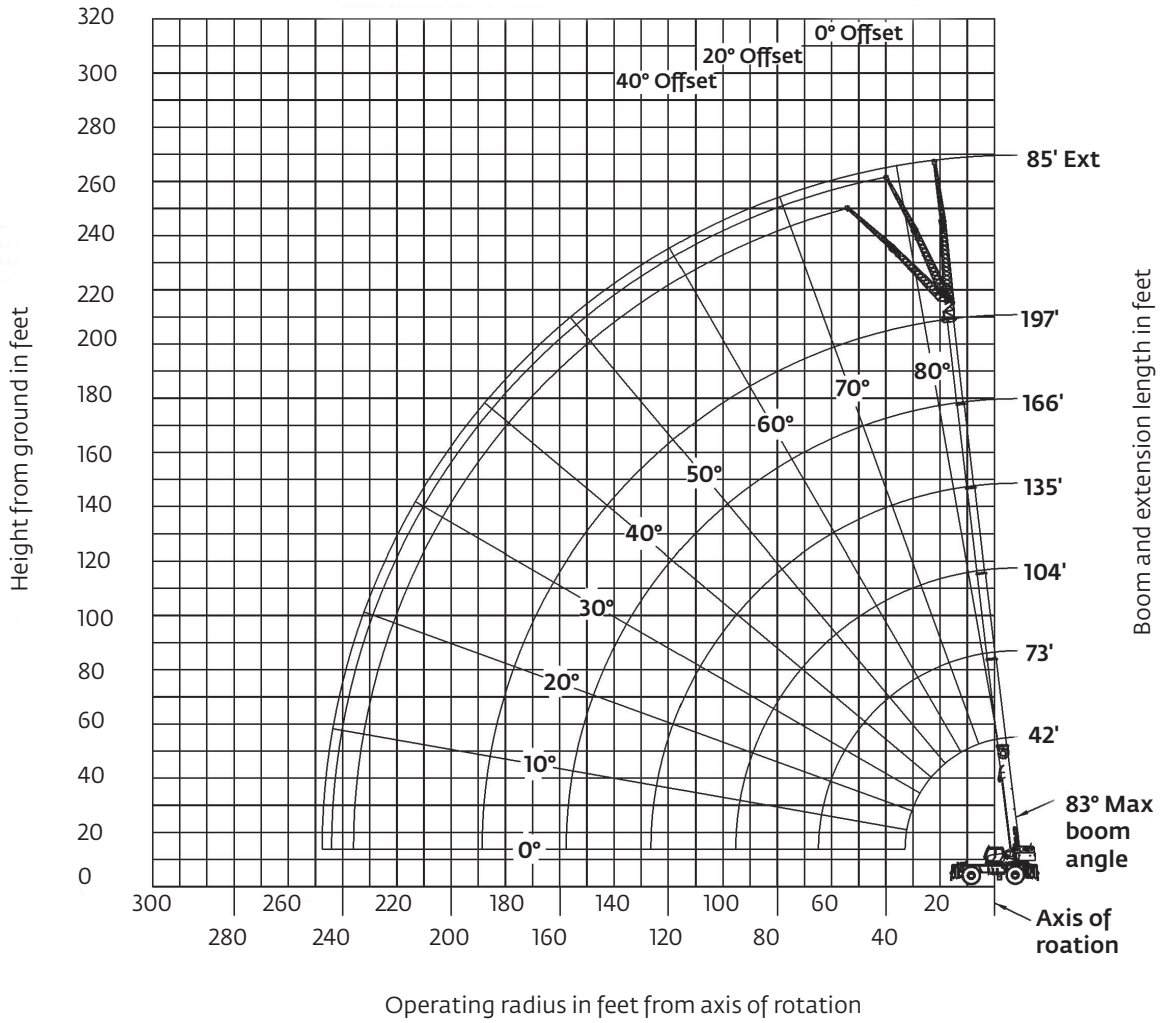

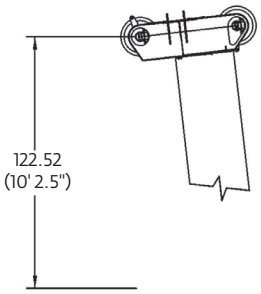

Dimensions are for largest Grove furnished hookblock and overhaul ball, with anti-two block activated.

PROVISIONAL

THIS CHART IS ONLY A GUIDE AND SHOULD NOT BE USED TO OPERATE THE CRANE.

The individual crane's load chart, operating instructions and other instructional plates must be read and understood prior to operating the crane

Load chart

Main boom load chart

42 ft - 197 ft
Fixed lengths

39,000 lb

100%

360˚

Pounds

Feet	42.3'	57.9'	73.4'	88.7'	104.5'	119.6'	134.7'	150.9'	166.4'	181.7'	196.9'
8	*300,000										
9	236,000										
10	217,000	199,000	186,000	143,000							
12	199,000	185,000	173,000	143,000							
15	173,000	165,000	154,000	143,000	110,000						
20	138,500	137,000	132,000	125,000	108,000	84,000	62,000	45,000			
25	108,000	109,500	110,000	109,500	98,000	78,000	62,000	45,000	35,200		
30	87,200	89,250	89,650	89,000	90,000	72,000	61,000	45,000	35,200	25,600	22,000
35		75,400	74,800	75,000	75,750	66,000	56,000	45,000	35,200	25,600	22,000
40		64,050	63,400	65,450	64,450	60,000	51,000	45,000	35,200	25,600	22,000
45		55,100	54,500	56,500	55,550	56,000	47,000	41,400	35,200	25,600	22,000
50			49,000	49,350	48,350	50,200	42,600	38,400	34,800	25,600	22,000
55			43,100	42,700	43,400	43,050	39,200	35,600	32,400	25,600	22,000
60				36,650	38,500	37,050	35,500	32,800	29,800	25,600	22,000
65				32,200	33,650	32,200	31,200	29,800	27,800	25,600	22,000
70				30,000	29,700	28,300	29,400	26,750	25,800	24,400	21,600
75					26,350	25,400	26,250	23,450	23,800	23,000	20,600
80					23,500	24,000	23,400	21,000	21,000	21,400	19,600
85					21,000	22,300	20,950	19,800	18,600	19,250	18,600
90					18,800	20,150	18,850	19,000	16,500	17,150	17,800
95						18,250	17,000	17,550	14,800	15,600	16,150
100						16,550	15,450	15,900	13,600	14,600	14,700
105							13,950	14,550	12,800	13,800	13,250
110							12,600	13,250	12,200	12,900	11,900
115							11,400	12,050	11,600	11,750	10,750
120								10,950	11,000	10,650	9700
125								9970	10,350	9710	8730
130								9200	9480	8820	7840
135								8800	8640	8000	7030
140									7860	7250	6280
145									7150	6550	5590
150									6490	5890	4960
155										5280	4360
160										4710	3800
165											3270
170											2780
175											2320
180											1890

**Requires special equipment*

PROVISIONAL

THIS CHART IS ONLY A GUIDE AND SHOULD NOT BE USED TO OPERATE THE CRANE.

The individual crane's load chart, operating instructions and other instructional plates must be read and understood prior to operating the crane

Manual bi-fold swingaway load chart

42 ft - 197 ft Fixed lengths	36 ft - 59 ft Fixed angles	39,000 lb	100%	360˚

Pounds

Offset	36'						59'					
	0°		20°		40°		0°		20°		40°	
Boom Feet	119.6'	196.9'	119.6'	196.9'	119.6'	196.9'	119.6'	196.9'	119.6'	196.9'	119.6'	196.9'
20	31,400											
25	31,400						14,800					
30	31,400		28,000				14,800					
35	31,400	11,600	27,200				14,600					
40	31,200	11,600	26,400		21,000		14,400	7730				
45	30,400	11,600	25,400		20,400		14,200	7730	12,600			
50	29,600	11,600	24,400	11,600	20,000		14,000	7730	12,400			
55	28,800	11,600	23,400	11,600	19,400	11,600	13,800	7730	12,000			
60	28,000	11,600	22,400	11,600	19,000	11,600	13,600	7730	11,800	8000	10,400	
65	26,600	11,600	21,600	11,600	18,600	11,600	13,400	7730	11,600	8000	10,200	
70	25,400	11,600	21,000	11,600	18,200	11,600	13,000	7730	11,400	8000	10,000	
75	24,200	11,600	20,200	11,600	17,800	11,600	12,800	7730	11,200	8000	9800	
80	23,000	11,600	19,600	11,600	17,600	11,600	12,600	7730	11,000	8000	9600	8000
85	20,850	11,600	19,000	11,600	17,000	11,600	12,400	7730	10,800	8000	9600	8000
90	18,700	11,600	18,600	11,600	16,600	11,600	12,200	7730	10,600	8000	9400	8000
95	16,850	11,600	17,750	11,600	16,000	11,600	11,800	7730	10,400	8000	9400	8000
100	15,300	11,400	15,950	11,400	15,600	11,400	11,600	7730	10,200	8000	9200	8000
105	13,850	11,000	14550.0	10,800	14,900	11,000	11,400	7730	10,000	8000	9200	8000
110	12,500	10,600	13100.0	10,400	13,400	10,600	11,200	7730	9800	8000	9000	8000
115	11,300	10,000	11,850	10,000	12,000	10,000	10,800	730	9600	8000	9000	8000
120	10,250	9300	10,700	9600	10,800	9600	10,600	7730	9600	8000	9000	8000
125	9270	8320	9640	9090		9200	10,400	7730	9400	8000	8800	8000
130	8380	7430	8660	8140		8590	9490	7730	9200	7800	8800	8000
135	7570	6610	7770	7270		7680	8660	7260	9000	7600	8800	7800
140		5850		6470		6830	7890	6500	8550	7200	8800	7400
145		5160		5730		6050	7190	5790	7750	6880	7890	7200
150		4510		5040		5330	6540	5140	7000	6160		6800
155		3910		4400		4650	5940	4530	6300	5500		6140
160		3360		3810		4020	5390	3970	5630	4870		5460
165		2840		3250		3430		3440		4290		4820
170		2350		2730		2880		2950		3740		4220
175		1900		2240		2350		2490		3230		3660
180		1470		1780		1860		2060		2750		3120
185		1070		1350				1650		2290		2620
190								1270		1860		2140
195										1450		1680
200										1070		1250

PROVISIONAL

THIS CHART IS ONLY A GUIDE AND SHOULD NOT BE USED TO OPERATE THE CRANE.

The individual crane's load chart, operating instructions and other instructional plates must be read and understood prior to operating the crane

Load chart

Hydraulic bi-fold swingaway

42 ft - 197 ft
Fixed lengths

36 ft - 59 ft
Fixed and intermediate angles

39,000 lb

100%

360˚

Pounds

Offset	36'						59'					
	0° fixed		0° -20°		20° -40°		0°		0° -20°		20° -40°	
Boom Feet	119.6'	196.9'	119.6'	196.9'	119.6'	196.9'	119.6'	196.9'	119.6'	196.9'	119.6'	196.9'
20	31,400											
25	31,400						14,800					
30	31,400		28,000				14,800					
35	31,400	11,600	27,200				14,600					
40	31,200	11,600	26,400		21,000		14,400	7730				
45	30,400	11,600	25,400		20,400		14,200	7730	12,600			
50	29,600	11,600	24,400	11,600	20,000		14,000	7730	12,400			
55	28,800	11,600	23,400	11,600	19,400	11,600	13,800	7730	12,000			
60	28,000	11,600	22,400	11,600	19,000	11,600	13,600	7730	11,800	7730	10,400	
65	26,600	11,600	21,600	11,600	18,600	11,600	13,400	7730	11,600	7730	10,200	
70	25,400	11,600	21,000	11,600	18,200	11,600	13,000	7730	11,400	7730	10,000	
75	24,200	11,600	20,200	11,600	17,800	11,600	12,800	7730	11,200	7730	9800	
80	23,000	11,600	19,600	11,600	17,600	11,600	12,600	7730	11,000	7730	9600	8000
85	20,850	11,600	19,000	11,600	17,000	11,600	12,400	7730	10,800	7730	9600	8000
90	18,700	11,600	18,600	11,600	16,600	11,600	12,200	7730	10,600	7730	9400	8000
95	16,850	11,600	16,850	11,600	16,000	11,600	11,800	7730	10,400	7730	9400	8000
100	15,300	11,400	15,300	11,400	15,600	11,400	11,600	7730	10,200	7730	9200	8000
105	13,850	11,000	13,850	10,800	14,550	10,800	11,400	7730	10,000	7730	9200	8000
110	12,500	10,600	12,500	10,400	13,100	10,400	11,200	7730	9800	7730	9000	8000
115	11,300	10,000	11,300	10,000	11,850	10,000	10,800	7730	9600	7730	9000	8000
120	10,250	9300	10,250	9300	10,700	9600	10,600	7730	9600	7730	9000	8000
125	9270	8320	9270	8320		9090	10,400	7730	9400	7730	8800	8000
130	8380	7430	8380	7430		8140	9490	7730	9200	7730	8800	7800
135	7570	6610	7570	6610		7270	8660	7260	8660	7260	8800	7600
140		5850		5850		6470	7890	6500	7890	6500	8550	7200
145		5160		5160		5730	7190	5790	7190	5790	7750	6880
150		4510		4510		5040	6540	5140	6540	5140		6160
155		3910		3910		4400	5940	4530	5940	4530		5500
160		3360		3360		3810	5390	3970	5390	3970		4870
165		2840		2840		3250		3440		3440		4290
170		2350		2350		2730		2950		2950		3740
175		1900		1900		2240		2490		2490		3230
180		1470		1470		1780		2060		2060		2750
185		1070		1070				1650		1650		2290
190								1270		1270		1860
195												1450
200												1070

PROVISIONAL

THIS CHART IS ONLY A GUIDE AND SHOULD NOT BE USED TO OPERATE THE CRANE.

The individual crane's load chart, operating instructions and other instructional plates must be read and understood prior to operating the crane

Working range

Main boom with bi-fold extension and one insert

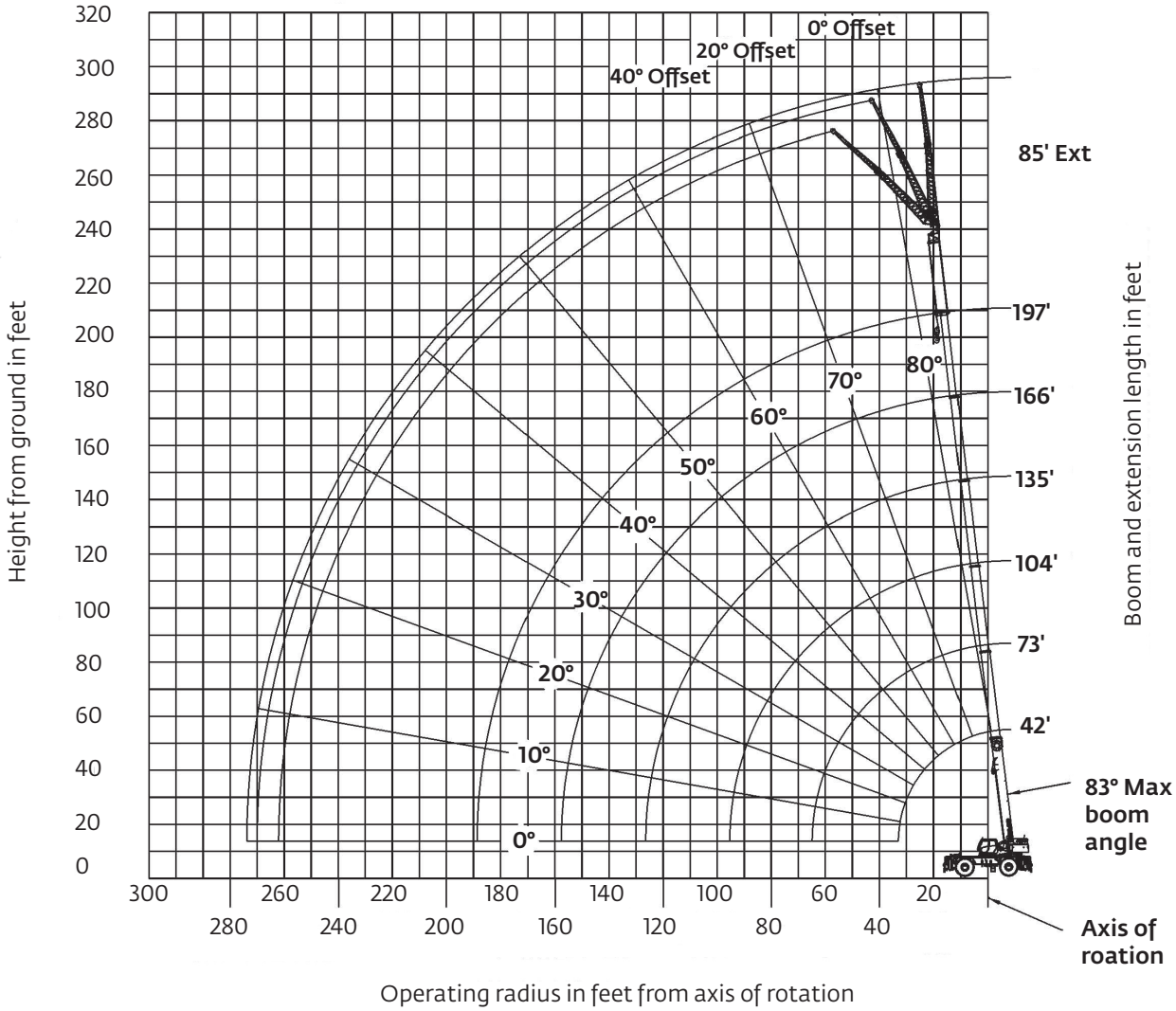

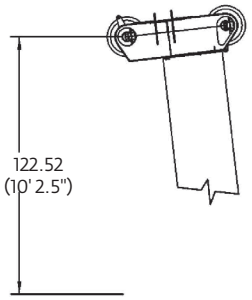

Dimensions are for largest Grove furnished hookblock and overhaul ball, with anti-two block activated.

PROVISIONAL

THIS CHART IS ONLY A GUIDE AND SHOULD NOT BE USED TO OPERATE THE CRANE.

The individual crane's load chart, operating instructions and other instructional plates must be read and understood prior to operating the crane

Working range

Main boom with bi-fold extension and two inserts

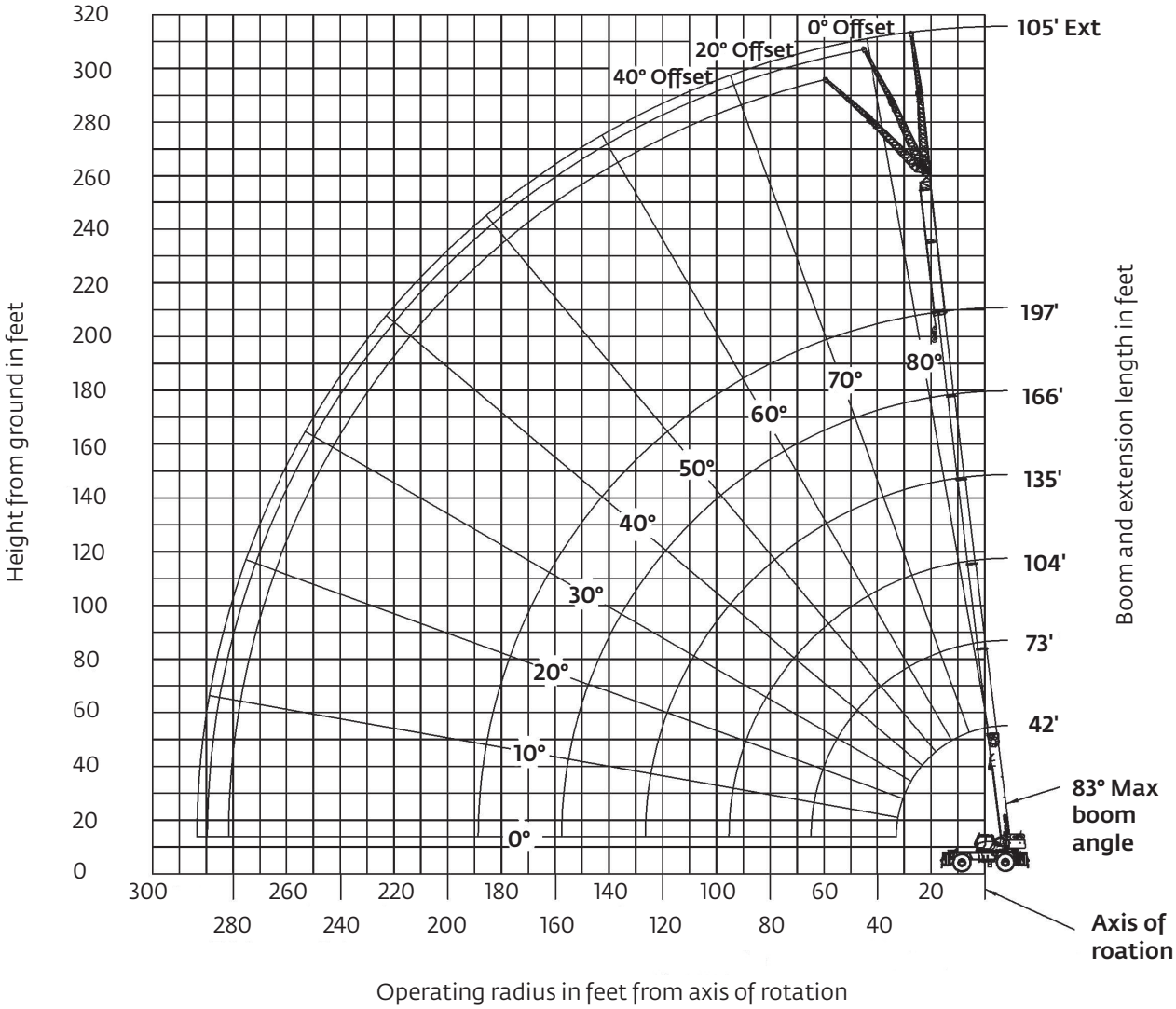

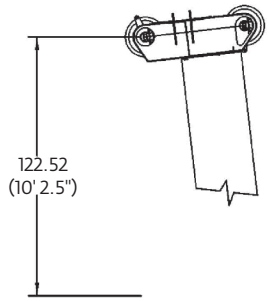

Dimensions are for largest Grove furnished hookblock and overhaul ball, with anti-two block activated.

PROVISIONAL

THIS CHART IS ONLY A GUIDE AND SHOULD NOT BE USED TO OPERATE THE CRANE.

The individual crane's load chart, operating instructions and other instructional plates must be read and understood prior to operating the crane

Load chart

Manual bi-fold swingaway with inserts

42 ft - 197 ft
Fixed lengths

36 ft - 59 ft
Fixed angles

39,000 lb

100%

360°

Pounds

Offset	Insert 26' 85'						Insert 26' + 19.6' 105'					
	0°		20°		40°		0°		20°		40°	
Boom Feet	119.6'	196.9'	119.6'	196.9'	119.6'	196.9'	119.6'	196.9'	119.6'	196.9'	119.6'	196.9'
25												
30	12,000											
35	12,000						9200					
40	12,000						9200					
45	12,000						9200					
50	12,000	5600	11,400				9200	3920				
55	12,000	5600	11,000				9200	3920	9000			
60	11,800	5600	10,600				9200	3920	8600			
65	11,600	5600	10,200				9000	3920	8400			
70	11,200	5600	10,000	5600	9000		8800	3920	8200			
75	10,800	5600	9600	5600	8600		8400	3920	7800	4200	7000	
80	10,400	5600	9200	5600	8400		8200	3920	7600	4200	7000	
85	10,000	5600	9000	5600	8200		8000	3920	7400	4200	6800	
90	9800	5600	8800	5600	8000	5600	7600	3920	7200	4200	6600	4000
95	9400	5600	8400	5600	7800	5600	7400	3920	7000	4200	6400	4000
100	9000	5600	8200	5600	7600	5600	7200	3920	6800	4200	6200	4000
105	8800	5600	8000	5600	7400	5600	7000	3920	6600	4200	6000	4000
110	8400	5600	7600	5600	7200	5600	6800	3920	6200	4200	5800	4000
115	8200	5600	7400	5600	7000	5600	6400	3920	6000	4200	5800	4000
120	8000	5600	7200	5600	6800	5600	6200	3920	5800	4200	5600	4000
125	7600	5600	7000	5600	6800	5600	6000	3920	5600	4200	5400	4000
130	7400	5600	6800	5600	6600	5600	5800	3920	5400	4200	5200	4000
135	7200	5600	6600	5600	6400	5600	5600	3920	5400	4200	5200	4000
140	7000	5600	6600	5600	6400	5600	5400	3920	5200	4200	5000	4000
145	6800	5600	6400	5600	6200	5600	5200	3920	5000	4200	4800	4000
150	6600	5180	6200	5400	6200	5600	5000	3920	4800	4200	4800	4000
155	6270	4570	6000	5200	6000	5600	4800	3920	4800	4200	4600	4000
160	5690	4000	6000	4990	6000	5200	4800	3920	4600	4200	4600	4000
165	5160	3470	5650	4400	5790	5000	4600	3450	4400	4000	4400	4000
170	4660	2970	5080	3850		4430	4400	2950	4400	3800	4200	4000
175	4200	2510	4550	3340		3870	4320	2480	4200	3370	4200	3960
180	3770	2070	4050	2850		3340	3880	2040	4000	2880	4200	3430
185	3370	1660	3560	2400		2840	3460	1630	3860	2420		2930
190	3000	1270	3090	1960		2370	3080	1240	3410	1990		2460
195				1560		1920	2710		2990	1580		2020
200				1170		1490	2370		2590	1200		1590
205						1090	2050		2200			1190
210												
215												
220												

PROVISIONAL

THIS CHART IS ONLY A GUIDE AND SHOULD NOT BE USED TO OPERATE THE CRANE.

The individual crane's load chart, operating instructions and other instructional plates must be read and understood prior to operating the crane

Load chart

Main boom

42 ft - 197 ft
Fixed lengths

63,000 lb

100%

360°

Pounds

Feet	42.3'	57.9'	73.4'	88.7'	104.5'	119.6'	134.7'	150.9'	166.4'	181.7'	196.9'
8	*300,000										
9	236,000										
10	217,000	199,000	186,000	143,000							
12	199,000	185,000	173,000	143,000							
15	173,000	165,000	154,000	143,000	110,000						
20	142,000	137,000	132,000	125,000	108,000	84,000	62,000	45,000			
25	117,000	115,000	114,000	110,000	98,000	78,000	62,000	45,000	35,200		
30	92,000	96,000	96,000	95,000	90,000	72,000	61,000	45,000	35,200	25,600	22,000
35		80,850	81,300	80,650	82,000	66,000	56,000	45,000	35,200	25,600	22,000
40		69,000	69,400	68,750	70,250	60,000	51,000	45,000	35,200	25,600	22,000
45		60,600	60,100	61,750	60,950	56,000	47,000	41,400	35,200	25,600	22,000
50			52,650	54,300	53,550	52,000	42,600	38,400	34,800	25,600	22,000
55			46,300	48,200	47,000	48,000	39,200	35,600	32,400	25,600	22,000
60				43,000	41,800	42,400	35,800	32,800	29,800	25,600	22,000
65				38,400	37,600	38,000	32,600	29,800	27,800	25,600	22,000
70				34,200	35,400	43,200	30,200	27,400	25,800	24,400	21,600
75				27,400	32,200	31,000	28,000	25,400	24,000	23,000	20,600
80					29,000	27,800	26,400	23,800	22,200	21,400	19,600
85					26,400	25,000	25,200	22,000	20,800	20,000	18,600
90					23,800	22,400	24,000	20,800	19,400	18,800	17,800
95						21,000	21,800	19,000	18,200	17,600	17,000
100						20,000	19,800	17,200	17,000	16,400	16,000
105							18,000	15,800	15,600	15,000	14,800
110							16,600	14,800	14,200	13,800	13,600
115							15,200	14,000	13,000	12,800	12,800
120								13,400	11,600	12,000	12,000
125								12,800	10,400	11,600	11,400
130								12,400	9800	11,000	10,800
135								11,400	9400	10,400	10,000
140									8800	10,000	9200
145									8400	9400	8400
150									8000	8600	7600
155										7800	6800
160										7200	6200
165											5600
170											5000
175											4400
180											3800

**Requires special equipment*

PROVISIONAL

THIS CHART IS ONLY A GUIDE AND SHOULD NOT BE USED TO OPERATE THE CRANE.

The individual crane's load chart, operating instructions and other instructional plates must be read and understood prior to operating the crane

Load chart

Manual bi-fold swingaway

42 ft - 197 ft Fixed lengths | 36 ft - 59 ft Fixed angles | 63,000 lb | 100% | 360°

Pounds

Offset	36'						59'					
	0°		20°		40°		0°		20°		40°	
Boom Feet	119.6'	196.9'	119.6'	196.9'	119.6'	196.9'	119.6'	196.9'	119.6'	196.9'	119.6'	196.9'
20	31,400											
25	31,400						14,800					
30	31,400		28,000				14,800					
35	31,400	11,600	27,200				14,600					
40	31,200	11,600	26,400		21,000		14,400	7730				
45	30,400	11,600	25,400		20,400		14,200	7730	12,600			
50	29,600	11,600	24,400	11,600	20,000		14,000	7730	12,400			
55	28,800	11,600	23,400	11,600	19,400	11,600	13,800	7730	12,000			
60	28,000	11,600	22,400	11,600	19,000	11,600	13,600	7730	11,800	8000	10,400	
65	26,600	11,600	21,600	11,600	18,600	11,600	13,400	7730	11,600	8000	10,200	
70	25,400	11,600	21,000	11,600	18,200	11,600	13,000	7730	11,400	8000	10,000	
75	24,200	11,600	20,200	11,600	17,800	11,600	12,800	7730	11,200	8000	9800	
80	23,000	11,600	19,600	11,600	17,600	11,600	12,600	7730	11,000	8000	9600	8000
85	22,000	11,600	19,000	11,600	17,000	11,600	12,400	7730	10,800	8000	9600	8000
90	21,000	11,600	18,600	11,600	16,600	11,600	12,200	7730	10,600	8000	9400	8000
95	20,000	11,600	18,000	11,600	16,000	11,600	11,800	7730	10,400	8000	9400	8000
100	19,200	11,400	17,400	11,400	15,600	11,400	11,600	7730	10,200	8000	9200	8000
105	18,000	11,000	16,800	10,800	15,600	11,000	11,400	7730	10,000	8000	9200	8000
110	16,400	10,600	16,000	10,400	15,400	10,600	11,200	7730	9800	8000	9000	8000
115	15,000	10,000	15,400	10,000	15,200	10,000	10,800	7730	9600	8000	9000	8000
120	13,800	9600	14,200	9600	14,400	9600	10,600	7730	9600	8000	9000	8000
125	12,600	9200	13,000	9200		9200	10,400	7730	9400	8000	8800	8000
130	11,600	8800	11,800	8800		8800	10,200	7730	9200	7800	8800	8000
135	10,600	8400	10,800	8400		8600	10,000	7400	9000	7600	8800	7800
140		8000		8000		8200	9800	7200	9000	7200	8800	7400
145		7600		7800		7800	9400	6800	8800	7000	8800	7200
150		6800		7400		7600	9200	6600	8800	6600		6800
155		6200		6800		7000	8600	6400	8600	6400		6600
160		5600		6000		6200	7800	6000	8000	6200		6400
165		5000		5400		5600		5600		6000		6200
170		4400		4800		5000		5000		5600		5800
175		3800		4200		4200		4600		5400		5600
180		3200		3600		3600		4000		4800		5200
185		2800		3000				3600		4200		4600
190		2400		2600				3000		3800		4000
195		1800		2200				2600		3200		3400
200								2200		2800		3000
205										2400		
210										1800		

PROVISIONAL

THIS CHART IS ONLY A GUIDE AND SHOULD NOT BE USED TO OPERATE THE CRANE.

The individual crane's load chart, operating instructions and other instructional plates must be read and understood prior to operating the crane

Load chart

Hydraulic bi-fold swingaway

42 ft - 197 ft
Fixed lengths

36 ft - 59 ft
Fixed and intermediate angles

63,000 lb

100%

360˚

Pounds

Offset	36'						59'					
	0° fixed		0°-20°		20° -40°		0°		0°-20°		20° -40°	
Boom Feet	119.6'	196.9'	119.6'	196.9'	119.6'	196.9'	119.6'	196.9'	119.6'	196.9'	119.6'	196.9'
20	31,400											
25	31,400						14,800					
30	31,400		28,000				14,800					
35	31,400	11,600	27,200				14,600					
40	31,200	11,600	26,400		21,000		14,400	7730				
45	30,400	11,600	25,400		20,400		14,200	7730	12,600			
50	29,600	11,600	24,400	11,600	20,000		14,000	7730	12,400			
55	28,800	11,600	23,400	11,600	19,400	11,600	13,800	7730	12,000			
60	28,000	11,600	22,400	11,600	19,000	11,600	13,600	7730	11,800	7730	10,400	
65	26,600	11,600	21,600	11,600	18,600	11,600	13,400	7730	11,600	7730	10,200	
70	25,400	11,600	21,000	11,600	18,200	11,600	13,000	7730	11,400	7730	10,000	
75	24,200	11,600	20,200	11,600	17,800	11,600	12,800	7730	11,200	7730	9800	
80	23,000	11,600	19,600	11,600	17,600	11,600	12,600	7730	11,000	7730	9600	8000
85	22,000	11,600	19,000	11,600	17,000	11,600	12,400	7730	10,800	7730	9600	8000
90	21,000	11,600	18,600	11,600	16,600	11,600	12,200	7730	10,600	7730	9400	8000
95	20,000	11,600	18,000	11,600	16,000	11,600	11,800	7730	10,400	7730	9400	8000
100	19,200	11,400	17,400	11,400	15,600	11,400	11,600	7730	10,200	7730	9200	8000
105	18,000	11,000	16,800	10,800	15,600	10,800	11,400	7730	10,000	7730	9200	8000
110	16,400	10,600	16,000	10,400	15,400	10,400	11,200	7730	9800	7730	9000	8000
115	15,000	10,000	15,000	10,000	15,200	10,000	10,800	7730	9600	7730	9000	8000
120	13,800	9600	13,800	9600	14,200	9600	10,600	7730	9600	7730	9000	8000
125	12,600	9200	12,600	9200		9200	10,400	7730	9400	7730	8800	8000
130	11,600	8800	11,600	8800		8800	10,200	7730	9200	7730	8800	7800
135	10,600	8400	10,600	8400		8400	10,000	7400	9000	7400	8800	7600
140		8000		8000		8000	9800	7200	9000	7200	8800	7200
145		7600		7600		7800	9400	6800	8800	6800	8800	7000
150		6800		6800		7400	9200	6600	8800	6600		6600
155		6200		6200		6800	8600	6400	8600	6400		6400
160		5600		5600		6000	7800	6000	7800	6000		6200
165		5000		5000		5400		5600		5600		6000
170		4400		4400		4800		5000		5000		5600
175		3800		3800		4200		4600		4600		5400
180		3200		3200		3600		4000		4000		4800
185		2800		2800				3600		3600		4200
190		2400		2400				3000		3000		3800
195		1800		1800				2600		2600		3200
200								2200		2200		2800

PROVISIONAL

THIS CHART IS ONLY A GUIDE AND SHOULD NOT BE USED TO OPERATE THE CRANE.

The individual crane's load chart, operating instructions and other instructional plates must be read and understood prior to operating the crane

Load chart

Manual bi-fold swingaway with inserts

42 ft - 197 ft Fixed lengths | 36 ft - 59 ft Fixed angles | 63,000 lb | 100% | 360°

Pounds

Offset	Insert 26' 36'						Insert 26' + 19.6' 59'					
	0°		20°		40°		0°		20°		40°	
Boom Feet	119.6'	196.9'	119.6'	196.9'	119.6'	196.9'	119.6'	196.9'	119.6'	196.9'	119.6'	196.9'
25												
30	12,000											
35	12,000						9200					
40	12,000						9200					
45	12,000						9200					
50	12,000	5600	11,400				9200	3920				
55	12,000	5600	11,000				9200	3920	9000			
60	11,800	5600	10,600				9200	3920	8600			
65	11,600	5600	10,200				9000	3920	8400			
70	11,200	5600	10,000	5600	9000		8800	3920	8200			
75	10,800	5600	9600	5600	8600		8400	3920	7800	4200	7000	
80	10,400	5600	9200	5600	8400		8200	3920	7600	4200	7000	
85	10,000	5600	9000	5600	8200		8000	3920	7400	4200	6800	
90	9800	5600	8800	5600	8000	5600	7600	3920	7200	4200	6600	4000
95	9400	5600	8400	5600	7800	5600	7400	3920	7000	4200	6400	4000
100	9000	5600	8200	5600	7600	5600	7200	3920	6800	4200	6200	4000
105	8800	5600	8000	5600	7400	5600	7000	3920	6600	4200	6000	4000
110	8400	5600	7600	5600	7200	5600	6800	3920	6200	4200	5800	4000
115	8200	5600	7400	5600	7000	5600	6400	3920	6000	4200	5800	4000
120	8000	5600	7200	5600	6800	5600	6200	3920	5800	4200	5600	4000
125	7600	5600	7000	5600	6800	5600	6000	3920	5600	4200	5400	4000
130	7400	5600	6800	5600	6600	5600	5800	3920	5400	4200	5200	4000
135	7200	5600	6600	5600	6400	5600	5600	3920	5400	4200	5200	4000
140	7000	5600	6600	5600	6400	5600	5400	3920	5200	4200	5000	4000
145	6800	5600	6400	5600	6200	5600	5200	3920	5000	4200	4800	4000
150	6600	5400	6200	5400	6200	5600	5000	3920	4800	4200	4800	4000
155	6400	5000	6000	5200	6000	5600	4800	3920	4800	4200	4600	4000
160	6200	4800	6000	5000	6000	5200	4800	3920	4600	4200	4600	4000
165	6000	4600	5800	4800	5800	5000	4600	3800	4400	4000	4400	4000
170	5800	4400	5800	4600		4800	4400	3600	4400	3800	4200	4000
175	5800	4200	5600	4400		4600	4400	3400	4200	3600	4200	4000
180	5600	3800	5600	4200		4400	4200	3200	4000	3400	4200	3800
185	5400	3400	5600	4000		4200	4000	3000	4000	3200		3600
190	4800	3000	5000	3600		4000	4000	2800	3800	3200		3400
195		2600		3200		3600	3800	2400	3800	3000		3200
200		2200		2800		3200	3800	2000	3800	2600		3000
205				2400		2800	3600		3600	2200		2600
210				2000		2200				1800		2200
215												
220												

PROVISIONAL

THIS CHART IS ONLY A GUIDE AND SHOULD NOT BE USED TO OPERATE THE CRANE.

The individual crane's load chart, operating instructions and other instructional plates must be read and understood prior to operating the crane

Load chart

Pick and carry

Rated lifting capacities in pounds
Main boom at fixed boom lengths
With 39,000 lb counterweight
On rubber Pick & Carry capacities (up to 2.5 mph)
Boom centered over front

Tele. Sect.	SLI code #1205					
	Main boom length in feet					
	42.3	57.5	72.6	72.8	87.9	88.3
Sect I	0%	0%	0%	0%	0%	0%
Sect II	0%	0%	0%	0%	0%	0%
Sect III	0%	0%	0%	0%	0%	50%
Sect IV	0%	0%	0%	50%	50%	50%
Sect V	0%	50%	100%	50%	100%	50%
Radius in feet	**Lifting capacties in pounds**					
15	57,500					
20	42,400	34,000				
25	31,500	34,000				
30	23,450	28,550	30,700	30,500		
35		23,000	25,250	25,100	26,000	21,700
40		18,650	20,950	20,750	22,400	18,400
45		15,050	17,300	17,150	19,150	15,700
50			14,350	14,150	16,400	13,450
55			11,800	11,600	14,000	11,500
60			9690	9480	11,950	9820
65					10,200	8370
70					8690	7100
75					7340	5990
80						5010

Boom angle	Lifting capacties in pounds					
0°	18,350	12,600	8080	7800	6240	5010

80020677

Notes for fixed and intermediate lengths when lifting on rubber:
1. Capacities do not exceed 75% of tipping loads as determined by test in accordance with SAE J765.
2. Capacities are applicable to machines equipped with General 33.25x29 (38 ply) tires at 85 psi cold inflation pressure.
3. Capacities are applicable only with machine on firm level surface.
5. On rubber lifting with boom extension is not permitted.
6. All lifting depends on proper tire inflation, capacity and condition. Capacities must be reduced for lower tire inflation pressures. Damaged tires are hazardous to safe operation of crane.
7. For pick and carry operation, boom must be centered over front of machine, mechanical swing lock engaged and load restrained from swinging.

PROVISIONAL
THIS CHART IS ONLY A GUIDE AND SHOULD NOT BE USED TO OPERATE THE CRANE.
The individual crane's load chart, operating instructions and other instructional plates must be read and understood prior to operating the crane

Counterweight installation rigging chart

Rated lifting capacities in pounds for installing counterweight
Main boom with no counterweight
On outriggers fully extended 360°

Fixed boom lengths

Tele. Sect.	SLI code #1100		
	Main boom length in feet		
	42.3	57.5	72.6
Sect I	0%	0%	0%
Sect II	0%	0%	0%
Sect III	0%	0%	0%
Sect IV	0%	0%	50%
Sect V	0%	50%	0%
Radius in feet	**Lifting capacities in pounds**		
10	100,000	100,000	100,000
12	100,000	100,000	100,000
15	100,000	97,000	100,000
20	100,000	83,000	100,000
25	91,150	73,000	94,550
30	70,550	66,000	74,650
35		55,300	53,850
40		42,350	41,050

80020692

Intermediate boom lengths

Tele. Sect.	SLI code #1100	
	Main boom length in feet	
	42.3-57.5	42.3-57.6
Sect I	0%	0%
Sect II	0%	0%
Sect III	0%	0%
Sect IV	0%	0-50%
Sect V	0-50%	0%
Radius in feet	**Lifting capacities in pounds**	
10	88,000	85,000
12	88,000	85,000
15	88,000	85,000
20	83,000	85,000
25	73,000	85,000
30	66,000	70,550

80020694

PROVISIONAL
THIS CHART IS ONLY A GUIDE AND SHOULD NOT BE USED TO OPERATE THE CRANE.
The individual crane's load chart, operating instructions and other instructional plates must be read and understood prior to operating the crane

Load chart

Outrigger boxes rigging chart

Rated lifting capacities in pounds for installing outrigger boxes
Main boom with no counterweight and with the outrigger boxes removed
Stationary on rubber 360°

Fixed boom lengths

Tele. Sect.	SLI code #1104		
	Main boom length in feet		
	42.3	57.5	72.6
Sect I	0%	0%	0%
Sect II	0%	0%	0%
Sect III	0%	0%	0%
Sect IV	0%	0%	50%
Sect V	0%	50%	0%
Radius in feet	**Lifting capacties in pounds**		
10	25,000	25,000	25,000
12	25,000	25,000	25,000
15	25,000	25,000	25,000
20	15,650	19,400	18,350
25	8000	11,750	10,750

80020700

Intermediate boom lengths

Tele. Sect.	SLI code #1100	
	Main boom length in feet	
	42.3-57.5	42.3-57.6
Sect I	0%	0%
Sect II	0%	0%
Sect III	0%	0%
Sect IV	0%	0-50%
Sect V	0-50%	0%
Radius in feet	**Lifting capacties in pounds**	
10	25,000	25,000
12	25,000	25,000
15	25,000	25,000
20	15,650	15,650
25	800	8000

80020699

Notes for fixed and intermediate lengths when lifting on rubber:

1. Capacities are applicable to machines equipped with General 33.25x29 (38 ply) tires at 85 psi cold inflation pressure. Capacities do not exceed 75% of tipping loads as determined by test in accordance with SAE J765.
2. With no load, do not exceed a 30 ft load radius over sides of machine since a loss of stability could occur causing a tipping condition. To lower boom into a horizontal position, swing the boom directly over the front of the machine and either fully retract the boom or switch the SLI system into a rigging table.
3. Once one outrigger box is installed, do not swing over that end of the machine while installing the other outrigger box.
4. Capacities are applicable only with machine on firm level surface.
5. On rubber lifting with boom extension is not permitted.
6. Axle lockouts must be functioning when lifting on rubber over the sides.
7. All lifting depends on proper tire inflation, capacity and condition. Capacities must be reduced for lower tire inflation pressures. Damaged tires are hazardous to safe operation of crane.

PROVISIONAL
THIS CHART IS ONLY A GUIDE AND SHOULD NOT BE USED TO OPERATE THE CRANE.
The individual crane's load chart, operating instructions and other instructional plates must be read and understood prior to operating the crane

Weight reductions for load handling devices

Auxiliary boom nose	133 lb
Hookblocks and headache balls	
100 USt, 7-sheave	2535+ lb
130 USt, 8-sheave	2530+ lb
10 USt overhaul ball	727+ lb
+Refer to rating plate for actual weight.	

When lifting over swingaway and/or jib combinations, deduct total weight of all load handling devices reeved over main boom nose directly from swingaway or jib capacity.

36 ft - 59 ft luffing folding boom extension (luffing or manual)		
	Without hookblock or overhaul ball	**With 727 lb overhaul ball**
*36 ft extension (erected)	5170 lb	7830 lb
*59 ft extension (erected)	8390 lb	12,610 lb
12 ft luffing boom extension		
*12 ft extension (erected)	2620 lb	3690 lb

*Reduction of main boom capacities

NOTE: All load handling devices and boom attachments are considered part of the load and suitable allowances MUST BE MADE for their combined weights. Weights are for Grove furnished equipment.

Working area diagram

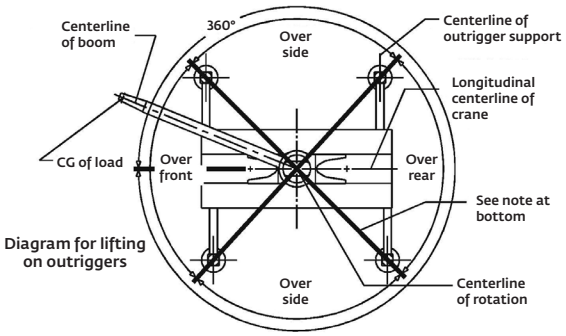

Diagram for lifting on outriggers

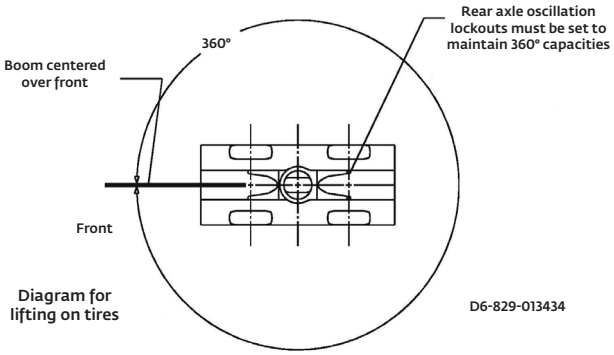

Diagram for lifting on tires

PROVISIONAL

THIS CHART IS ONLY A GUIDE AND SHOULD NOT BE USED TO OPERATE THE CRANE.

The individual crane's load chart, operating instructions and other instructional plates must be read and understood prior to operating the crane

Symbols glossary

Axles

Boom

Boom elevation

Boom extension

Boom length

Boom nose

Brakes

Cab

Counterweight

Drive

Electrical system

Engine

Extension

Frame

Fuel tank capacity

Outriggers

Grade

Heavy duty jib

Hoist

Hookblock

Hydraulic system

Lights

Oil

Outrigger controls

Gear

Radius

Rotation

Speed

Steering

Suspension

Swing

Tires

Transmission

Notes

Notes

Notes

Regional headquarters

Manitowoc - Americas
Manitowoc, Wisconsin, USA
Tel: +1 920 684 6621
Fax: +1 920 683 6277

Shady Grove, Pennsylvania, USA
Tel: +1 717 597 8121
Fax: +1 717 597 4062

Manitowoc - Europe, Middle East, Africa
Ecully, France
Tel: +33 (0)4 72 18 20 20
Fax: +33 (0)4 72 18 20 00

Manitowoc - Asia Pacific
Shanghai, China
Tel: +86 21 6457 0066
Fax: +86 21 6457 4955

Regional offices

Americas
Brazil
Alphaville
Mexico
Monterrey
Chile
Santiago

Europe, Middle East, Africa
Czech Republic
Netvorice
France
Baudemont
Cergy
Decines
Germany
Langenfeld
Hungary
Budapest
Italy
Lainate
Netherlands
Breda
Poland
Warsaw
Portugal
Baltar
Russia
Moscow
U.A.E.
Dubai
U.K.
Buckingham

Asia - Pacific
Australia
Brisbane
Melbourne
Sydney
China
Beijing
Chengdu
Guangzhou
India
Delhi
Hyderabad
Pune
Korea
Seoul
Philippines
Makati City
Singapore

Factories

Brazil
Alphaville
China
TaiAn
Zhangjiagang
France
Charlieu
La Clayette
Moulins
Germany
Wilhelmshaven
India
Pune
Italy
Niella Tanaro
Portugal
Baltar
Fânzeres
Slovakia
Saris
USA
Manitowoc
Port Washington
Shady Grove

This document is non-contractual. Constant improvement and engineering progress make it necessary that we reserve the right to make specification, equipment, and price changes without notice. Illustrations shown may include optional equipment and accessories and may not include all standard equipment.

©2010 Manitowoc
Printed in USA
Form No. RT9150E PPG
Part No. 10-006-.5M-0810