element®
DESIGNS

Glass Markerboard Technical Manual

v3.26

Glass Thickness Options

4mm (5/32")

6mm (1/4")

Edge Finish Options

Surface Finish Options

Minimum and Maximum Sizes

Thickness	Minimum*	Maximum
4mm (5/32")	6" x 12"	48" x 96"
6mm (1/4")	6" x 12"	60" x 120"

*Contact Element Designs for availability of other sizes.

Glass Dimensional Tolerances

Thickness	Edgework	Metric	Decimal, Standard	Fraction, Standard
4mm (5/32")	polished	+0, -1.6mm	+0, -0.063"	+0, - 1/16"
6mm (1/4")	polished	+0, -3.2mm	+0, -0.125"	+0, - 1/8"

Note to Specifier:

Glass used for backpainting is low-iron clear, which allows for minimal color distortion of the paint through the glass.

All paint is water based and no VOCs are released during production.

ANY liquid adhesive or mastic should be avoided, because it will telegraph through the paint.

All Element Designs glass is tempered. Tempered glass will not have an etched tempered logo unless otherwise specified at time of order.

All Magnetic Markerboards require Rare Earth (Neodymium) Magnets.

Standard Colors

All backpainted glass includes a light grey backer on the color-coated surface for additional durability and 100% opacity. Alternative colors for backer are available upon request.

Non-Standard Colors & Custom Color Match

Exact color matching is available, but samples are required for approval. Additional custom color match fee applies.

Note: Glass thicknesses can optically distort the backpainted glass color and appearance. Please make sure any samples requested are in the same thickness as your application.

ELEVATE

Frameless Magnetic or Non-Magnetic Glass Markerboard

Markerboards come with cleat pre-installed and bonded to the back of the board and include a z-clip (french cleat) for wall mounting.

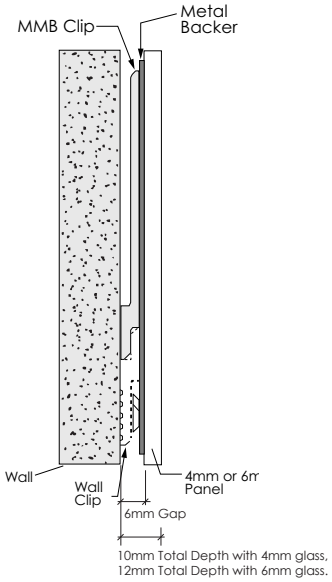

Key Features & Specifications

- Material: Low-Iron Clear, Backpainted Glass
- Surface Type: Magnetic or Non-Magnetic
- Finish Options: Gloss or Writable Matte Glass
- Wall-mounted installation
- Scratch-resistant, easy-to-clean
- Eco-Friendly: Sustainable materials, low-VOC finishes
- Max Glass Sheet Size: 48" x 120"
- Number of cleats is calculated based on linear footage and weight of glass
- Length of cleats are always slightly less than the width of the board.

We recommend liquid glass markers for writing on either finish markerboard. Glass will work with both wet and dry erase marker options. Rare Earth (Neodymium) magnets are required on any magnetic glass markerboards.

ALIGN

Flush Frame Magnetic or Non-Magnetic Glass Markerboard

Align markerboards come with a metal frame that also serves as the pre-installed cleat as it is bonded to the back of the glass and a z-clip (french cleat) is included for wall mounting.

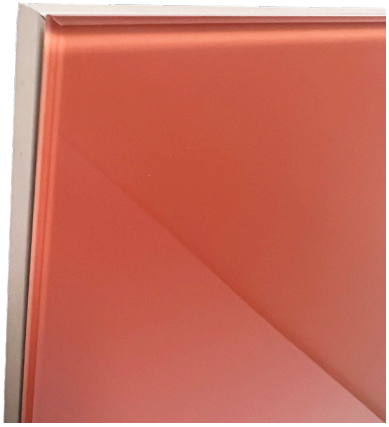

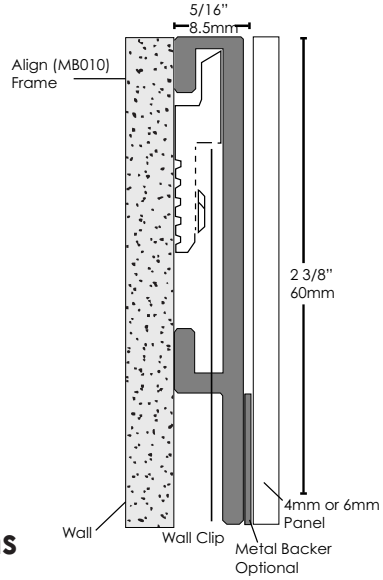

Key Features & Specifications

- Material: Aluminum MB010 Frame & Low-Iron Clear, Backpainted Glass
- Surface Type: Magnetic or Non-Magnetic
- Finish Options: Gloss or Writable Matte Glass
- Wall-mounted installation
- Scratch-resistant, easy-to-clean
- Eco-Friendly: Sustainable materials, low-VOC finishes
- Max Glass Sheet Size: 48" x 120"
- Number of cleats is calculated based on linear footage and weight of glass. You may see additional cleats mounted on the back of the board itself.

We recommend liquid glass markers for writing on either finish markerboard. Glass will work with both wet and dry erase marker options. Rare Earth (Neodymium) magnets are required on any magnetic glass markerboards.

Aluminum Frame Finish Options

natural aluminum (N)

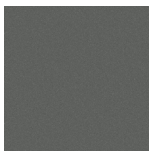
graphite (GR)

arctic silver (AS)

luxe bronze (LB)

onyx - black matte (X)

gold (GLD)

modern brass (MB)

bronze matte (BZM)

black (B)

EDGE

Thin Framed Magnetic or Non-Magnetic Glass Markerboard

Edge markerboards come with a metal frame that also serves as the pre-installed cleat as it is bonded to the back of the glass and a z-clip (french cleat) is included for wall mounting.

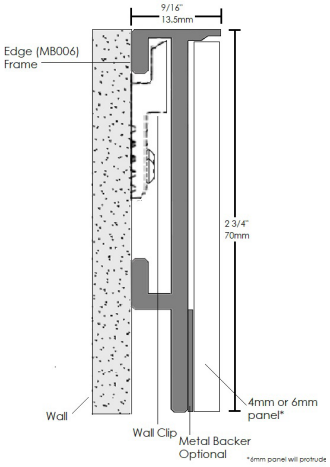

Key Features & Specifications

- Material: Aluminum MB006 Frame & Low-Iron Clear, Backpainted Glass
- Surface Type: Magnetic or Non-Magnetic
- Finish Options: Gloss or Writable Matte Glass
- Wall-mounted installation
- Scratch-resistant, easy-to-clean
- Eco-Friendly: Sustainable materials, low-VOC finishes
- Max Glass Sheet Size: 48" x 120"
- Number of cleats is calculated based on linear footage and weight of glass. You may see additional cleats mounted on the back of the board itself.

We recommend liquid glass markers for writing on either finish markerboard. Glass will work with both wet and dry erase marker options. Rare Earth (Neodymium) magnets are required on any magnetic glass markerboards.

Aluminum Frame Finish Options

natural aluminum (N)

graphite (GR)

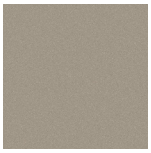
arctic silver (AS)

luxe bronze (LB)

onyx - black matte (X)

gold (GLD)

modern brass (MB)

bronze matte (BZM)

black (B)

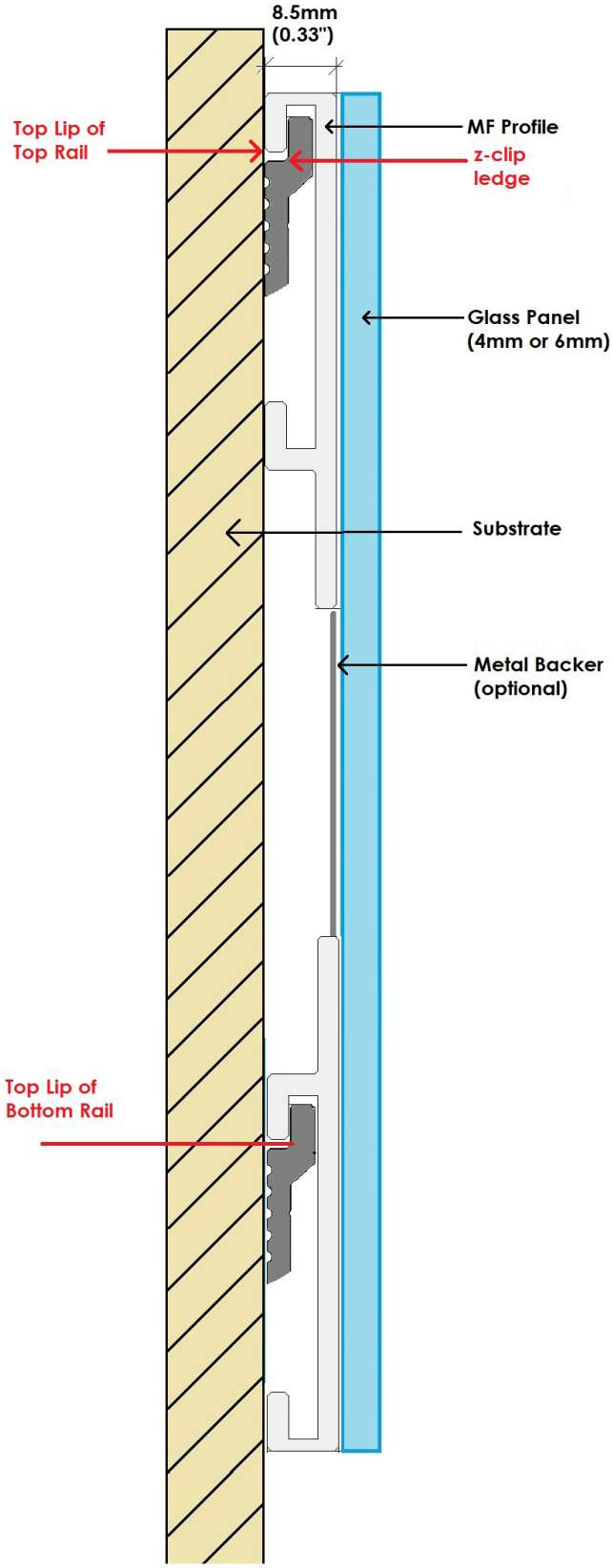

1) Measure from Top Lip of Top Rail to Top Lip of Bottom Rail. Mark locations on substrate.

2) Locate studs or structural elements on the desired mounting surface using a stud finder. If wall studs are not found, screw anchors are required to insure a solid connection of the z-clip to the mounting surface.

3) Attach the z-clips to the wall, aligning z-clip ledge with locations of Top Rail Lip and Bottom Rail Lip location markings.

4) Hang the glass markerboards with the inside channel of the MF010 profile rails by lifting and engaging on the z-clip.

The markerboard will come with two or three aluminum lineal mounting brackets (MF Tape) permanently adhered to the back of the panel. The location of the mounting brackets will need to correspond to the installation of the z-clip which will mount to the wall. Correct installation of the system will result in a floating markerboard with minimal 1/4" (6mm) projection off the mounting surface.

Markerboard Construction (Backside View)

Two mounting brackets (MMBs < ~15 SF)

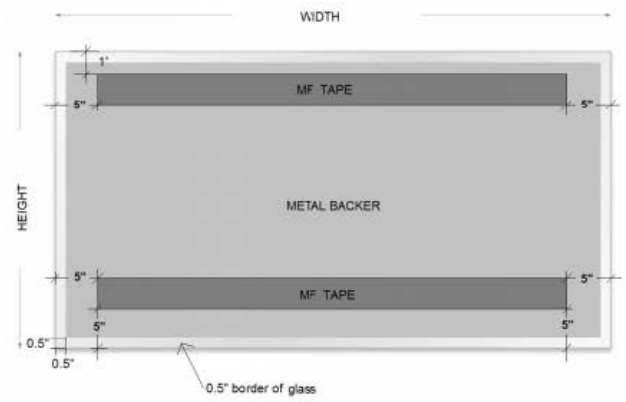

Three mounting brackets (MMBs > ~15 SF)

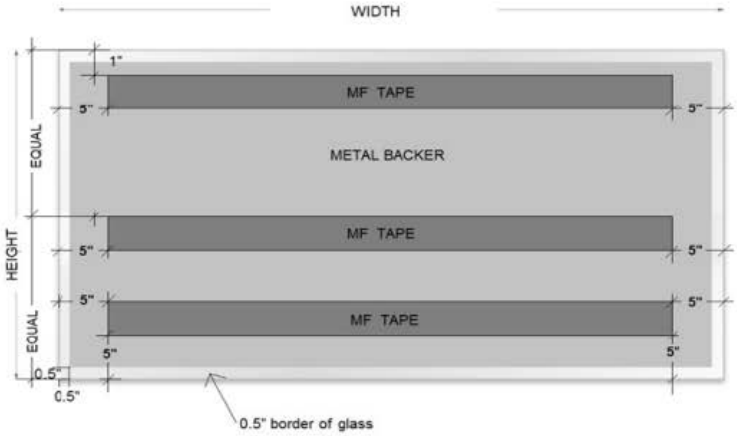

1) Measure to the bottom edge of each MF Tape mounting bracket locations and mark the wall for the z-clip installation. As a guide, the top MF Tape hanger of the mounting bracket is located approximately at 4" from the top edge of the glass markerboard. The bottom MF Tape hanger will be located at approximately 5.375" from the bottom edge of the glass markerboard. On panels that > 15 sf, the center MF Tape hanger of the mounting bracket will be located approximately 3" below the markerboard's centerline. Due to technical and custom construction requirements, it is recommended that these dimensions be field verified prior to installation of the markerboard.

2) Locate studs or structural elements on the desired mounting surface using a stud finder. If wall studs are not found, screw anchors are required to insure a solid connection of the z-clip to the mounting surface.

3) Attach the z-clips to the wall at the corresponding locations of the bottom edge of each MF Tape mounting bracket, parallel to the floor or work surface.

4) Hang the glass markerboard's MF Tape mounting bracket by lifting and engaging on the z-clip as shown below.

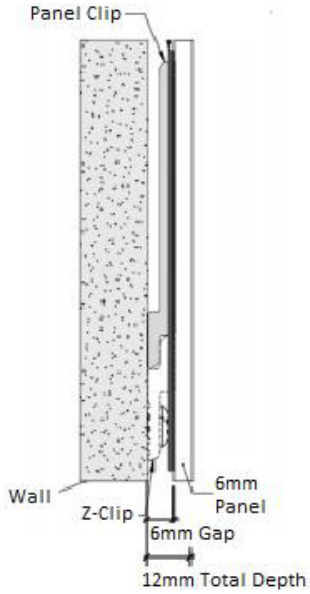

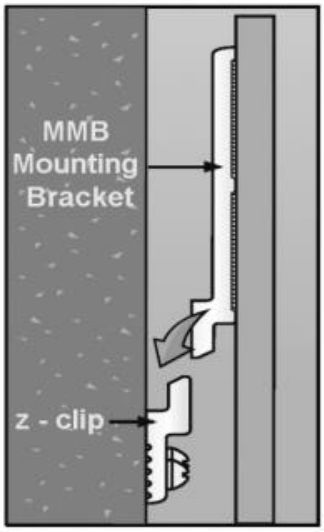

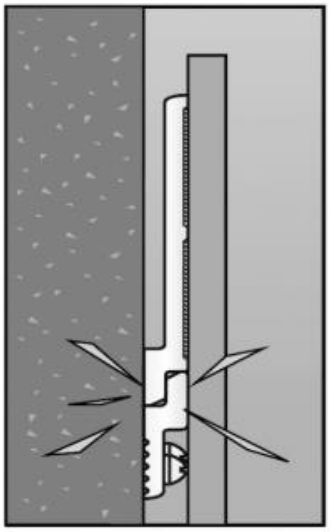

°element® DESIGNS HOME

Glass Magnetic Markerboard Quick Ship Program

Quick-ship glass magnetic markerboard program designed for residential or commercial use. Proudly made in the USA.

Features & Benefits:

- 2 - 5 day standard lead time
- 3 standard sizes
- 6 standard colors
- Gloss and writeable matte
- Tempered safety glass
- Optional Magnetic backer
- Simple concealed Z-Clip mounting
- Sustainable water based paint
- Installation template included
- Drop ships to residential address
- Made in the USA

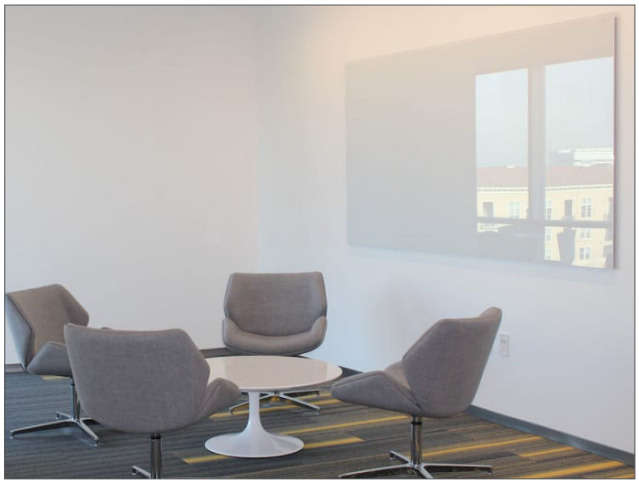

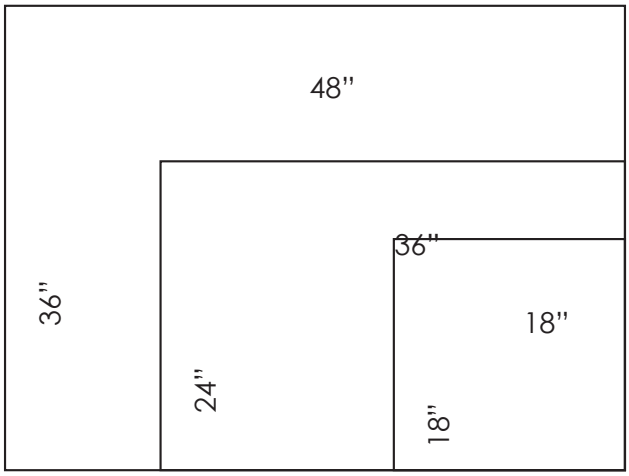

Cleaning Care & Maintenance:

Element Designs' backpainted glass can be cleaned with standard glass cleaners.

For the gloss and/or Satin surface of the glass, we recommend using 99% isopropyl alcohol, citrus or vinegar based cleaners on a clean, non-abrasive cloth or paper towel. If a heavy stain is present and does not come clean using the suggestions above, use isopropyl alcohol with a Mr. Clean Magic Eraser by gently scrubbing until the mark is removed.

For the backpainted water based coating, we recommend using a mildly damp (water only) on a non-abrasive cloth to gently clean the coated side of the glass.

NEVER use an abrasive cleaning pads such as a metallic sponge, solvents, strong detergents or other chemical agents when cleaning glass.

Note to Specifier:

Element Designs' backpainted glass is produced at the highest quality in the market due to our customer's expectations and the vast vertical and horizontal application range of the product. Element Designs only coats low-iron optically clear glass for minimal optical color distortion of the paint through the glass. The paint itself is water based and produces negligible VOCs during production. When designing with Element Designs backpainted glass, please specify: Element Designs, water based paint, low iron glass, flat edge polished, 100% tempered, light grey backer, custom color match capability, negligible VOC content and total opacity to prevent substitutions of inferior painted glass products.

Markerboard – Limited Warranty:

Additional magnetic markerboard specifications:
All magnetic markerboard consists of backpainted glass coated on low iron 4mm thickness tempered glass, a bonded 20 gauge galvanized ferrous metal to the paint side of the glass and multiple z-clip mounting systems for hanging the magnetic markerboard unit.
All Element Designs glass safety-tempered glass and magnetic markerboards should only use gloss glass for write ability and erase ability. The manufactured tempered glass meets the ASTM C-1036 Standard and is subject to permissible defects as defined in the referenced ASTM specification.

Element Designs recommends to only use rare earth magnets designed for magnetic glass markerboards. Rare earth magnets are powerful magnets, which are a pinching hazard. Do not ingest or inhale magnets. Attraction of magnets in the body may cause serious injury and require immediate medical care. Magnets may cause interference with cardiac devices including pacemakers and pose potential hazards to patients. Keep away from small children. Keep away from TVs, VCR tapes and all magnetic media. Please read all terms and conditions located on the back of your invoice or packing slip, as well as the colored warning sheet which accompanies your shipment.