element® DESIGNS

# Sliding Door Technical Manual

*Technical Specifications Are Subject To Change*

Element Designs is the leading manufacturer of custom aluminum frame doors in North America. All of our doors are built to our customers' specifications within 1/16". Our aluminum frame door program offers numerous profile options in several finishes and a vast selection of inserts to accent virtually any interior application. Element Designs can provide complete door systems with sliding hardware and guides/ rails cut to size, making the door installation process simple.

Our customer service, quick lead times and quality are the foundation of our company. Our nation-wide network of sales representatives and distributor locations provide a superior level of support to our customers and are always available to assist you with your order.

## TABLE OF CONTENTS

Design Guide: Aluminum Door Profiles ..... 3
Design Guide: Aluminum Door Finishes ..... 4
Design Guide: Aluminum Door Divider Rails ..... 5
Handle Boring Specifications ..... 6
Large Sliding Doors RO44 Components & System Information ..... 7
Large Sliding Doors RO44 Carrier Kits & Single Tracks ..... 9
Large Sliding Doors RO44 Double & Triple Tracks ..... 10
Large Sliding Doors RO44 Door Calculations ..... 11
Large Sliding Doors RO44 Installation Guide ..... 12
Small Sliding Doors SH 7035 Components & System Information ..... 16
Small Sliding Doors SH 7035 Carrier Kit & Track ..... 18
Small Sliding Doors SH 7035 Door Calculations ..... 19
Small Sliding Doors SH 7035 Installation Guide ..... 20
Warranty..... 21

Watch door installation video here:
https://www.youtube.com/watch?v=ZJWFRESIA8c&t=7s

## Frame Profiles

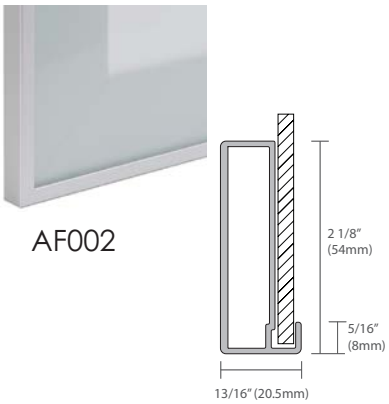


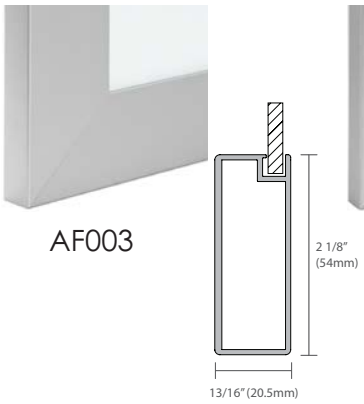


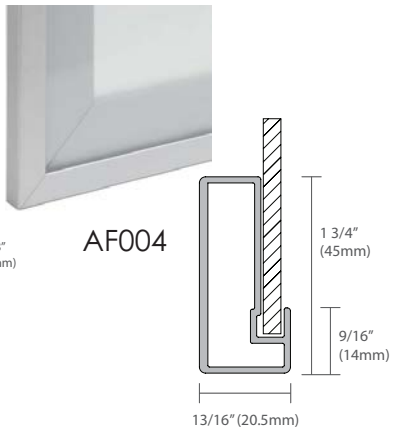


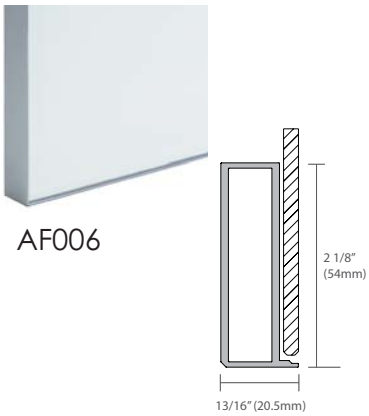

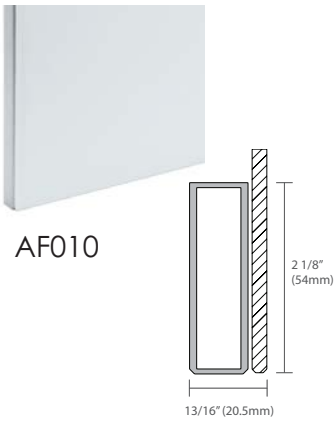


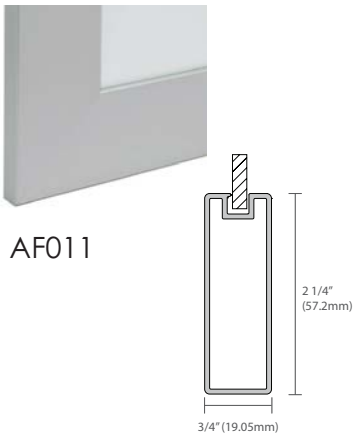


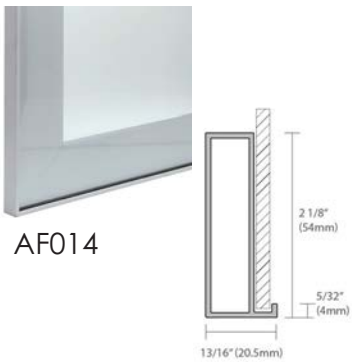


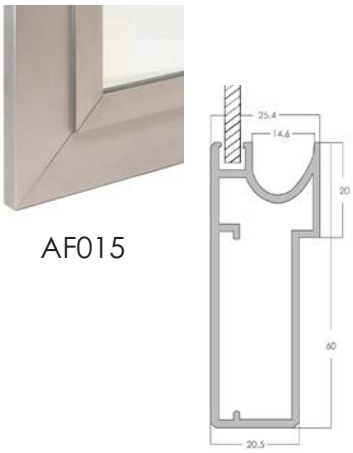


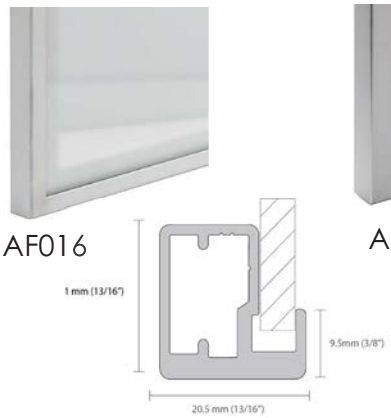


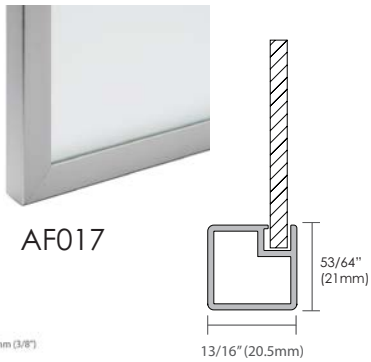


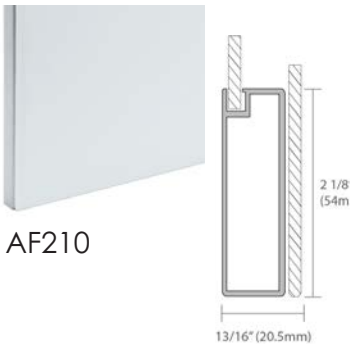




Technical Specifications Are Subject To Change

## Profile Finishes

### Anodized

natural aluminum (N)

brushed stainless (S)

### Coated

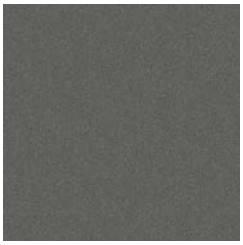
graphite (GR)

arctic silver (AS)

luxe bronze (LB)

gold (GLD)

modern brass (MB)

black (B)

onyx (X)
*matte black*

bronze matte (BZM)

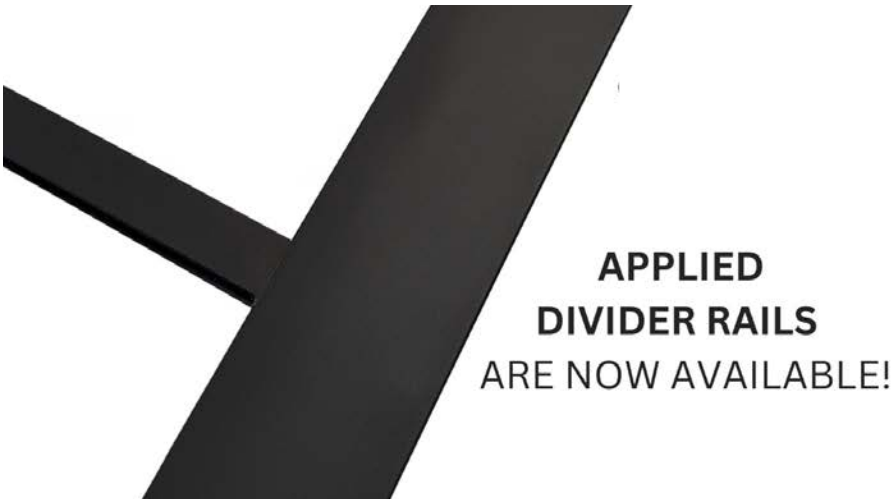

## *Divider Rails Unlock a New Level of Design Flexibility*

Bring elevated design and effortless customization to your projects with our new applied divider rails. Engineered for simple, straightforward on-site installation, adding these make it easy to create custom, precisely aligned mullion solutions without complex fabrication. Whether used in modern cabinetry, closets, or commercial interiors, they add a refined, architectural detail to our aluminum frame glass doors—offering a versatile design element that brings timeless character and a modern yet classic feel.

***WATCH OUR QUICK HOW-TO VIDEO TO SEE FOR YOURSELF HERE***

## *FEATURES & PRODUCT HIGHLIGHTS*

- *Available in all specialty coat finishes: Arctic Silver, Black, Bronze Matte, Copper, Gold, Graphite, Luxe Bronze, Modern Brass, & Onyx*
- *Custom, made-to-order allowing for widths up to 48"*
- *Applied to both front and back of the glass insert. Not available for any material other than glass.*
- *Compatible with most aluminum frame profiles. Not available for AF006, AF010, or AF210.*

# Handle Boring Specifiations

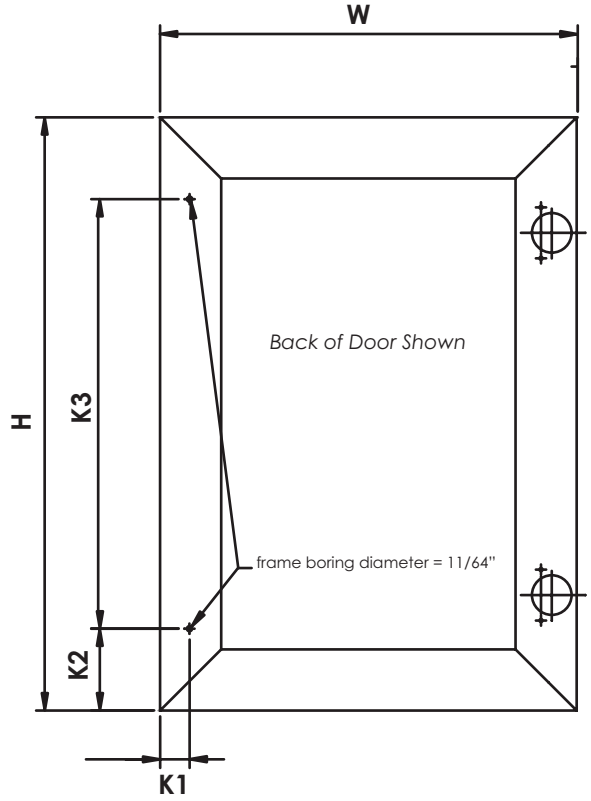


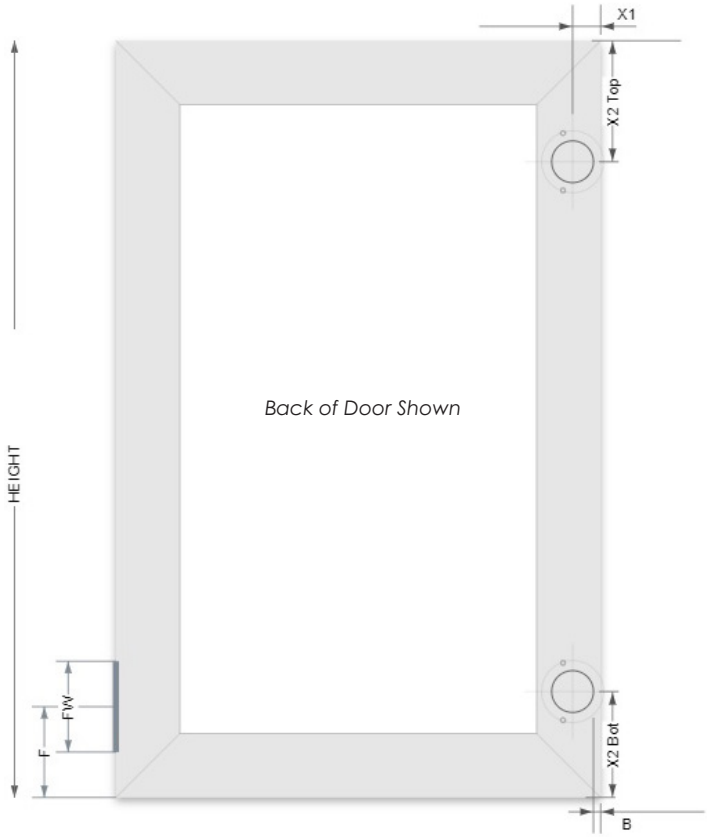


| Profile | K2 Standard (Knob/ Pull Center from door edge) | K2 Minimum (Knob/ Pull Center from door edge) | K1 Standard (centered on profile) | Std. Handle Boring Through Glass (If yes, customer MUST specify hole location at order) | Flush Mount P3-42 Minimum (center of 3" pull to door edge) |
|---|---|---|---|---|---|
| AF001 | 2.5" (63.5mm) | 2" (50.8mm) | .375" (10mm) | NO | 3.75" (95.2mm) |
| AF002 | 2.5" (63.5mm) | 2.25" (57mm) | 1.063" (27mm) | **YES** | 3.75" (95.2mm) |
| AF003 | 2.5" (63.5mm) | 2.25" (57mm) | 1.063" (27mm) | NO | 3.75" (95.2mm) |
| AF004 | 2.5" (63.5mm) | 2.25" (57mm) | 1.156" (29mm) | **YES** | 3.75" (95.2mm) |
| AF006 | 2.5" (63.5mm) | 2.25" (57mm) | 1.063" (27mm) | **YES** | 3.75" (95.2mm) |
| AF007 | 2.5" (63.5mm) | 2.25" (57mm) | 1.375" | NO | 3.75" (95.2mm) |
| AF009 | 2.5" (63.5mm) | 2.25" (57mm) | .875" (22mm) | NO | 3.75" (95.2mm) |
| AF010 | 2.5" (63.5mm) | 2.25" (57mm) | 1.063" (27mm) | **YES** | **NOT AVAILABLE** |
| AF011 | 2.5" (63.5mm) | 2.25" (57mm) | 1.125" (29mm) | NO | 3.75" (95.2mm) |
| AF012 | 3.625" (92mm) | 3.625" (92mm) | Contact Element | **YES** | 5.125" |
| AF013 | 3.625" (92mm) | 3.625" (92mm) | 0.5" (13mm) | NO | 5.125" |
| AF014 | 2.5" (63.5mm) | 2.25" (57mm) | 1.125" (29mm) | **YES** | 3.75" (95.2mm) |
| AF015 | 2.5" (63.5mm) | 2.25" (57mm) | 0.781" (20mm) | NO | 3.75" (95.2mm) |
| AF016 | 2.5" (63.5mm) | 2" (50.8mm) | Contact Element | **YES** | 3.75" (95.2mm) |
| AF210 | 2.5" (63.5mm) | 2.25" (57mm) | 1.063" (27mm) | **YES** | **NOT AVAILABLE** |

- Standard Aluminum Handle Boring Diameter = 11/64" (4.3mm)
- Standard Glass Handle Boring Diameter = 5/16" (8mm)

* Doors with standard handle hole in glass come with plastic grommet installed, which should be left in place when handle is installed to protect edge of glass hole and to prevent overtightening and glass shattering

# Bottom Glide RO44

**Design Guidelines:**

- Floor Sliding System, top guide and bottom track
- Multiple doors per system, inset or surface mount track
- Floor to ceiling and inset casework applications
- Reference Sliding Systems At A Glance for maximum door dimensions
- Doors weighing up to 132 lbs (60 kg)

Top Door Guides
(2 per door - Soft Close mechanisms available)

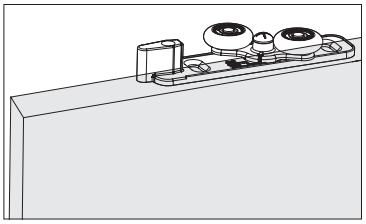

Adjustable Position Door Stops

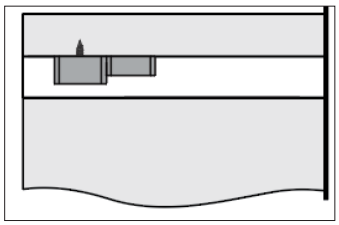

Bottom CarrierLoad Bearing Roller System
(2 per door - pre-installed)

Link to Sliding Door Hardware Video: Click Here

Optional Soft Close Mechanism (Comfort 240): Click Here

# Bottom Glide RO44

**Application Type:** LARGE sliding door applications
(floor to ceiling, closets / wardrobes, interior openings)

**Tracks & Guides:** Single, Double, & Triple surface mount floor tracks and top guides. Single inset floor track also available.

**Compatible Profiles: AF002, AF003, AF004, AF006, AF007, AF009, AF010, AF011, AF014, AF015**

**Multiple doors able to be on multiple planes of travel.**

## *FEATURES AND BENEFITS*

Brakes and/or accuators installed inside top guide maintain door position.

Soft close mechanisms also available and will replace standard brakes.

Easy height adjustment system.

High quality rollers provide smooth and silent sliding motion.

## *DESIGN GUIDELINES*

**Door weight max:** 60kg (~132 lbs)
**Door weight min:** 15kg (~33 lbs)
**Recommended Door height max:** 96"
(contact us for taller dimensions)
**Door width:**
Double soft close: min 27.5"
No soft close: min 20"

*Technical Specifications Are Subject To Change*

## Bottom Glide RO44 Carrier Kit includes:

2 Door Carriers (pre-installed)
Bottom of Doors

2 Door Guides (pre-installed)
Top of Doors

2 Brakes (customer installed)
In Top Guide if NO soft-close

## OPTIONAL Soft Close Mechanism (Comfort 240)

2 Soft Close Mechanisms (customer installed)
In Top Guide, INSTEAD of brakes.

---

### SINGLE Tracks & Guides

Surface Mount **Single** Track
90", 120", 138" lengths

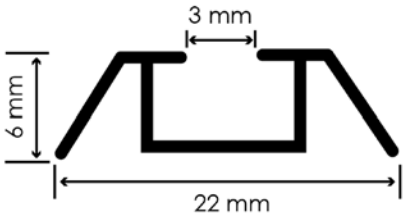

Inset **Single** Track
90", 118" lengths

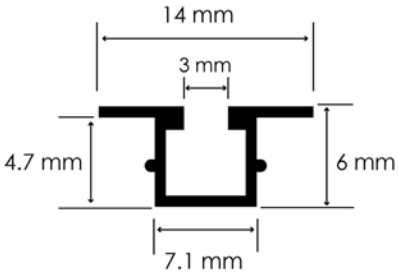


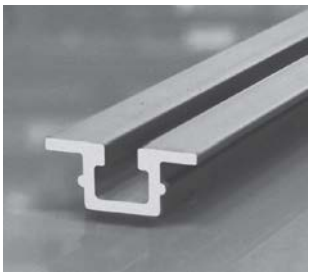

**Single** Top Guide
90", 120" or 138" lengths available

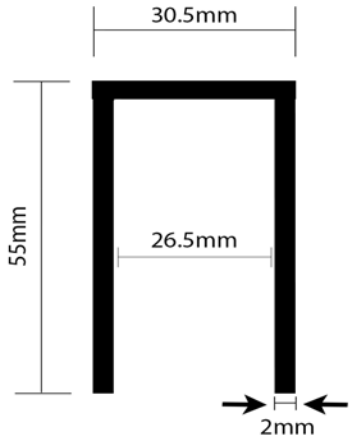

Technical Specifications Are Subject To Change

## DOUBLE Tracks & Guides

Surface Mount **Double** Track
90", 120", 138" lengths

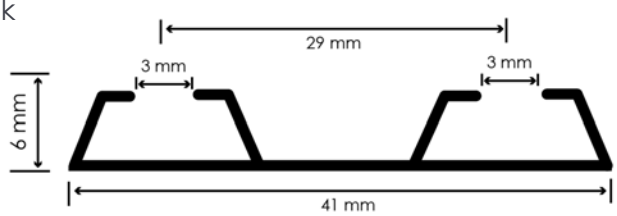

**Double** Top Guide
90", 120" or 138" lengths available

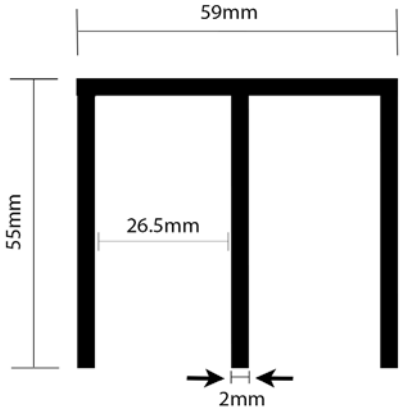

## TRIPLE Tracks & Guides

Surface Mount **Triple** Track
90", 120", 138" lengths

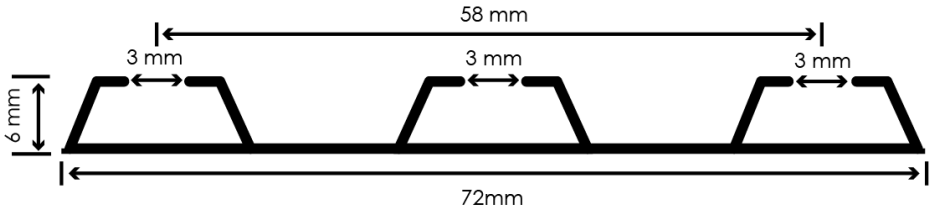

**Triple** Top Guide
90", 120", 138" lengths

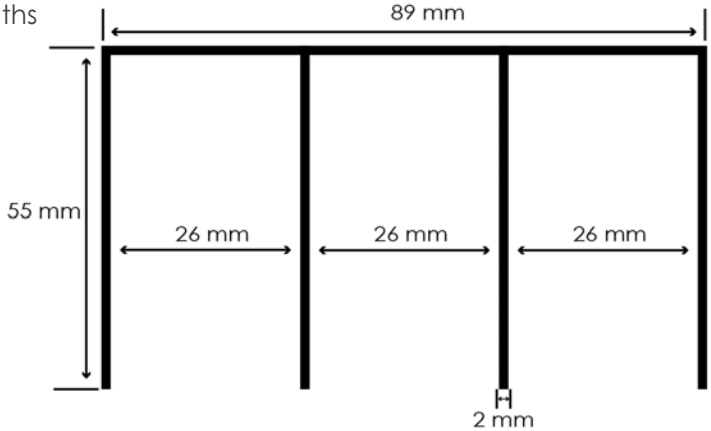


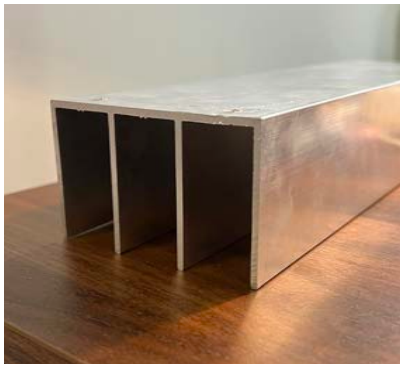

**Door Height Calculation**

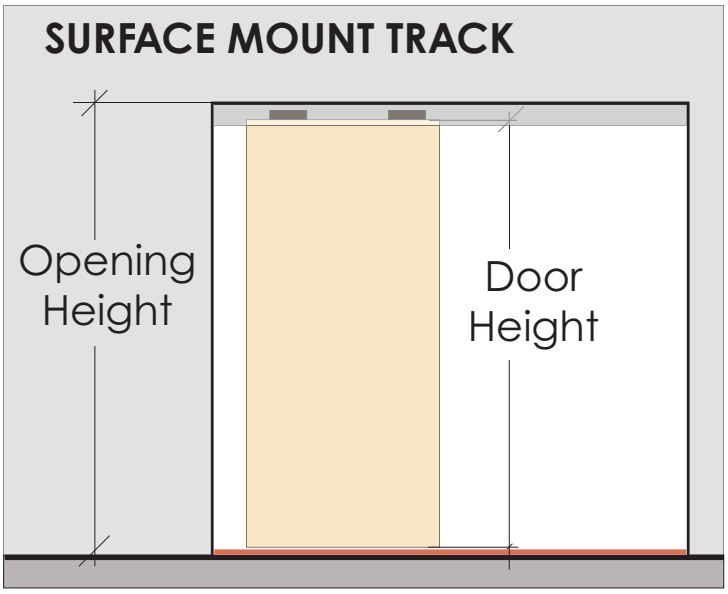


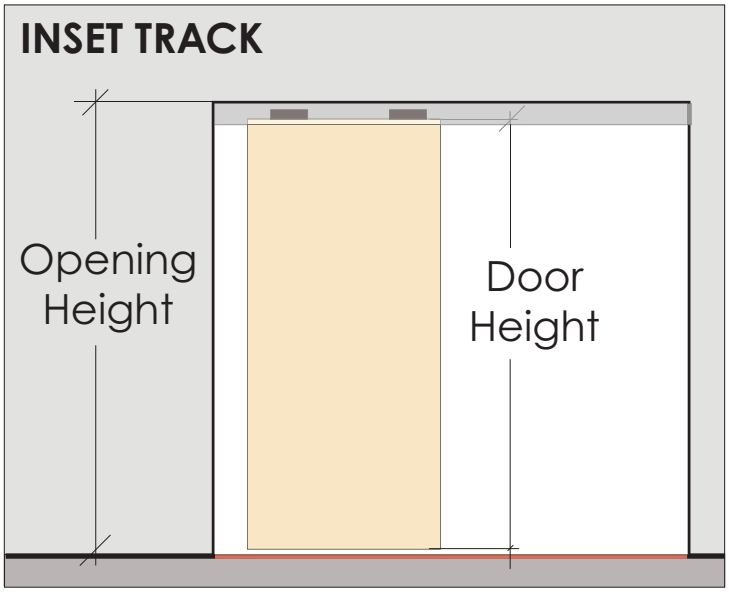


SURFACE MOUNT TRACK:
Door Height = Opening Height - 36mm

INSET TRACK:
Door Height = Opening Height - 31mm

**Door Width Calculation**

Door Width = (Opening width ÷ # of doors) + (profile width* ÷ 2)

*Profile Width:

AF002 = 2 1/8" (54mm)
AF003 = 2 1/8" (54mm)
AF004 = 1 3/4" (45mm)
AF006 = 1 3/4" (45mm)
AF007 = 2 3/4" (70mm)
AF009 = 2 1/2" (63.5mm)
AF010 = 2 1/8" (54mm)
AF011 = 2 1/4" (57.2mm)
AF014 = 2 1/8" (54mm)
AF015 = 2 11/32" (60mm)
AF210 = 1 3/4" (45mm)

**Door weight calculator can be found online: https://www.element-designs.com/technical**



*Technical Specifications Are Subject To Change*

## BEFORE INSTALLING TOP GUIDE - ADJUST TOP DOOR GUIDE WHEELS

Top of Door Wheel Adjustment - unscrew to loosen and adjust wheels to correct number; tighten the screw to lock in place.

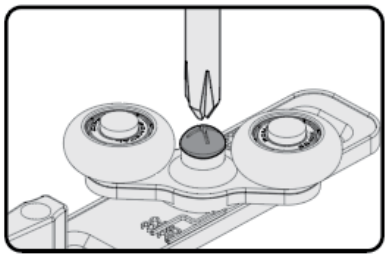

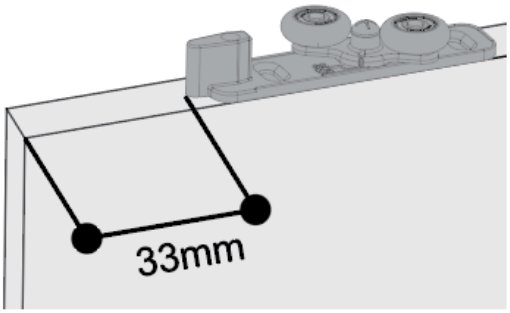


## TOP GUIDE INSTALLATION

Drill pilot holes holes in the center of each channel and space holes per drawing.

Use countersink screws when possible. This will avoid potential interference with guides if using a lightweight door or if door is slightly oversized.

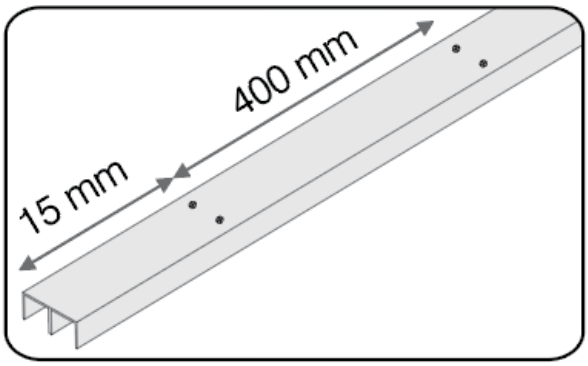


**TRACK & GUIDE PLACEMENT**
dimensions in mm

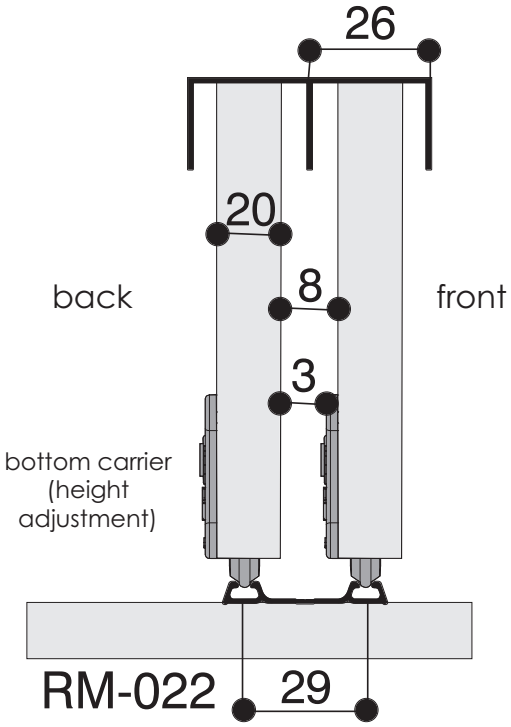


## BOTTOM TRACK INSTALLATION

Surface mount installed using double-sided tape, provided by installer.

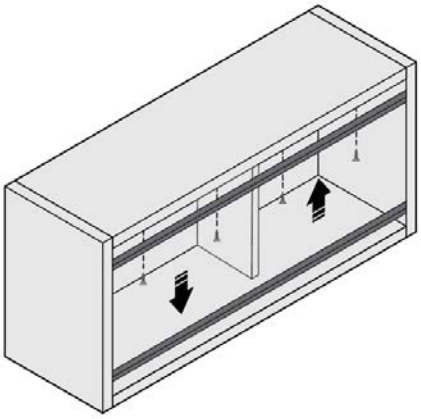

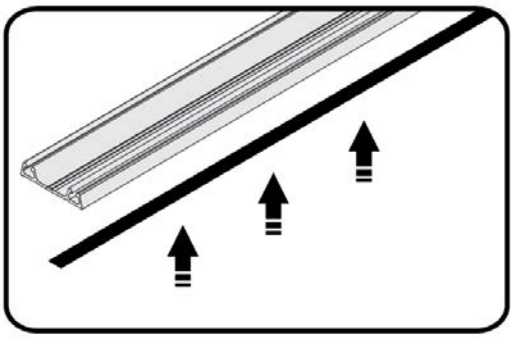

Tape not included, supplied by installer.

## BRAKE INSTALLATION

PRIOR to brake installation, pre-drill pilot holes into top guide. Install brake by attaching to the top guide with appropriate screw.

Brake STOP distance is determined by installed position. 20 mm minimum from wall.

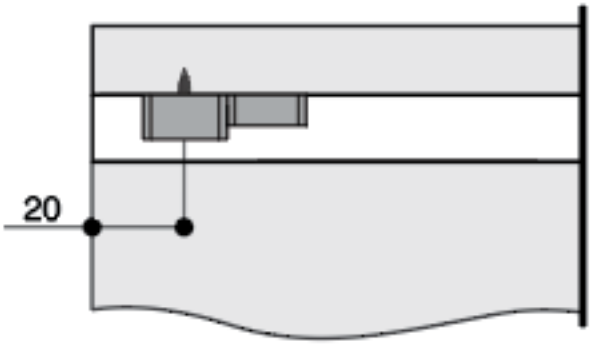


## DOOR INSTALLATION

PRIOR to door install, you must LOCK the floor carrier wheels into the lifted position, this will allow for the door to fit into the bottom track(s).

Lift door from both sides and install TOP first into the top guide and with floor carrier wheels locked into place, install door into bottom track. UNLOCK floor carrier wheels and guide them into the track.

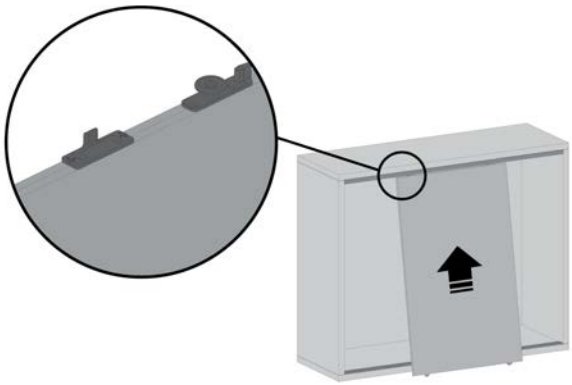

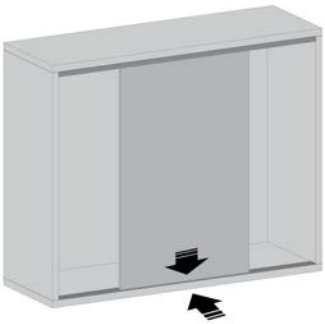

## FLOOR CARRIER WHEEL ADJUSTMENT

Door should be in LOCKED position (wheels up) prior to install and UNLOCKED to allow wheels down into bottom track. Height adjustment system uses phillips head screwdriver for up and down adjustment of up to 10 mm in height change..

UNLOCKED, the springs push wheels DOWN. LOCKED, the springs hold wheels UP, inside carrier.

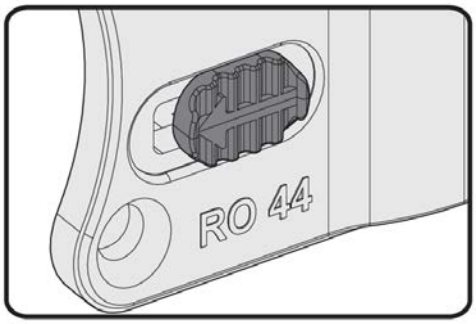


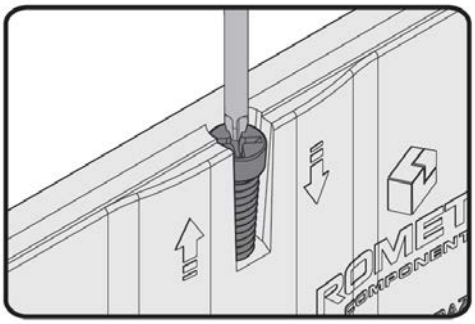

## Soft Close Mechanism Positioning in Top Guide

Double Guide, Double Track with 2 Doors Example:

FRONT

---

## PRIOR TO INSTALL: Activate Soft Close Mechansim:

Push latch FORWARD to activate, if not done so.

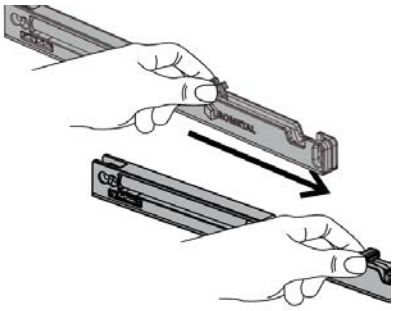

Top View

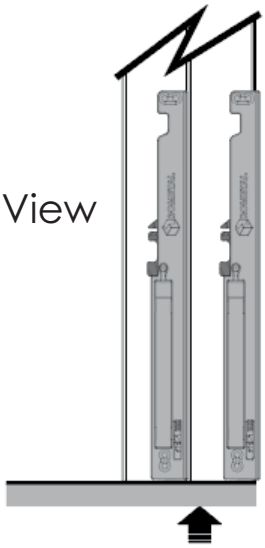

## Top & Side View of Soft Close Mechanism Positions in Top Guide

Side View

Side View

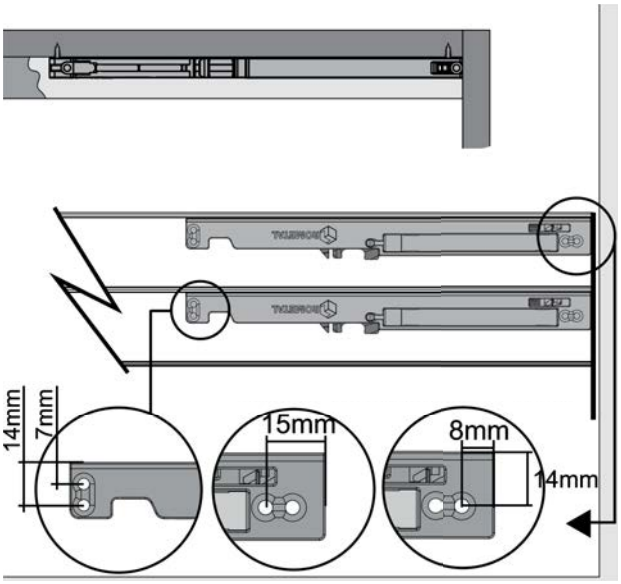


**INSTALL soft close mechanisms inside each top guide rail, on both left and right sides of door opening.**

PRIOR TO INSTALL: Pre-Drill pilot holes in top guide. Fasten using 3.5 x 22 CC screws.

**Soft close HOW-TO VIDEO:** https://www.youtube.com/watch?v=36zBKJI6Ayo&t=14s



Technical Specifications Are Subject To Change

## Pre-Installed Activator on Doors:

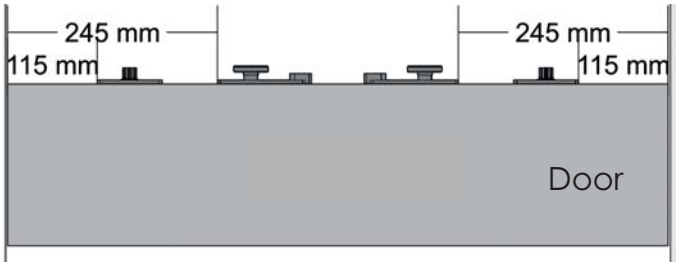


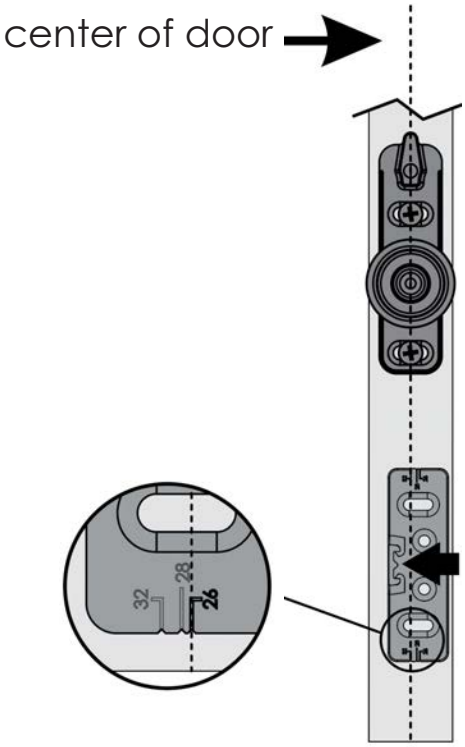


Tab positioned towards the back of door.

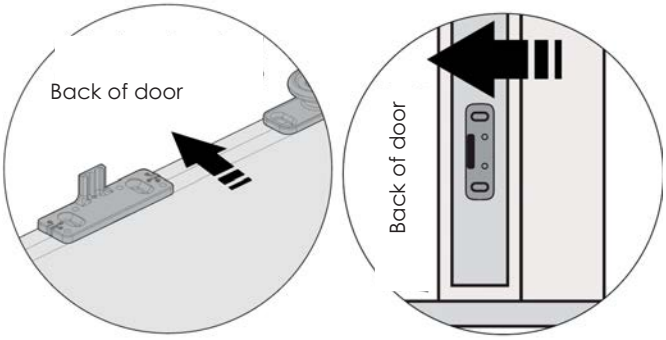


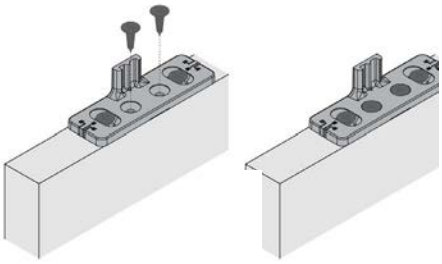

# SH 7035

**Design Guidelines:**

- Small Sliding System, top and bottom track
- Multiple doors per system, inset track
- Reference Sliding Systems At A Glance for maximum door dimensions
- Doors weighing up to 33 lbs
- Only recommended for AF017 and AF016 profiles

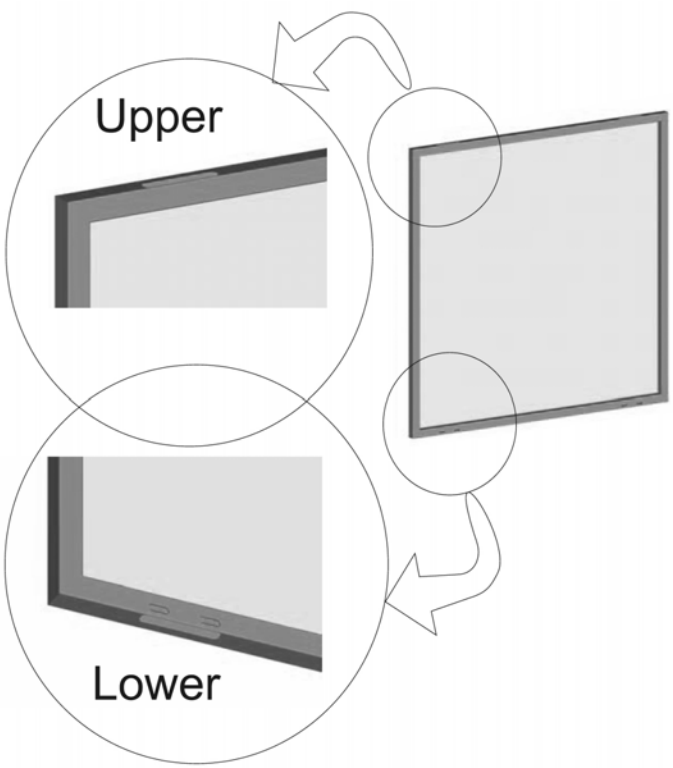


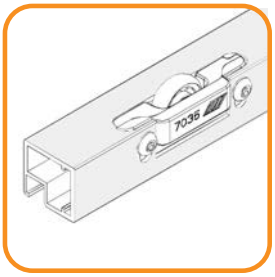


Small Door Carriers
(4 per door - preinstalled)

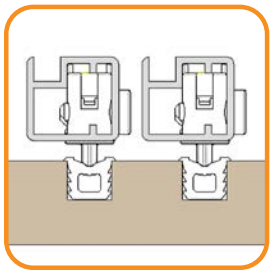

Inset Track
Up to 140"

# SH 7035 - Small Sliding Doors

**Application Type:** SMALL sliding door applications (cabinets, furniture, closets / wardrobes)

**Recommended Profiles:** AF016 and AF017

**Tracks & Guides:** single inset top and bottom track

**Frame height minimum:** 20.5mm (.813")

***FEATURES AND BENEFITS***

Easy adjustment and smooth movement.

Spring loaded carriers and guides prevent the door from jumping the track.

Flush mount carrier installation reduces the space/ gap between the doors.

***DESIGN GUIDELINES***

**Door weight max:** 15kg (~33 lbs)
**Recommended Door height max:** 48" (contact us for taller dimensions)

***NOT RECOMMENDED FOR USE WITH dECOLuxe SOLID ACRYLIC DOORS***

AF001 Profile, White Matte Backpainted Glass

①

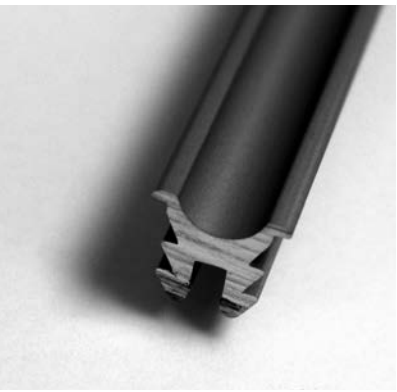

Inset Single Bottom Track

(SH 7035)

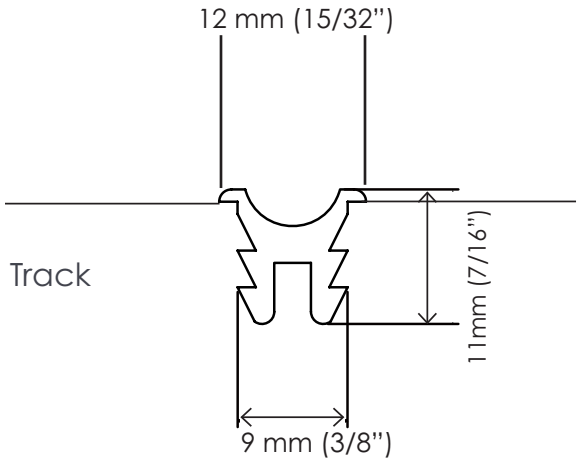


②

PRE-INSTALLED Door Carriers

(4 per door)

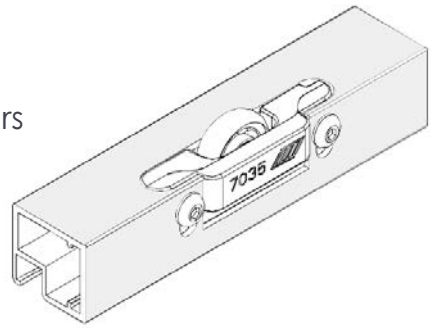


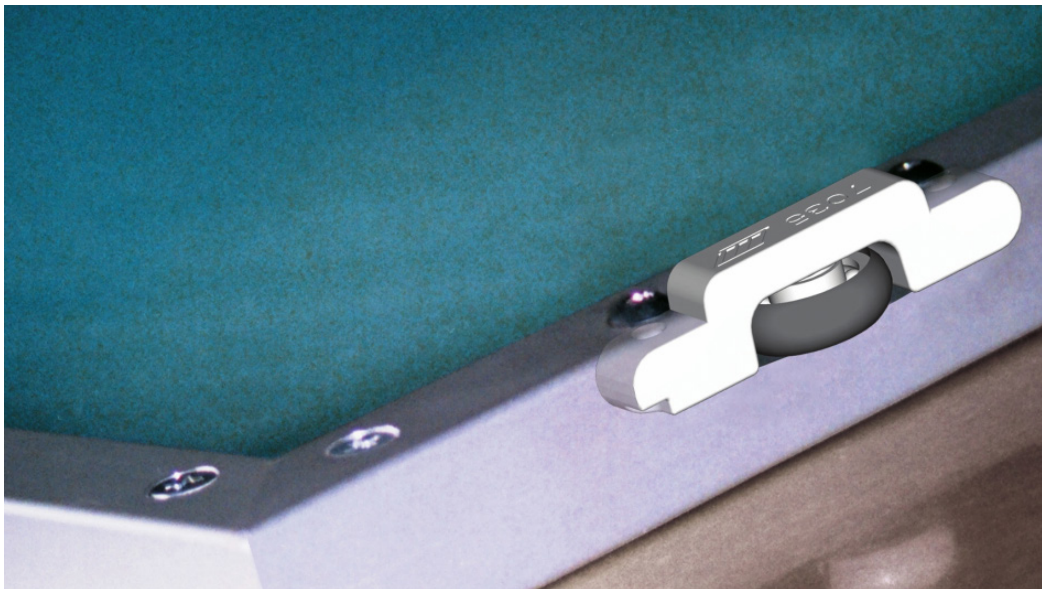

## Inset Track:

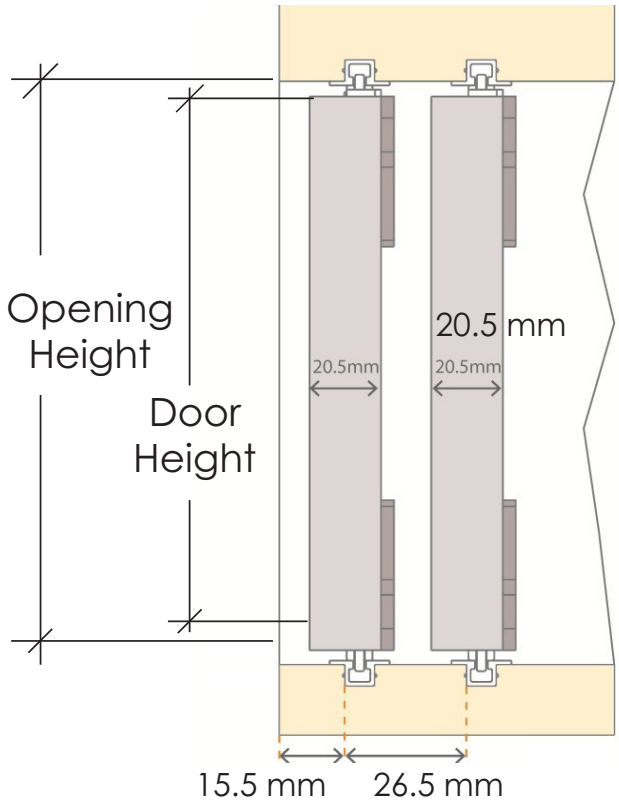


**Door Height** = Opening height - 5mm

**Door Width**
Below formulas will create overlap of full profile width, as illustrated,

**For 2 doors, 2 planes of travel:**
Door Width = (Opening width + profile width) / 2

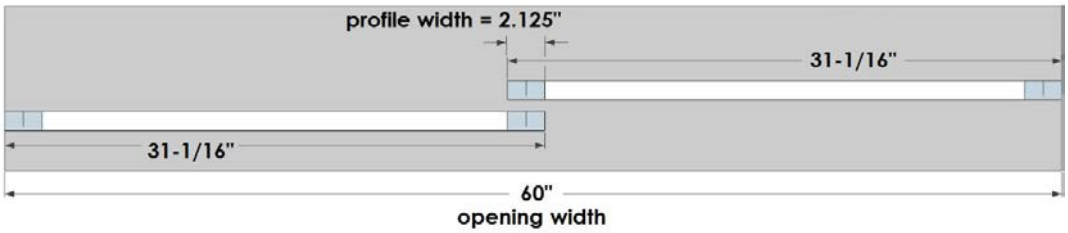


**For 3 doors, 3 planes of travel:**
Door Width = (Opening width + (profile width * 2) / 3

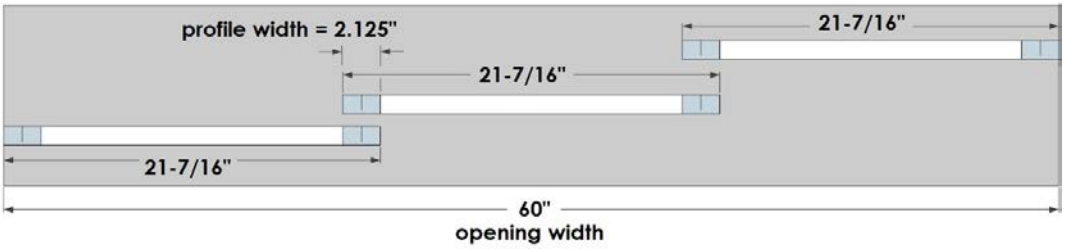


**For 4 doors, 4 planes of travel:**
Door Width = [(Opening width / 2) + (profile width) / 2

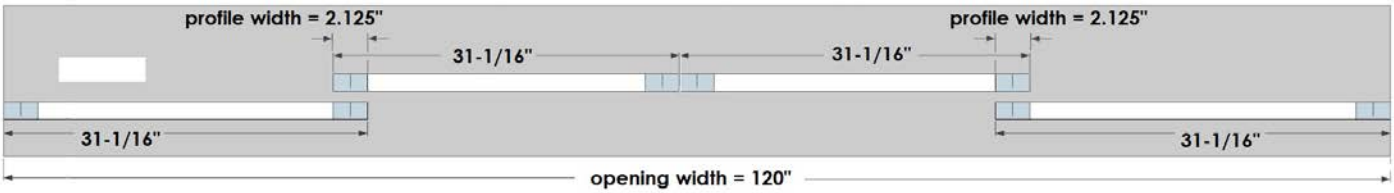


Profile Widths: AF016 = 13/16" (19mm)
AF017 = 13/16" (21 mm)



Technical Specifications Are Subject To Change

## Track Positioning & Installation

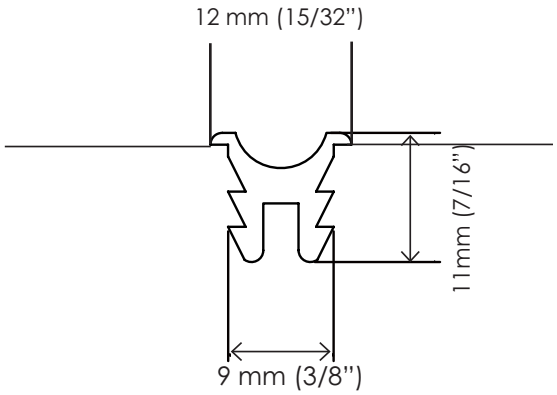


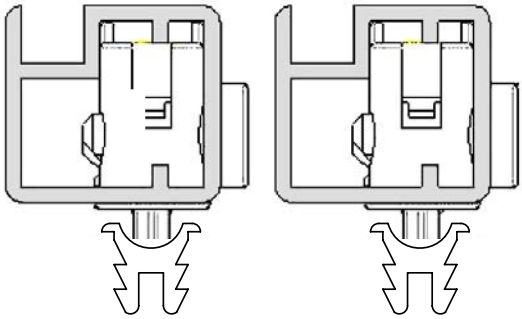

**PRE-INSTALLED HARDWARE**

Hardware will be pre-installed in 4 standard locations per door.

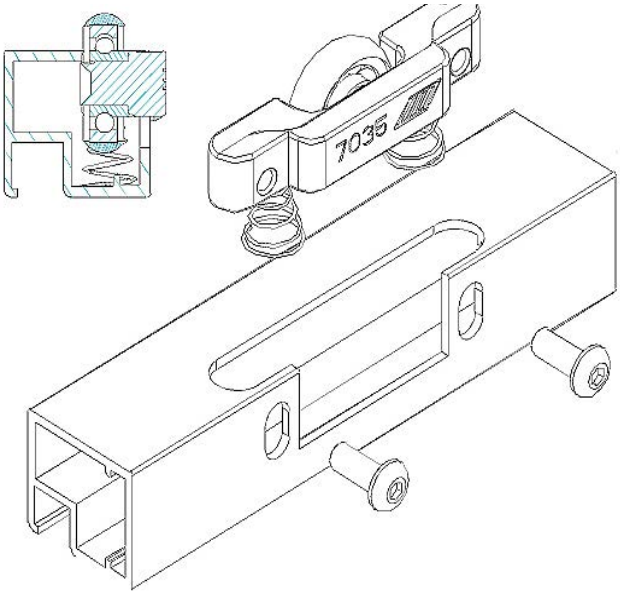


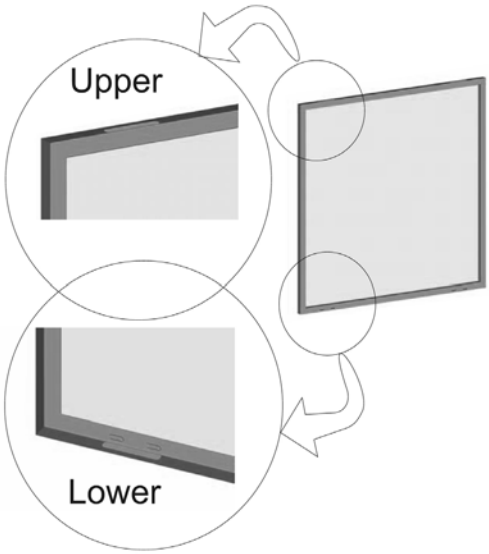


**DOOR INSTALLATION**

Install the back door first.

To install the door in track, insert the upper two rollers into the upper inner rail. Press the door upwards in order to go over the lower inner rail. The door will then fall into place in both upper and lower rails.

Repeat the installation with the front door.



Technical Specifications Are Subject To Change

Element Designs' aluminum frame cabinet door products are covered by a limited liability warranty from defects in material and workmanship over the functional lifetime of the doors. The warranty includes any defects in the fabricated door size, boring locations, aluminum framing flaws outside of quality standards, and glass imperfections outside of quality standards. Element Designs also warrants its doors from deterioration, discoloring, degrading, or overall changing through the course of the product's lifetime. This warranty does not apply if, in the judgment of Element Designs, the product fails due to damage from shipment, handling, storage, accident, abuse or misuse, or if it has been used or maintained in a manner not conforming to product's care instructions, has been modified in any way, or has been defaced. Repair by anyone other than Element Designs or an approved agent voids this warranty. The maximum liability of Element Designs is the product purchase price.

@elementdesignsinc

element-designs.com

info@element-designs.com