Title: WF-26 Suspension Subsystem Request For Quote Date: 4/27/26

Summary of Request:
Please provide a quotation for the manufacture, fabrication, and assembly of a full Formula SAE suspension system based upon the specifications and processes outlined in this document.

The main components of this suspension system include:
- Control arms
- Pushrods
- Rockers
- Anti-roll bar components
- Bearing cups and tabs
- Wheels and tires

This RFQ assumes low-volume production for one FSAE vehicle and spares. All dimensions, tolerances, and materials will be provided with CAD drawings.

Cost Summary
The total estimated suspension system cost reflects low-volume Formula SAE production using commercially available materials and components. Manufacturing processes were selected to minimize tooling costs, reduce complexity where possible, and maintain structural integrity. Purchased components (dampers, tires, wheels, sensors) are listed separately from components that are fabricated and manufactured from raw materials.

Recipients
Material Suppliers
- McMaster-Carr Supply Company
- Midwest Steel and Aluminum

Purchased Components
- Ohlins Racing AB
- FK Rod Ends
- Milspec Wiring
- Hoosier Racing Tire Corporation
- BRAID Wheels

Tires, wheels, and dampers are purchased components and are included for total vehicle suspension cost context

Document Index

All drawings include material callouts, critical dimensions, and tolerances necessary for manufacturing.

Document No.	File	Part
1	L-FLCA-1.SLDPRT	Front lower control arm 1
2	L-FLCA-2.SLDPRT	Front lower control arm 2
3	L-FUCA-1.SLDPRT	Front upper control arm 1
4	L-FUCA-2.SLDPRT	Front upper control arm 2
5	L-RLCA-1.SLDPRT	Rear lower control arm 1
6	L-RLCA-2.SLDPRT	Rear lower control arm 2
7	L-RUCA-1.SLDPRT	Rear upper control arm 1
8	L-RUCA-2.SLDPRT	Rear upper control arm 2
9	Front Pushrod.SLDPRT	Front pushrod
10	Rear Pushrod.SLDPRT	Rear pushrod
11	Rear Tie Rod.SLDPRT	Rear tie rod
12	WF26_(FrontARB)EndLink.SLDPRT	Front anti-roll bar endlink
13	WF26FrontARB.SLDPRT	Front anti-roll bar
14	wf26rearRocker(Real).SLDPRT	Rear rocker
15	WF26_Rocker_Spacer.SLDPRT	Rocker spacer
16	Node_top_Down_Spacer.pdf	Node Spacers
17	Push_Top_Down_Spacer.pdf	Push Rod Spacers

Title: WF-26 Suspension Subsystem Request For Quote Date: 4/27/26

Suspension System Overview:

1. Vehicle Type: Formula SAE Internal Combustion
2. Production Quantity:
   - 1 complete suspension system
   - Spares when noted
3. Primary Materials:
   - 4130 Chromoly Steel (tubing and sheet)
   - 1020 Mild Steel (bearing cups, tabs)
   - 4130 Steel (rockers)
4. Manufacturing Methods:
   - Laser cutting
   - CNC machining
   - Tube cutting and coping
   - TIG welding
5. Finish Requirements:
   - Steel components as-welded
   - Deburred edges on laser-cut parts
   - Threads cleaned after welding

Component Manufacturing Requirements:

Rockers

1. Material: 4130 Steel, 7 gauge
2. Quantity: 8 (4 plates front, 4 plates rear)
3. Manufacturing process:
   - Laser cut from plate
   - Deburred edges
4. No surface finish required

Bearing Cups

1. Material: 1020 Steel (round stock)
2. Quantity: 4
3. Manufacturing:
   - CNC machining (CAD models/drawings provided)
4. Bearings will be press-fit during final assembly

Anti-Roll Bar Components

1. Anti-Roll Bar Tube:
   - Material: 4130 Chromoly
   - OD: 0.75in
   - Wall thickness: 0.049in
   - Length: 24 11/32 inches

2. Moment Arms:
   - Material: 1020 Steel
   - Quantity: 4
   - Manufacturing: Laser cut
3. Endlinks:
   - Material: 4130
   - OD: 0.5in
   - Wall thickness: 0.049
   - Quantity: 2
   - Length: 6 15.32
4. Threading:
   -¼-28 threaded bungs
   - One right-hand and one left-hand thread per endlink

Control Arms

1. Material: 4130 Chromoly Steel
   - Outer Diameter: 0.625in
   - Wall Thickness: 0.049in
2. Components Included:
   - Front Upper Control Arms (Right / Left)
   - Front Lower Control Arms (Right / Left)
   - Rear Lower Control Arms (Right / Left)
   - Rear Lower Control Arms (Right / Left)
3. Tube Lengths:
   - Front Upper Fore: 10 1/2"
   - Front Upper Aft: 9 7/8"
   - Rear Upper Fore: 18 15/16"
   - Rear Upper Aft: 10 3/32"
   - Front Lower Fore: 13 29/32"
   - Front Lower Aft: 12 1/4"
   - Rear Lower Fore: 19 7/8"
   - Rear Lower Aft: 14 17/32"

4. Manufacturing Process:
   - Tube cutting to the specified length
   - Tube coping using guides
   - TIG welding of threaded bungs into the ends of tubes
5. Threading:
   - ¼-28 threaded bungs
   - Right-hand threads unless otherwise specified in drawings

Pushrods

1. Material: 4130 Chromoly Steel
   - Outer Diameter: 0.625in
   - Wall Thickness: 0.049in
2. Quantity: 4
3. Tube Lengths (TBD):
   - Front: 8 7/8
   - Rear: 10 5/32
4. Manufacturing Process:
   - Tube cutting to the specified length
   - TIG welding of the threaded bungs into the ends of tubes
5. Threading:
   - ¼-28 threaded bungs
   - One right-hand and one left-hand thread per pushrod for adjustability

Tie Rods

1. Material: 4130 Chromoly Steel
   - Outer Diameter: 0.625in
   - Wall Thickness: 0.049in
2. Components:
   - Front Tie Rods (Right / Left)
   - Rear Tie Rods (Right / Left)
3. Tube Lengths:
   - Front: 11 3/4
   - Rear: 8 1/8
4. Manufacturing Process:
   - Tube cutting to the specified length
   - TIG welding of the threaded bungs into the ends of tubes
5. Threading:
   - ¼-28 threaded bungs
   - One right-hand and one left-hand thread per tie rod toe adjustment

Push Rod Top Down Spacers

1. Material: 7075 Aluminum
   - Outer Diameter: 0.625in
   - Inner Diameter: 0.25 in
   - Length: 0.37 inches
2. Manufacturing Process
   - Lathe machined to get to size
3. Quantity: 12

Node Rod Top Down Spacers

1. Material: 7075 Aluminum
   - Outer Diameter: 0.625in

- Inner Diameter: 0.25 in
- Length: 0.625 inches

2. Manufacturing Process
   - Lathe machined to get to size
3. Quantity: 56

Note:
Component lengths may vary by corner of the vehicle (FR, FL, RR, RL) based upon tolerance changes during the manufacturing and fabrication process. The final dimensions will be provided via CAD before manufacturing. Equivalent manufacturing effort should be assumed per component.

Welding and Threading Requirements

1. Bung Welding:
   - Thread size: ¼-28
   - Right-hand thread: control arms
   - Right-hand and left-hand threads: pushrods, tie rods, anti-roll bar endlinks
2. Welding Method:
   - TIG welding
3. Post-weld steps:
   - Clean threads
   - Visual inspection for weld quality

Jigging fixtures

1. Control arm welding will be performed using a dedicated jig plate
2. Jig plate material: 1020 Steel
3. Jig ensures repeatability and alignment across all arms

Chassis Tabs

1. Quantity: 18 tabs
2. Material: 1020 Steel
3. Process
   - Laser cut
   - Welded to chassis at specified locations using 3-d printed Jigs

Assembly Scope

1. Install rod ends into welded bungs
2. Install jam nuts onto rod ends
3. Press-fit bearings into bearing cups
4. Install C-clips to retain bearings
5. Spacer installation at the following interfaces:
   - Pushrod to control arm
   - Pushrod to rocker
   - Coilover to rocker
   - Control arm to upright
   - Control arm to chassis
   - Tie rods (inboard and upright side)
   - Antiroll bar to rocker
   - Anti-roll bar to lever arms
   - Coilover to tab

Note: Final installation onto the car and alignment will be done in-house.

Manufacturing Timeline

Week 0 (9/29/25 - 10/5/25)
RFQ issued to suppliers

Week 1 (10/6/25 - 10/12/25)
Material receipt and laser cutting of flat components

1. Receive 1/8th in thick 7075 aluminum
2. Laser cut rockers (x8)
3. Deck stock for 1020 steel lower bearing cups (x4)
4. Deck stock for 1020 steel cylinder for upper bearing cups (x4)
5. Run the program to machine bearing cups
6. Laser cut 1020 for anti-rollbar moment arm (x4)

Week 2 (10/13/25 - 10/19/25)
Tube cutting, coping, and jig preparation

1. Cut .625 x .049 chromoly 4130 tubes for all control arms, push rod, and front / rear tie rod
2. Cut .75 x .049 chromoly 4130 for anti-roll bar
3. Cut 2 pieces of .5 x .049 for anti-rollbar endlinks
4. Make coping guides for all control arms
5. Control arm jig plate creation, ⅛ aluminum

Week 3 (10/20/25 - 10/26/25)
Bung welding and thread cleanup

1. Weld bungs onto the control arm tubes, right-hand threading ¼-28 bungs, 1 per tube
2. 1 right-hand thread, one left-hand thread for front tie rods, both rear tie rods, all pushrods, and both roll bar endlinks
3. Clean bungs to clean up threads

Week 4 (10/27/25 - 11/2/25)
Control arm fabrication and bearing cup machining

1. Mfg control arms, with jig plate, tubes, and bearing cups

Week 5 (11/3/25 - 11/9/25)
Chassis tab welding

1. Weld tabs (x18)

Week 6 (11/10/25 - 11/16/25)
Final assembly and integration

1. Assembly and integration
2. Add rod ends to the bungs

3. Press fit bearings into cups and secure with C-clips
4. Install tires on wheels

Bill of Materials

Hardware:

Part	Company	Part #	QTY	Single Unit Price	Cost	Application
RH rod end	FK rod ends	JMX4	24	$13.99	$335.76	Inboard toe points, control arms, push rod
LH rod end	FK rod ends	JMXL4	8	$13.99	$111.92	Outboard toe, push points
1/4 ID spherical bearing	FK rod ends	WSSX4T	8	$15.99	$127.92	Control arms
RH 1/4-28 tube end weld nuts	Mcmaster	94640A881	24	$7.02	$168.48	Inboard toe points, control arms, push rod
LH 1/4-28 tube end weld nuts	Mcmaster	94640A882	8	$7.02	$56.16	Outboard toe, push points
Needle bearings	Mcmaster	5905K333	8	$6.19	$49.52	Rocker pivot point
Thrust bearings	Mcmaster	5909K24	8	$3.81	$30.48	Rocker pivot point
Thrust Washer	Mcmaster	5909K241	16	$1.23	$19.68	Rocker pivot point
1/4 ID spacers 1/8 inch thick	Mcmaster	92510A760	16	$2.04	$32.64	Spacers for 1/4 in rod ends
Shoulder bolts	Mcmaster	AN4-13A	8	$0.59	$4.72	All the 1/4 in suspension points
Right hand Jam nuts	Mcmaster	AN316-4-R	8	$0.39	$3.12	Goes on right hand rod ends
Left hand Jam nuts	Mcmaster	AN316-4-L	8	$0.64	$5.12	Goes on left hand rod ends
Right hand nylock nuts	Mcmaster	AN364-4	50	$0.49	$24.50	For mounting 1/4 in bolts in rockers
1/4 1/16 wide wasers	Mcmaster	AN960-416	8	$8.29	$66.32	Spacers for the shoulder bolts
5/16 shoulder	Mcmaster	AN5-13A	8	$0.79	$6.32	Coilover mounting bolts

bolts						
5/16 nylock nuts	Mcmaster	AN364-5	12	$0.99	$11.88	Coilover mounting nuts
5/16 shoulder bolts drilled head	Mcmaster	AN5H-16A	4	$1.49	$5.96	Rocker pivot point
1/4 1 and 9/16 shoulder bolt	Mcmaster	AN4-20A	50	$1.82	$91.00	All suspension arm hardware
954 Bearing Bronze Flanged Sleeve Bearing	Mcmaster	2934T24	2	$11.72	$23.44	ARB bushings

Steel Tubing:

Total Amount of Tubing		Total Estimated Costs	Company
Round 4130 .625"	6 72" tubes	$168.30	Midwest Steel and Aluminum
Round 4130 .75"	24.5"	$18.33	Midwest Steel and Aluminum
Round 4130 .5"	7"	$6.51	Midwest Steel and Aluminum

Metal:

Total Amount of Metal		Total Estimated Costs	Company
4130- 0.05"-17GA	12" X 12"	$30.59	Midwest Steel and Aluminum
1020-0.0747 14GA	3' X 3'	$123.30	Midwest Steel and Aluminum
7075-T6-AL 0.125"	3" X 6"	$90.72	Midwest Steel and Aluminum
1020 - 0.125"	2' X 1'	$33.64	Midwest Steel and Aluminum

Title: WF-26 Suspension Subsystem Request For Quote Date: 4/27/26

Miscellaneous:

Part	Company	Part Number / Description	Quanitity	Unit price	Cost
Tires (Slicks)	Hoosier	16.0X7.5-10 R20 H43075R20 FSAE	4	$315.00	$1,260.00
Tires (wets)	Hoosier	16.0X7.0-10 W3 H44070W3	4	$315.00	$1,260.00
Wheels	Braid	10 X 5.5; Offset et4; Weight = 7lbs	8	$801.00	$6,408.00
Coilovers	Ohlins	TTX25 MKII	4	$715.00	$2,860.00
Springs	Ohlins	Hyperco TTX25 Springs (300 lb/in)	4	$62.50	$250.00
Springs	Ohlins	Hyperco TTX25 Springs (250 lb/in)	4	$62.50	$250.00
Springs	Ohlins	Hyperco TTX25 Springs (200 lb/in)	4	$62.50	$250.00
Springs	Ohlins	Hyperco TTX25 Springs (350 lb/in)	4	$62.50	$250.00
Linear Position Sensor	Milspec Wiring	Linear position sensor - 75mm	4	$321.80	$1,287.20

Summary:

	FK Rod Ends	McMaster-Carr	Midwest Steel and Aluminum	Hoosier	Braid	Ohlins	Milspec Wiring	Subsystem Totals
Hardware	$575.60	$599.34						$1,174.94
Steel Tubing			$193.14					$193.14
Metal			$278.25					$278.25
Miscellaneous				$2,520.00	$6,408.00	$3,860.00	$1,287.20	$14,075.20
Sponsor Totals	$575.60	$599.34	$471.39	$2,520.00	$6,408.00	$3,860.00	$1,287.20	$15,721.53

Grand total = $15,721.53

Images of Suspension System on Formula Car

Rear System:

Title: WF-26 Suspension Subsystem Request For Quote Date: 4/27/26

Front System:

CAD Drawings:

A-arm Jig

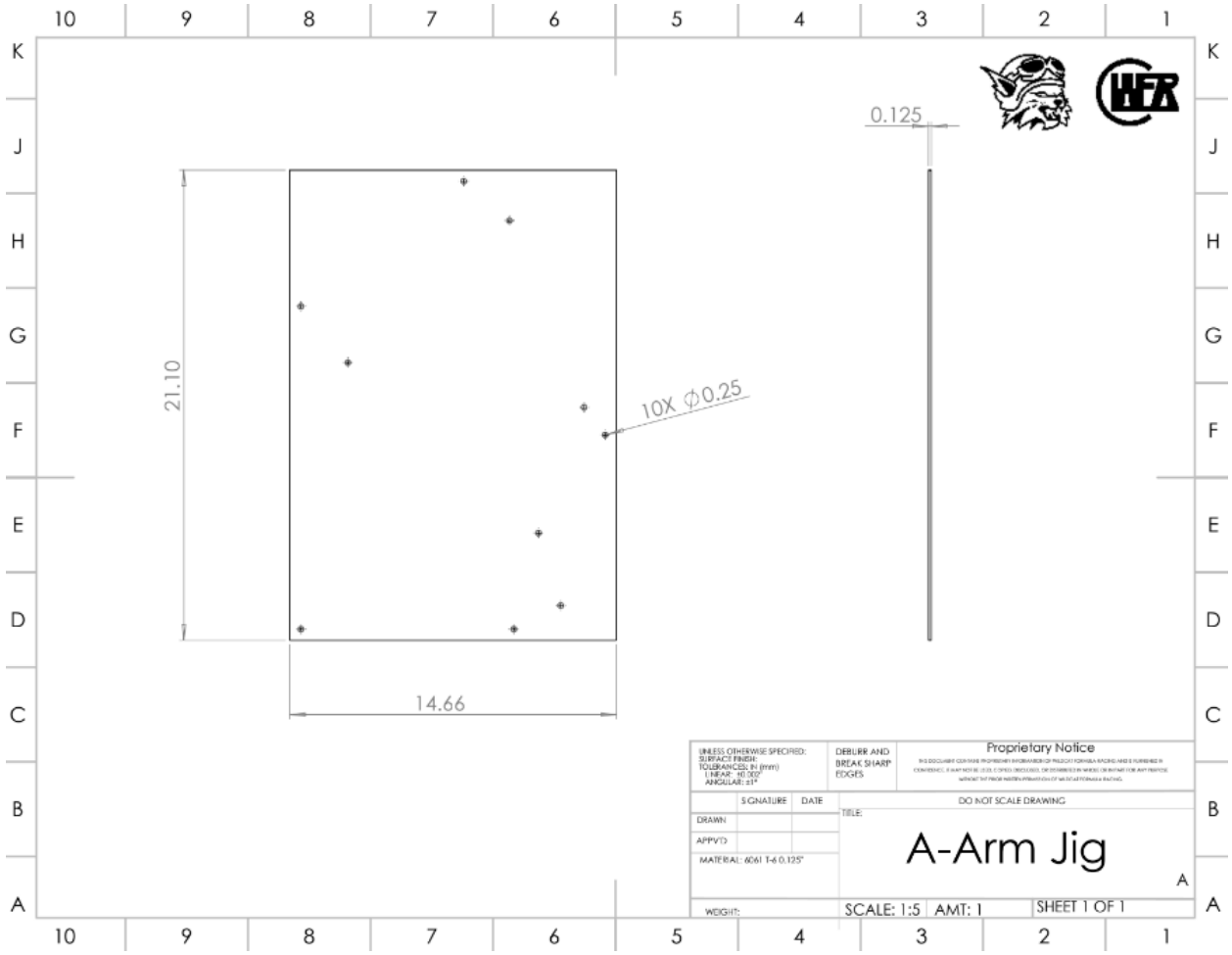

Title: WF-26 Suspension Subsystem Request For Quote Date: 4/27/26

Antiroll Arm

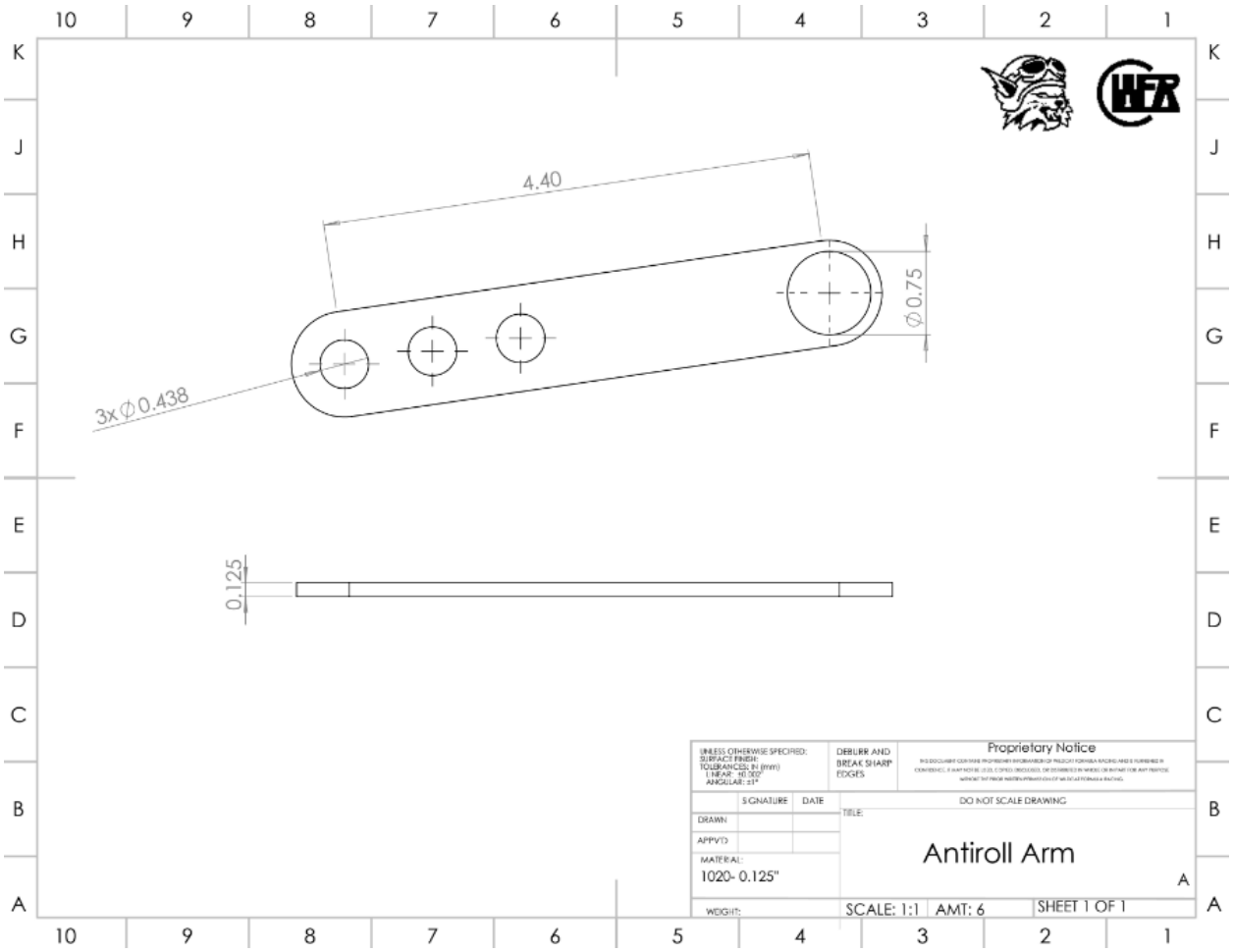

Front Lower Control Arm 1

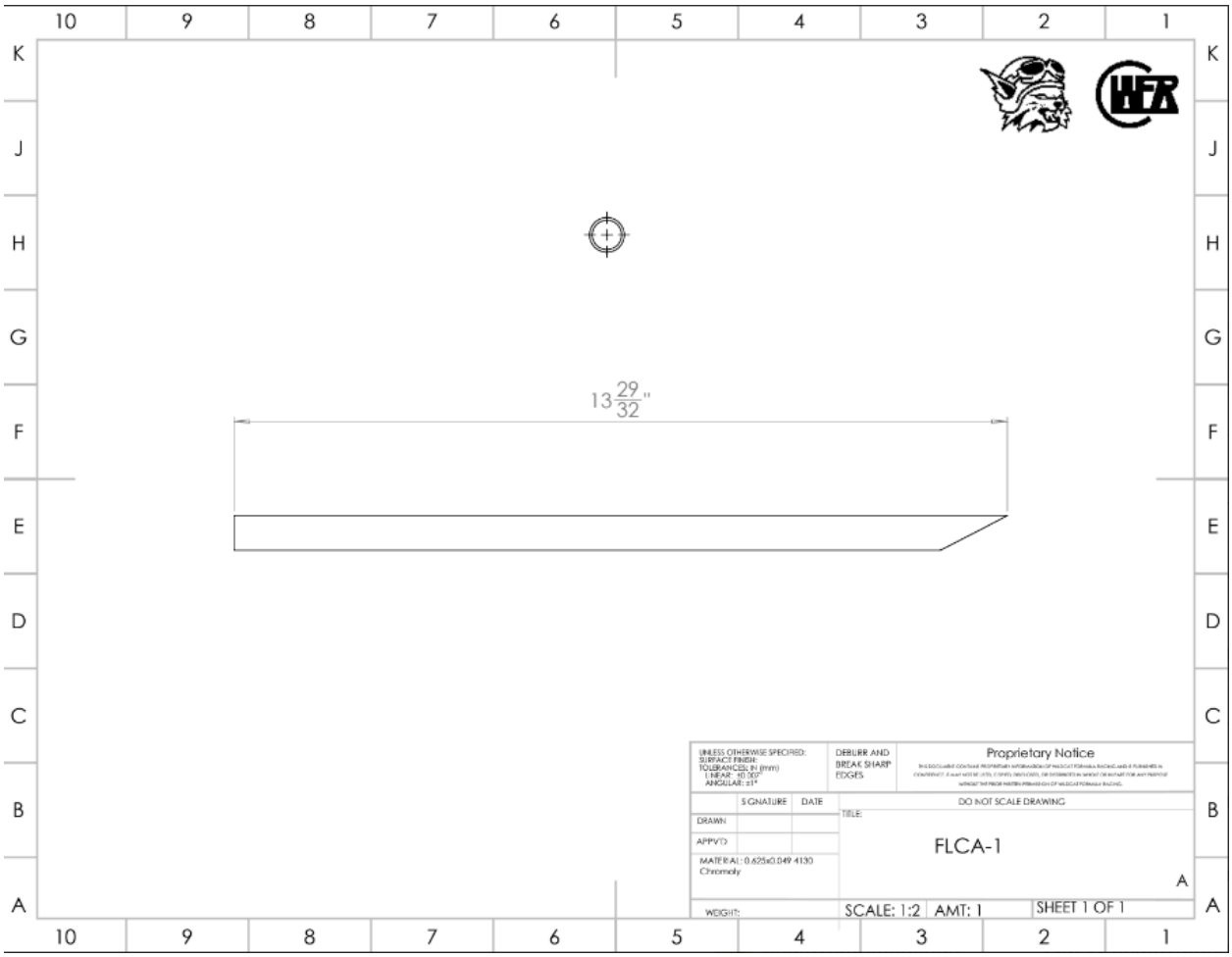

Front Lower Control Arm 2

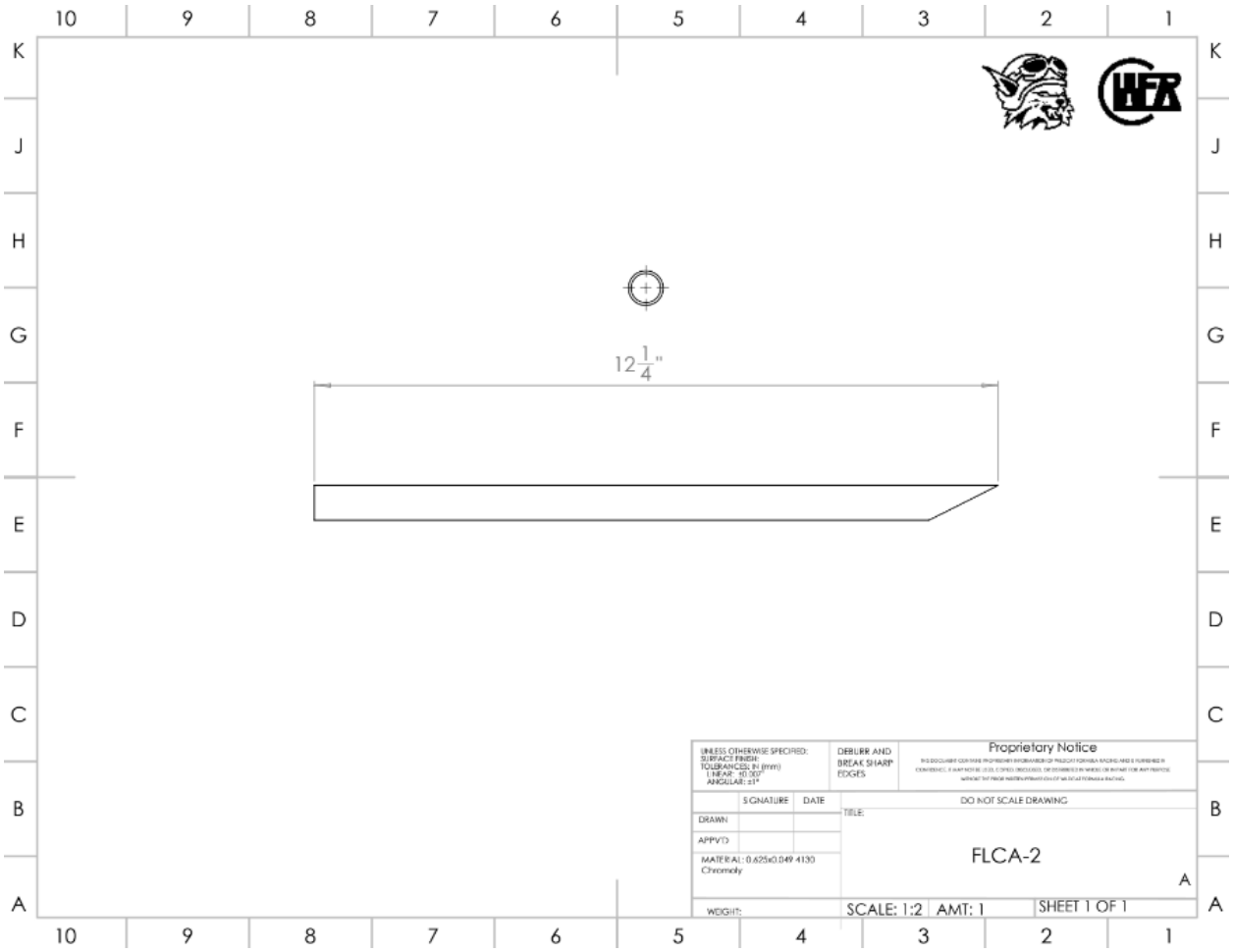

Title: WF-26 Suspension Subsystem Request For Quote Date: 4/27/26

Front Lower Control Arm (Assembly)

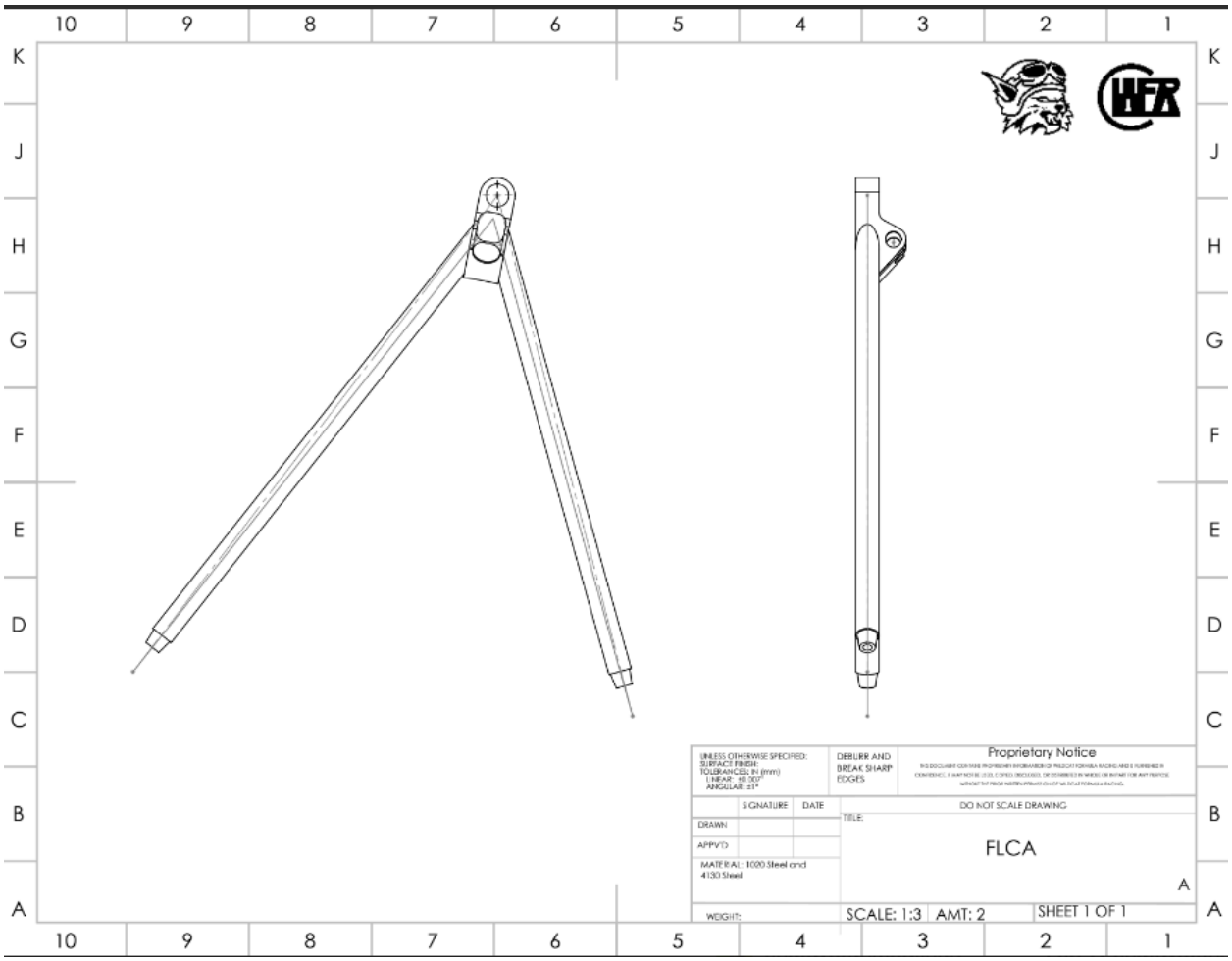

Title: WF-26 Suspension Subsystem Request For Quote Date: 4/27/26

Front ARB Assembly

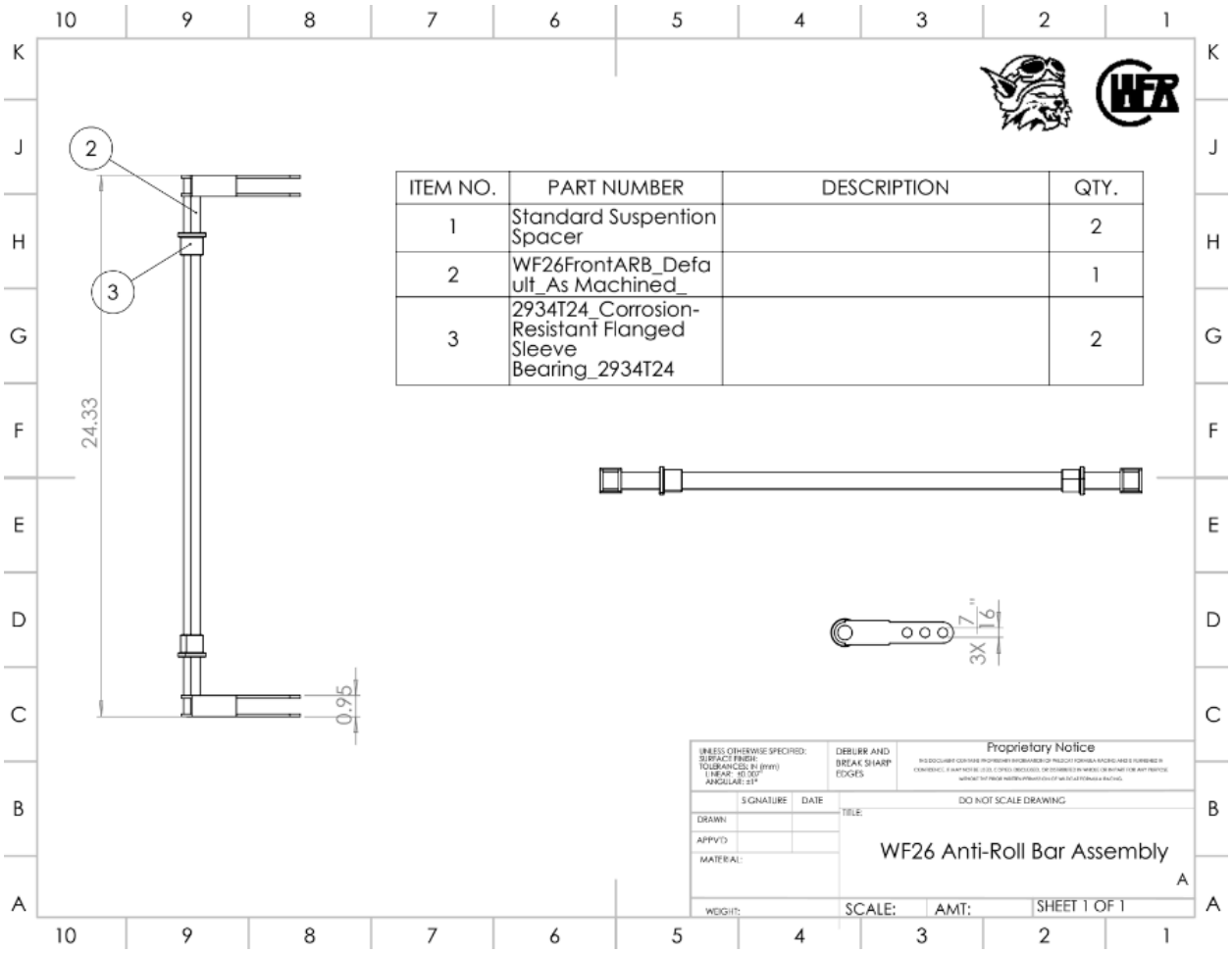

ITEM NO.	PART NUMBER	DESCRIPTION	QTY.
1	Standard Suspention Spacer		2
2	WF26FrontARB_Default_As Machined_		1
3	2934T24_Corrosion-Resistant Flanged Sleeve Bearing_2934T24		2

Front Rocker Plate

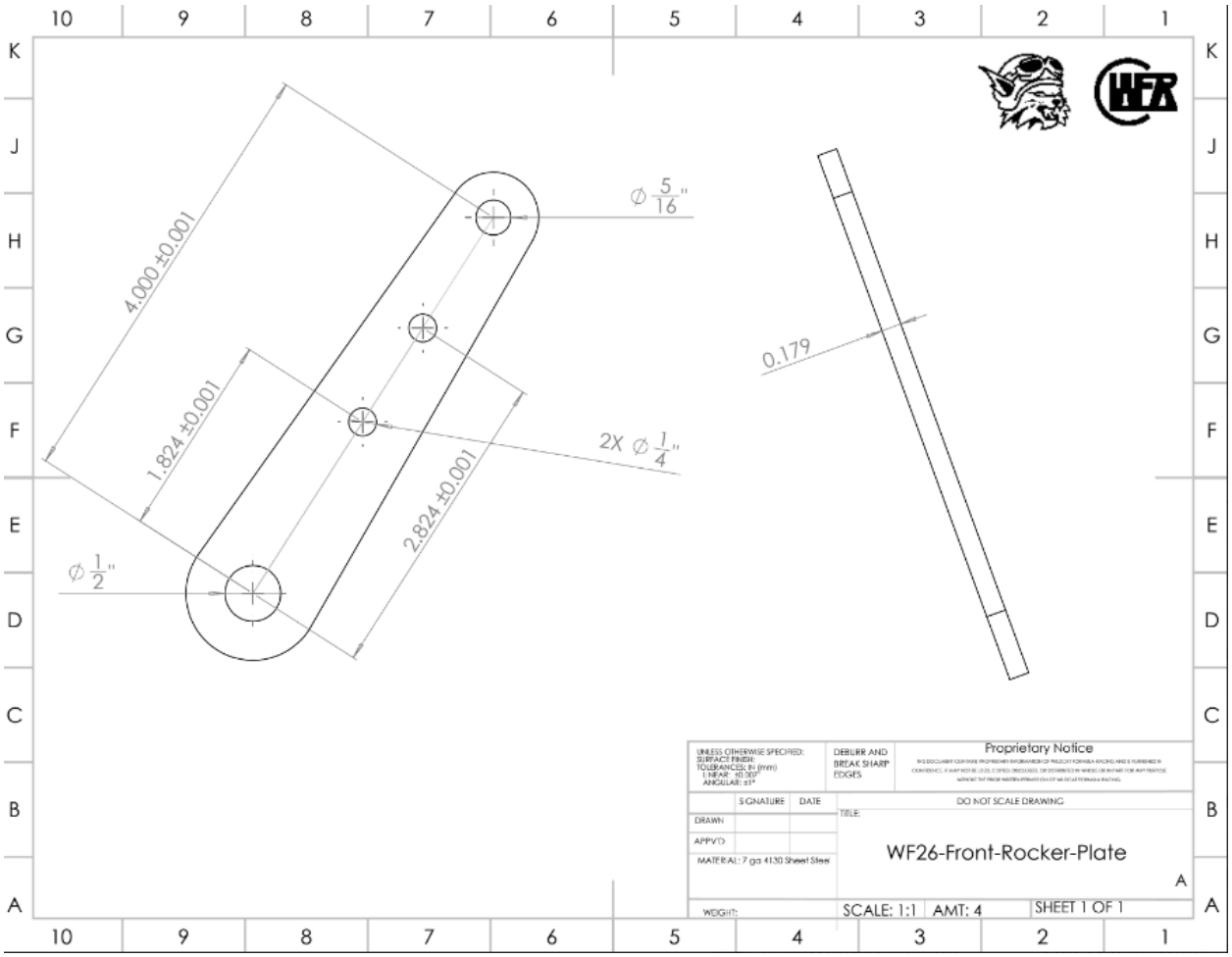

Front Upper Control Arm 1

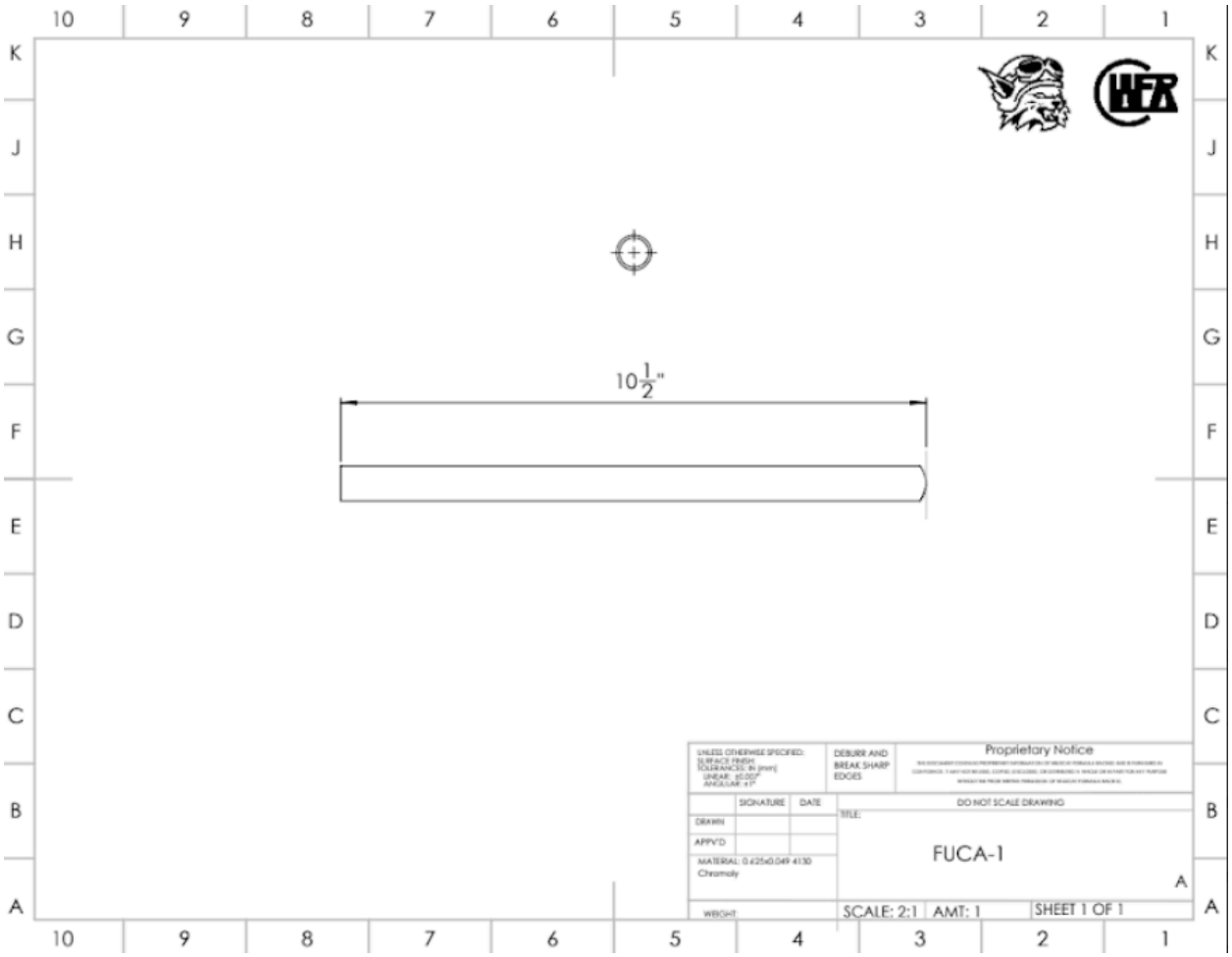

Front Upper Control Arm 2

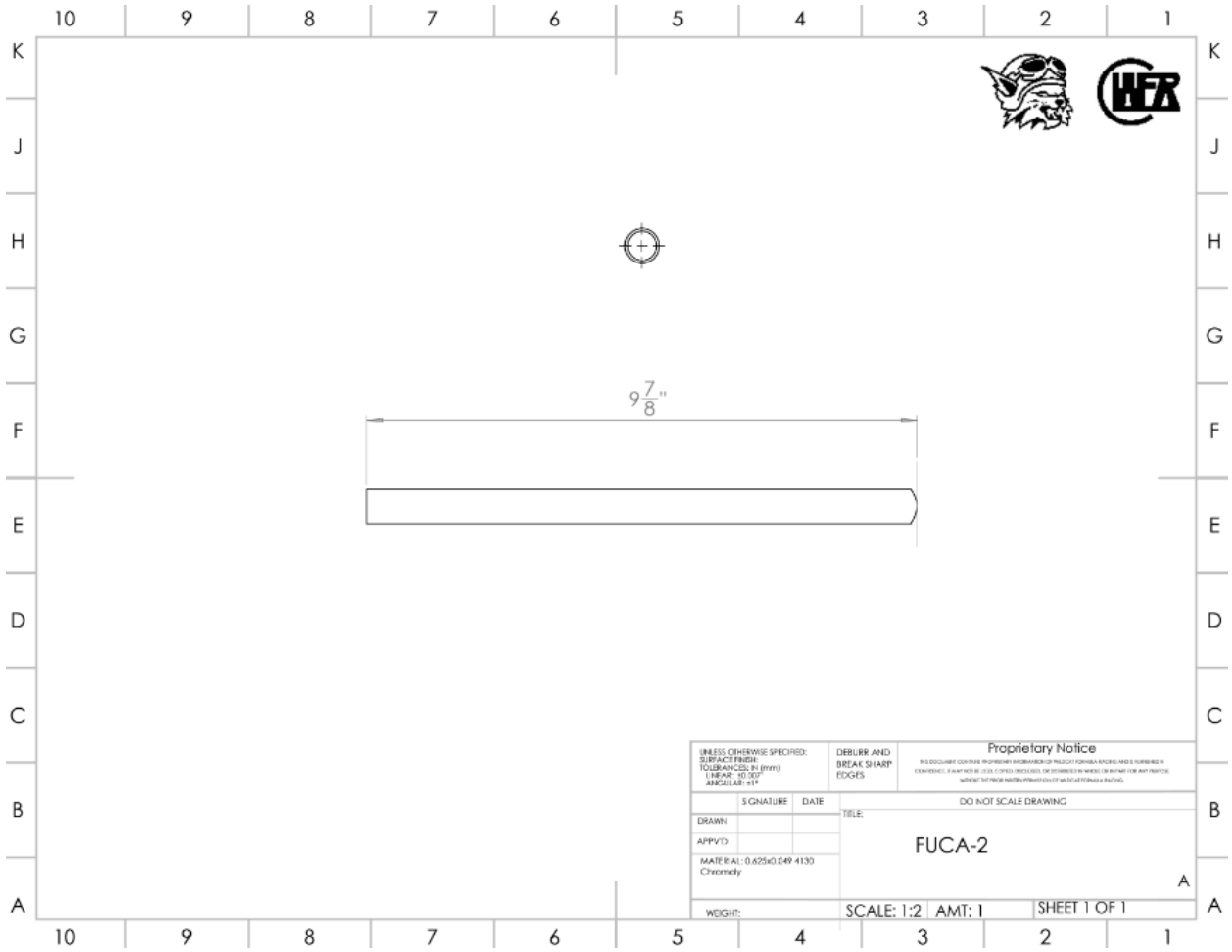

Title: WF-26 Suspension Subsystem Request For Quote Date: 4/27/26

Front Upper Control Arm (Assembly)

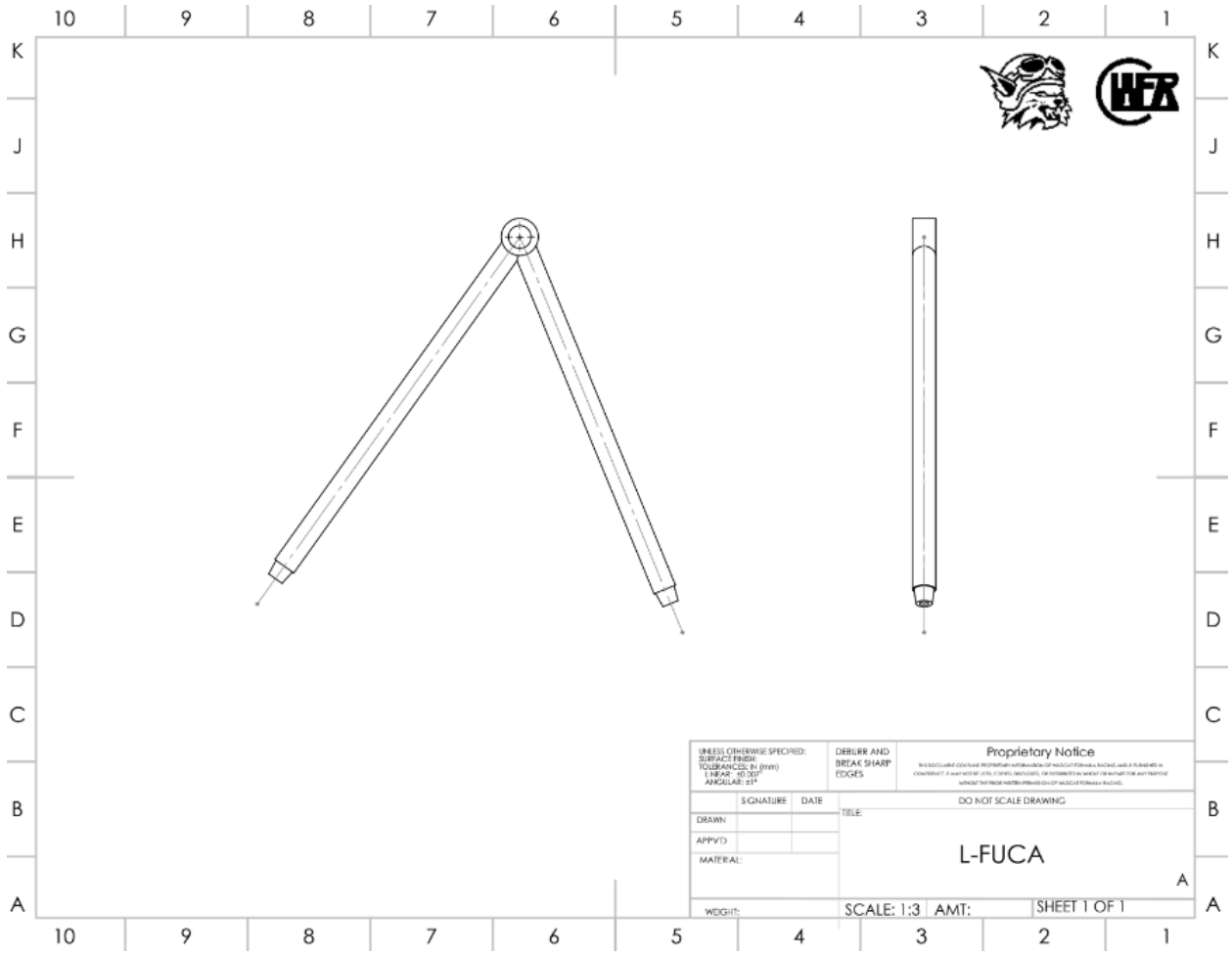

Rear Upper Control Arm

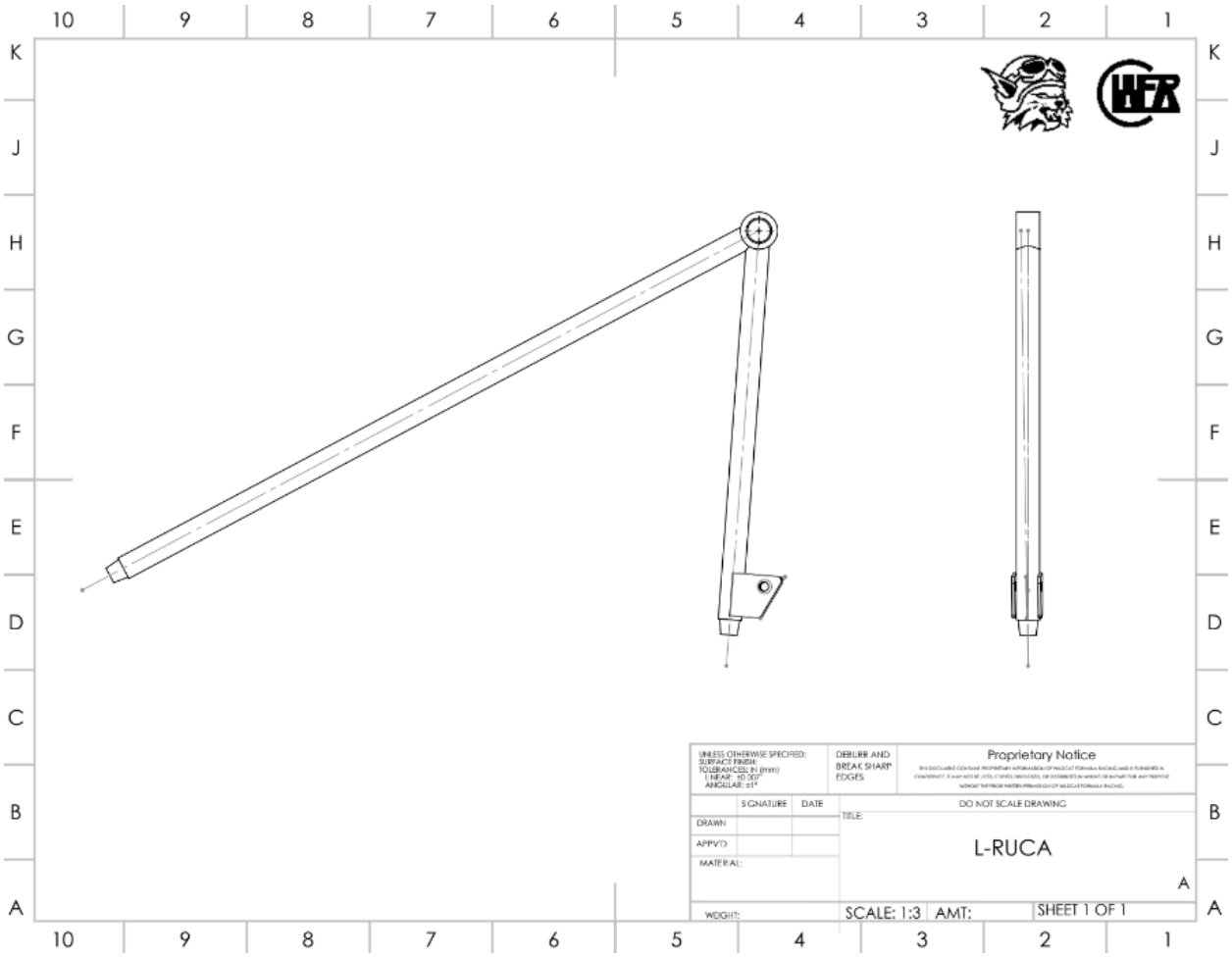

Pushrod Mount Cap

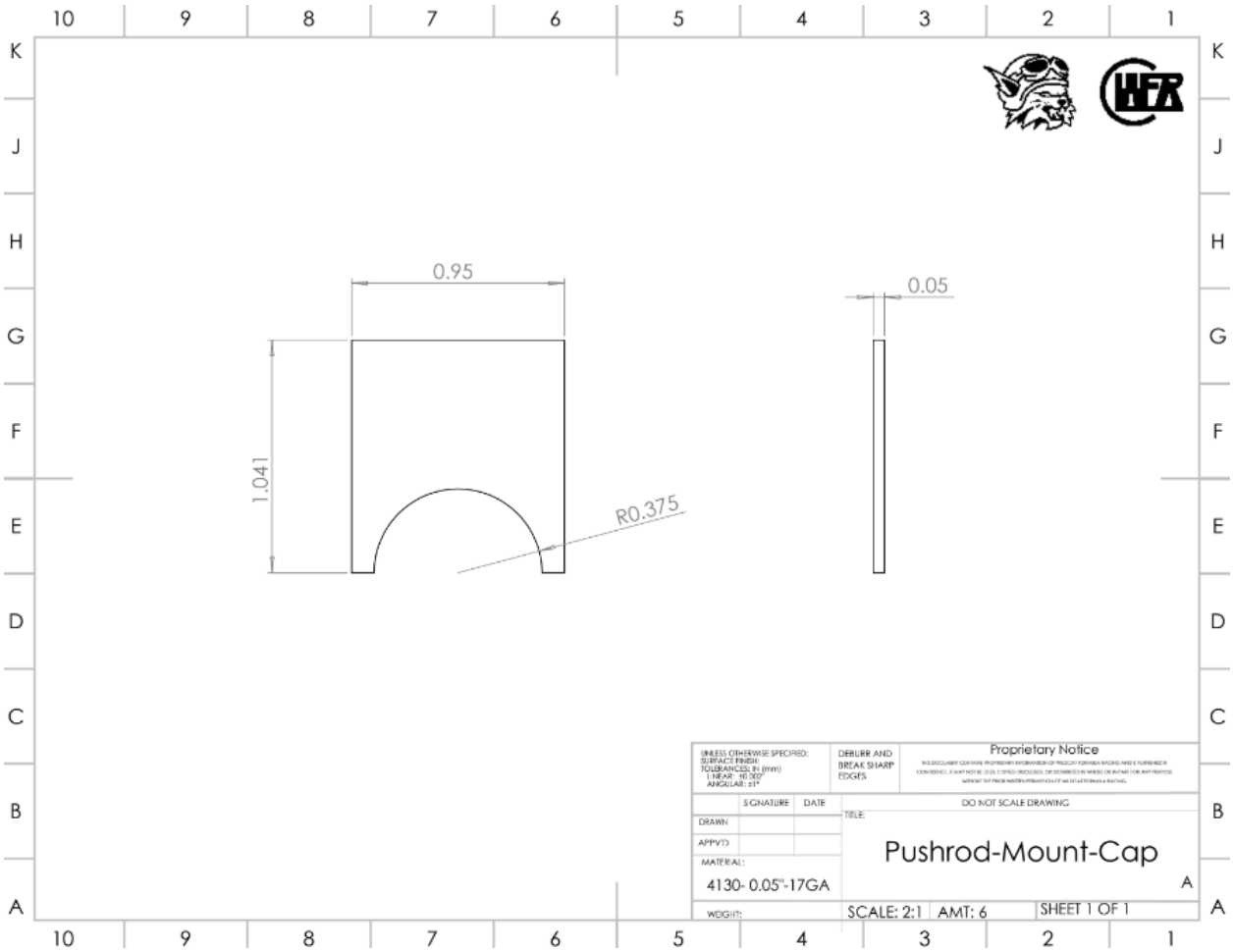

Title: WF-26 Suspension Subsystem Request For Quote Date: 4/27/26

Rear Rocker Plate

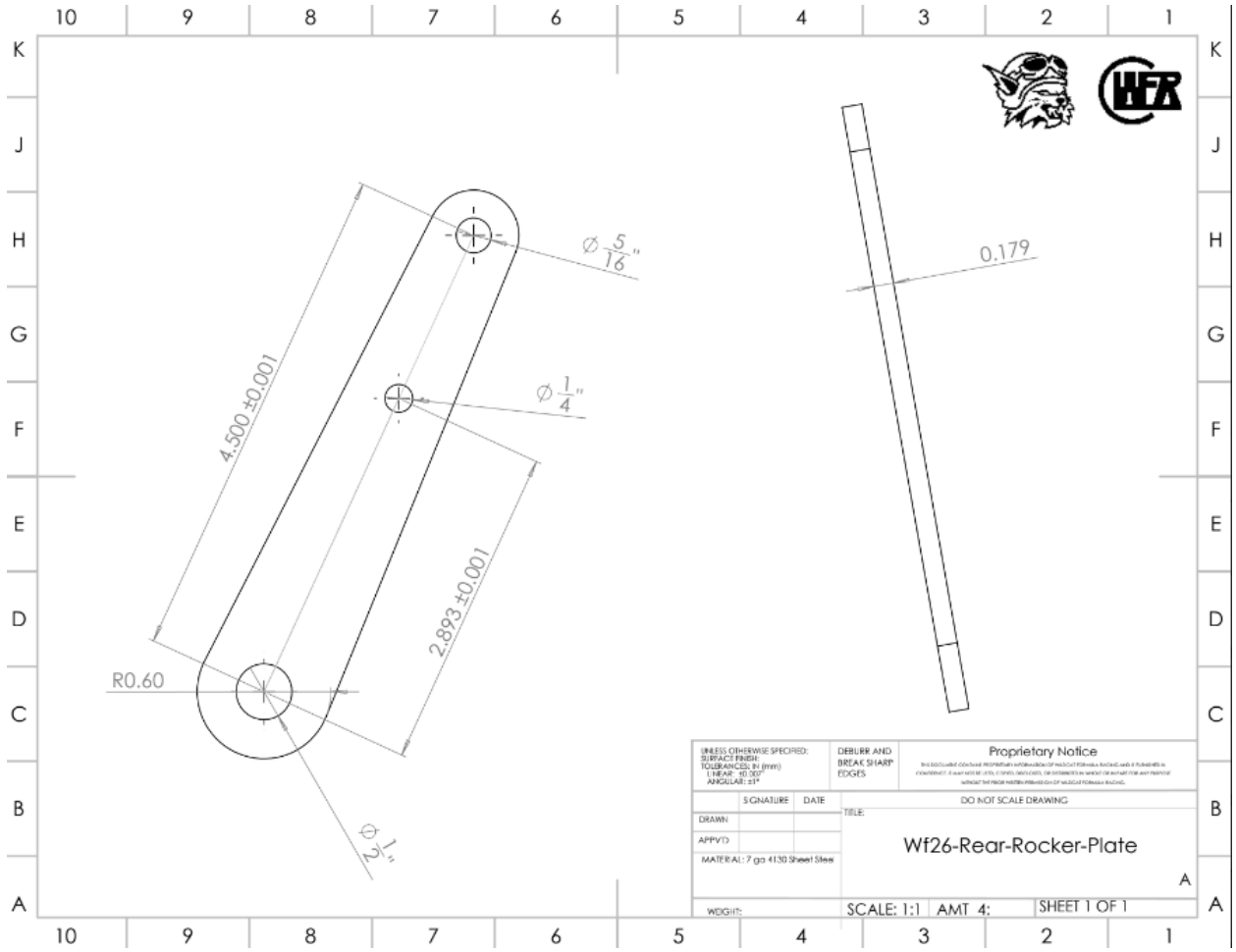

Rear Lower Control Arm 1

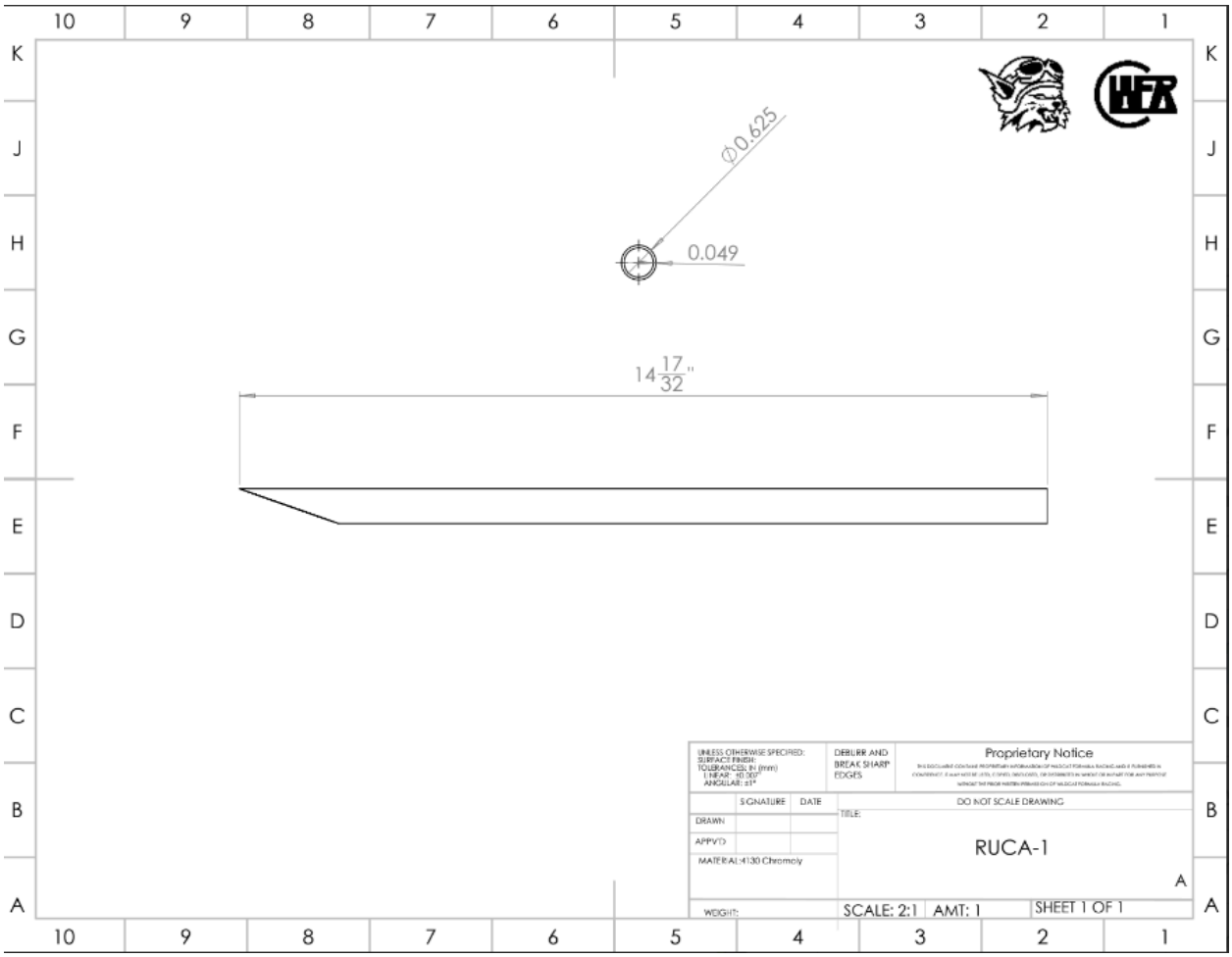

(name on drawing is incorrect, should be RLCA-1)

Rear Lower Control Arm 2

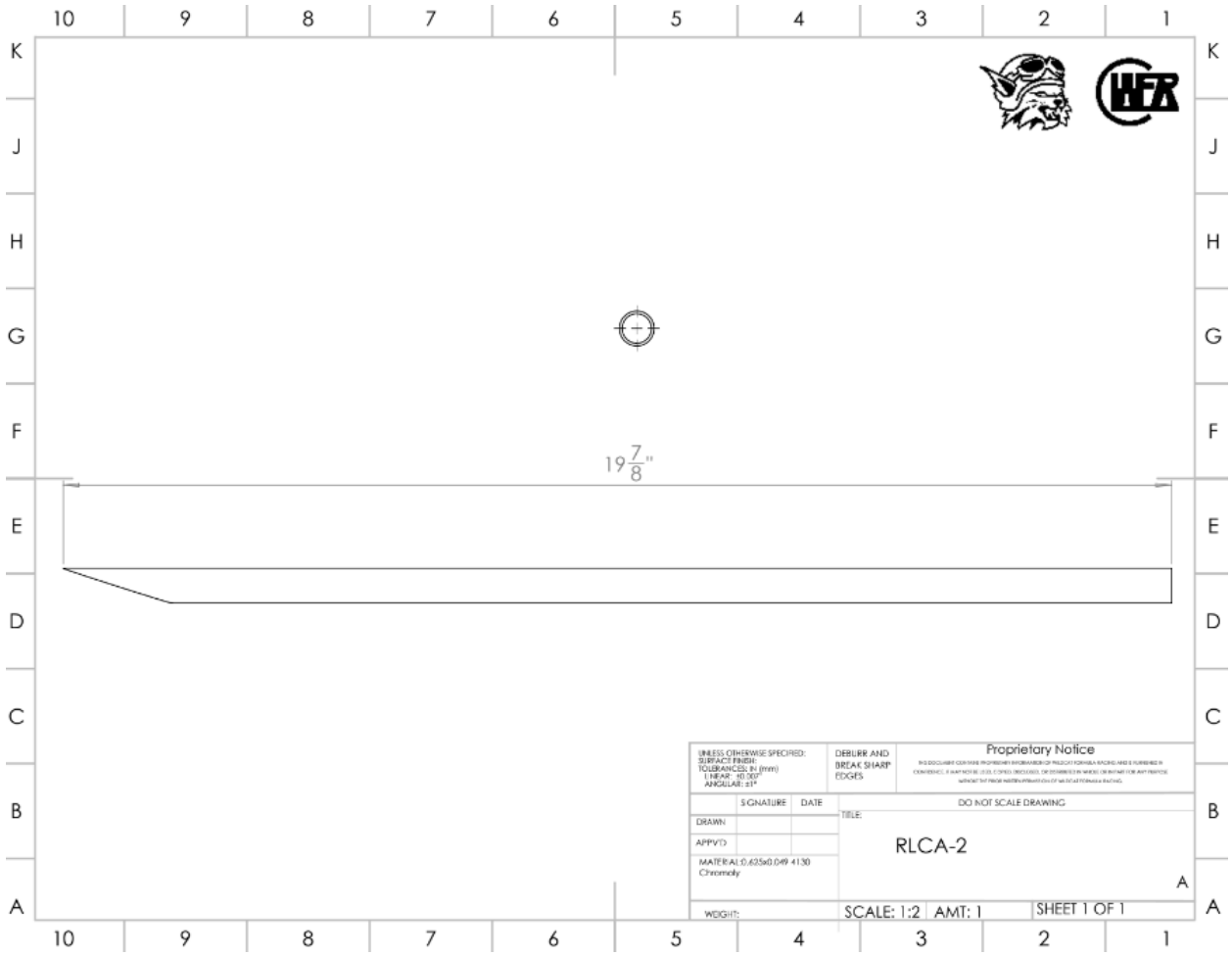

Rear Lower Control Arm

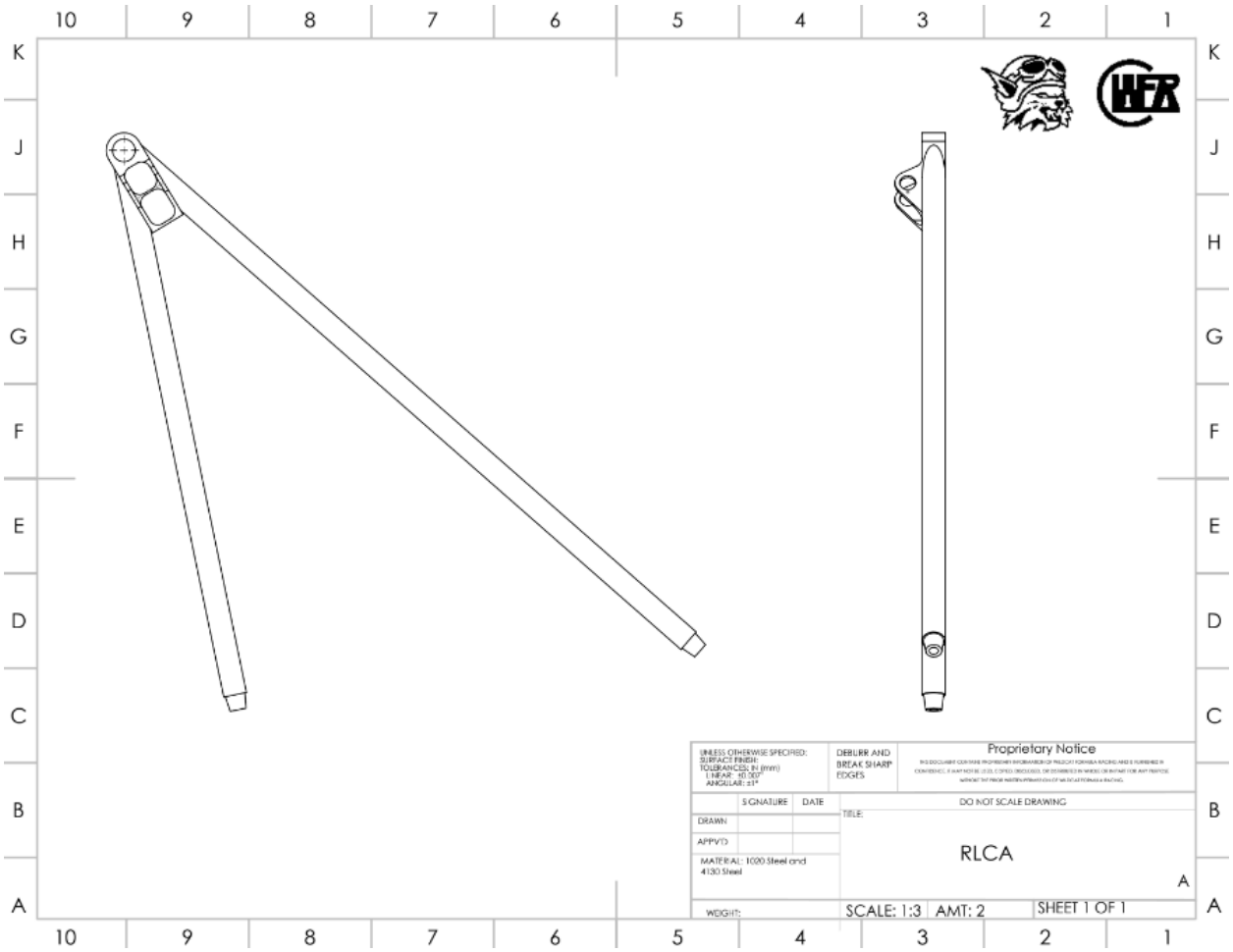

Title: WF-26 Suspension Subsystem Request For Quote Date: 4/27/26

Rear Upper Control Arm 1

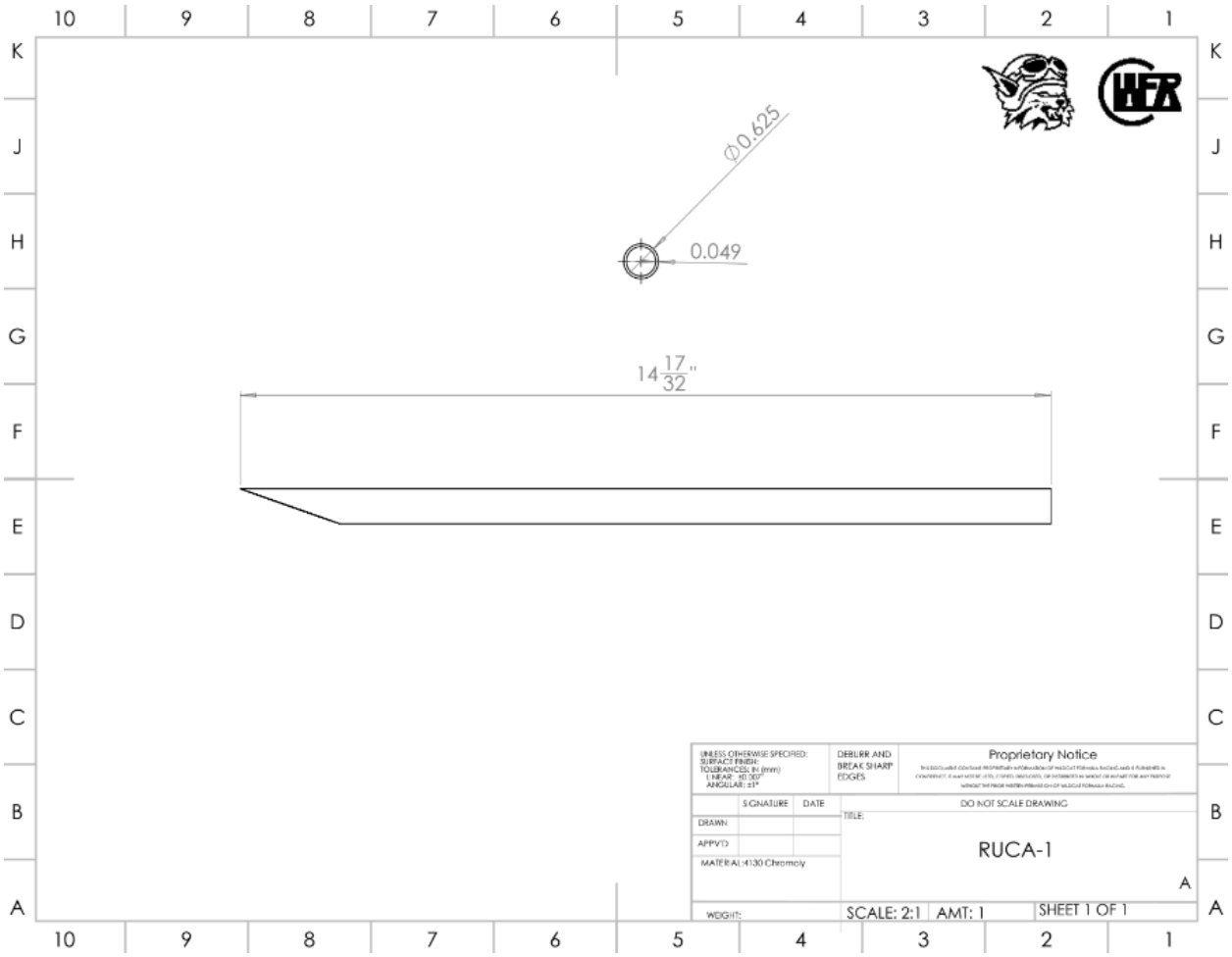

Rear Upper Control Arm 2

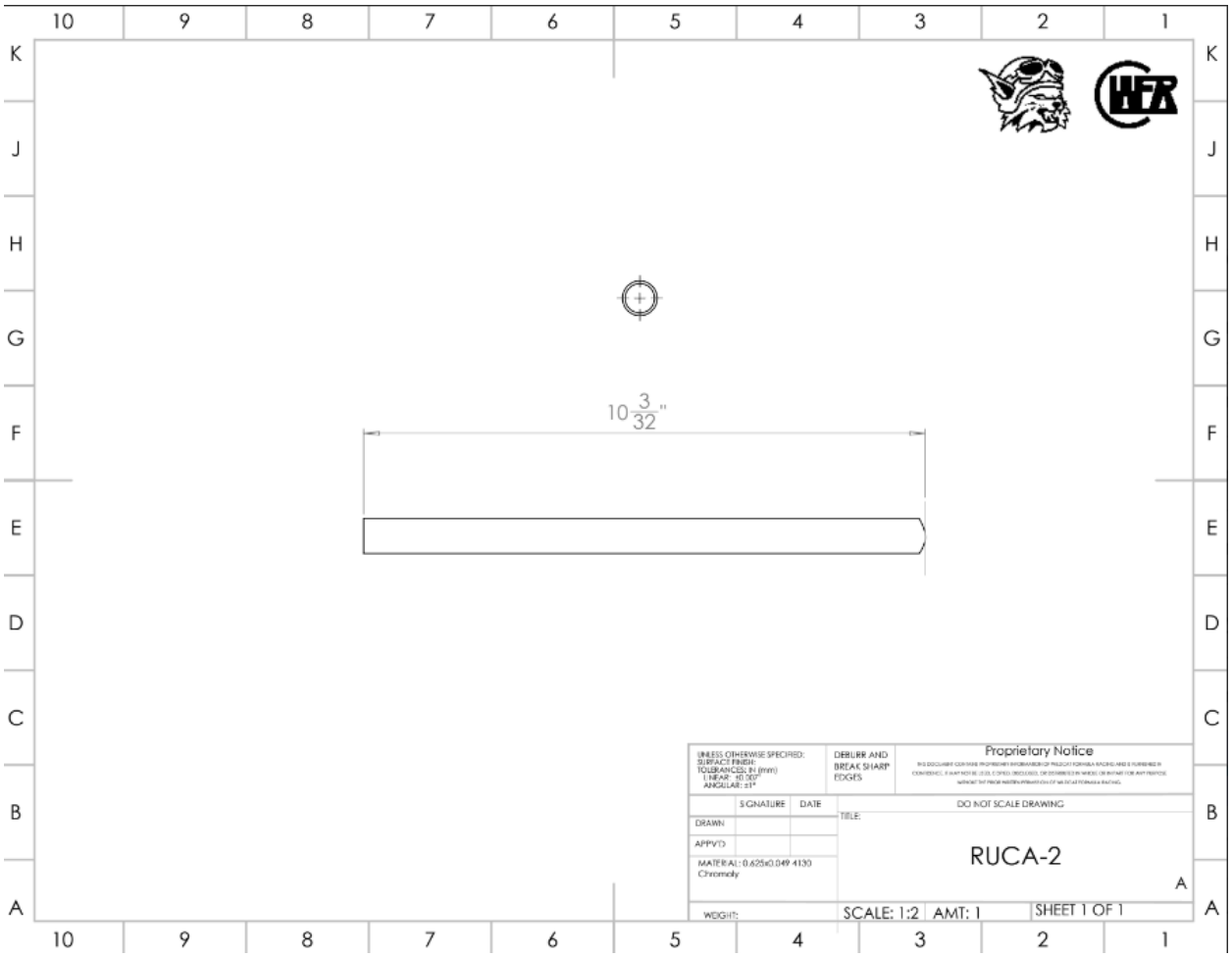

Rear Upper Control Arm Tie Rod Tab

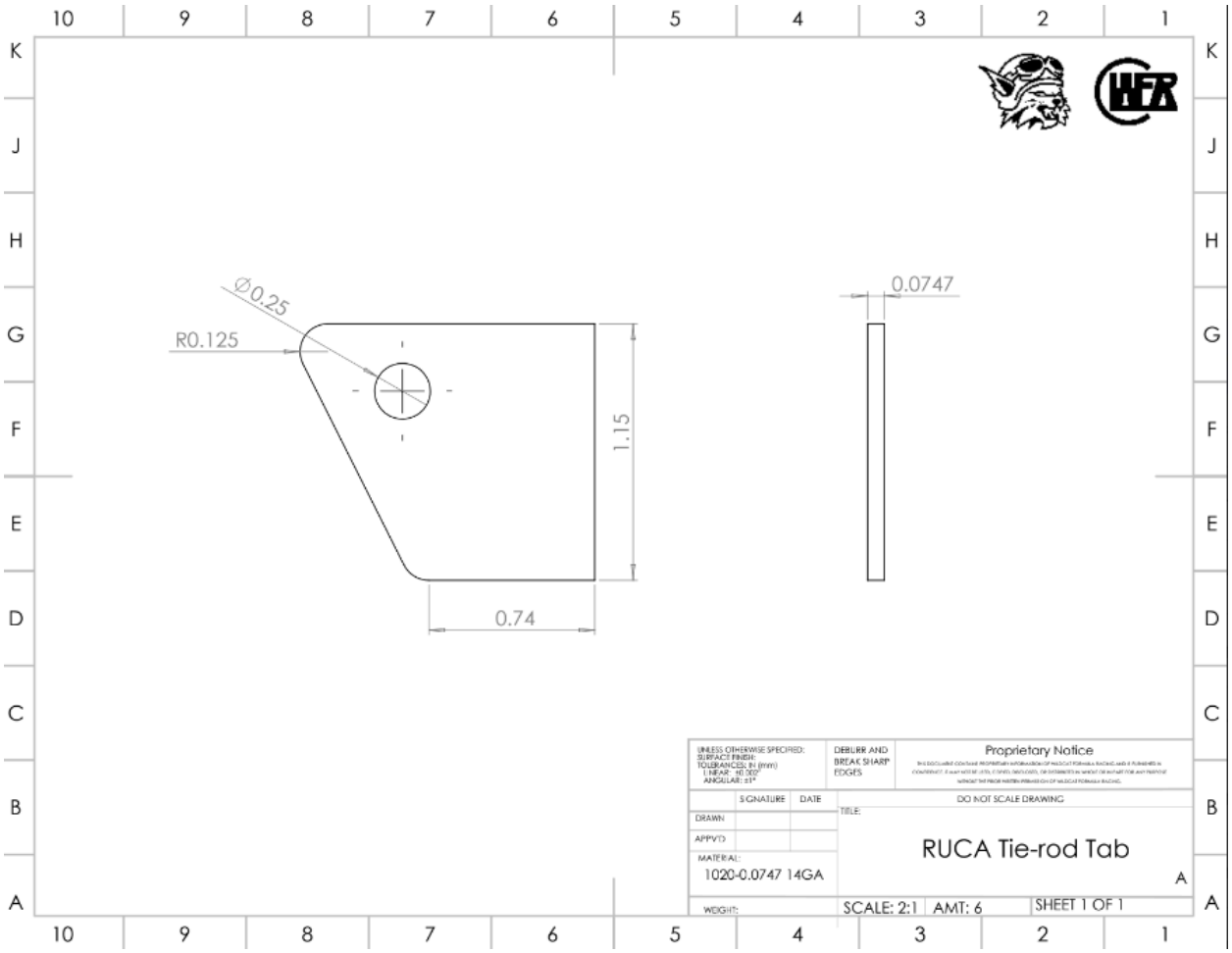

Steel Canonical Spacer

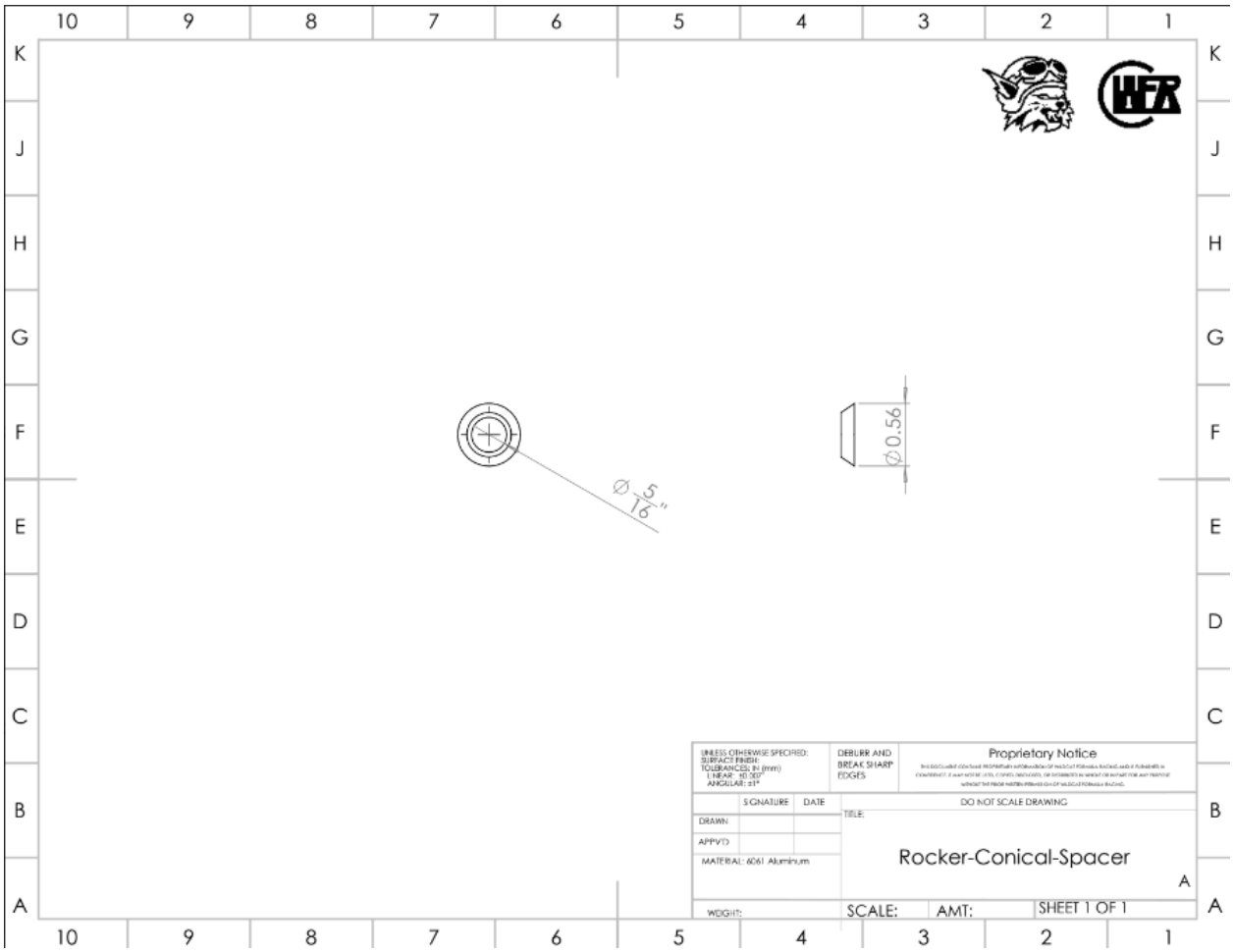

Steel Pushrod Spacer

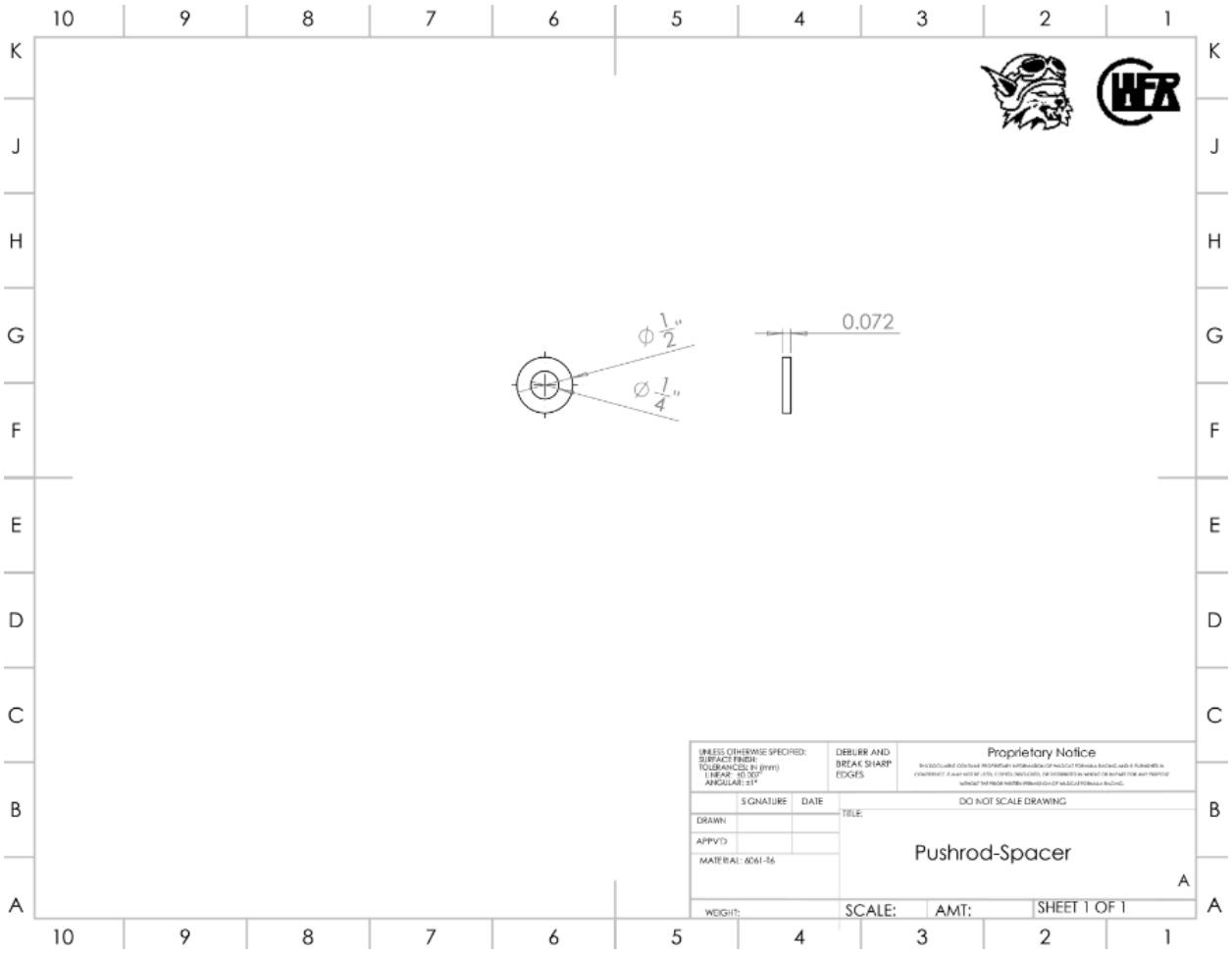

Steel Rocker Spacer

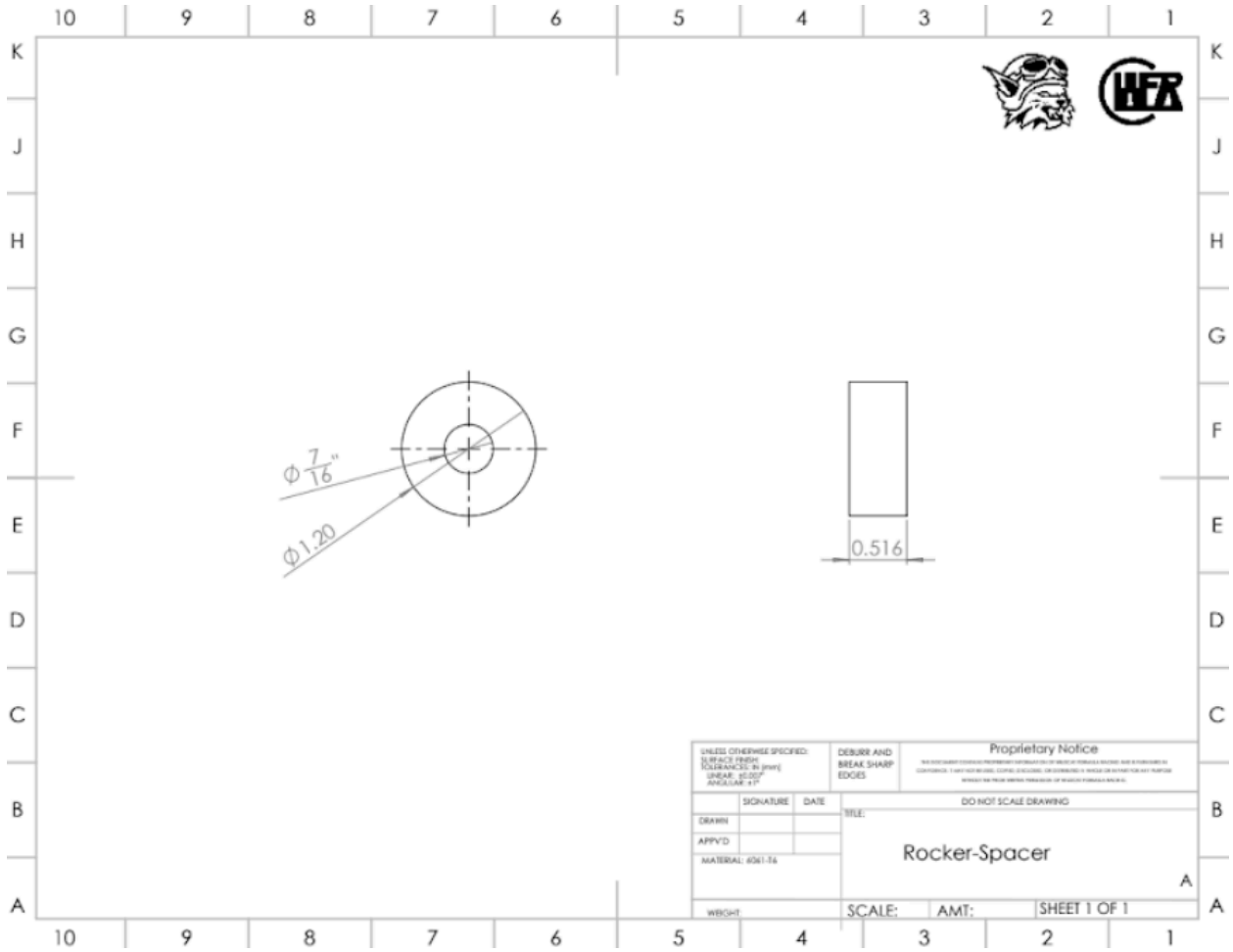

Title: WF-26 Suspension Subsystem Request For Quote Date: 4/27/26

Front Rocker Assembly

BOM Table

	PART NUMBER	DESCRIPTION	QTY.
1	Front-Rocker-Experiment		1
2	WF26_Rocker_Spacer		1
3	Coilover_Conical		2
4	92510A760	Aluminum Unthreaded Spacer	4
5	94622A415	Cadmium-Plated Steel Hex Head Screw	2
6	94945A139	High-Strength Steel Thin Nylon-Insert Locknut	2
7	an5-16_ 5-16 1.31 GRIP		1
8	94945A119	High-Strength Steel Thin Nylon-Insert Locknut	2
9	an5-16_ 5-16 0.94 GRIP		1
10	98023A116	Zinc Yellow-Chromate Plated Grade 8 Steel Washer	2
11	FK JMX4 Ball		2
12	60645K121	Ball Joint Rod End	2
13	5905K583	Needle-Roller Bearing	2
14	5909K24	Needle-Roller Thrust Bearing	2
15	5909K241	0.032" Thick Washer for 5/16" Shaft Diameter Needle-Roller Thrust Bearing	4

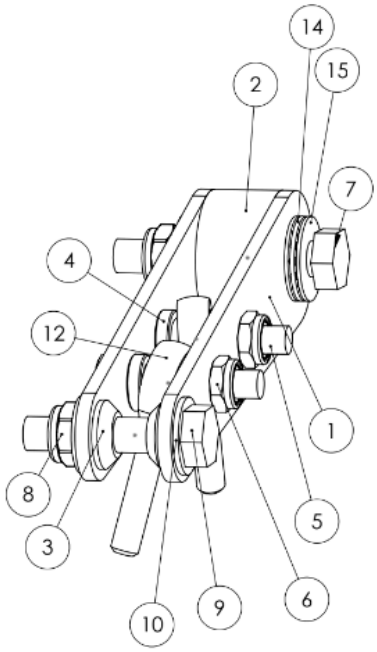

PROPERTY OF WILDCAT FORMULA RACING 2025-2026

TITLE: Front Rocker Assembly

DRAWN BY: JF

DATE: 3/26/2026

PN: WFR - 26 A

ALL DIMENTIONS IN INCHES UNLESS OTHERWISE SPECIFIED | SCALE: 1:20 | SHEET 1 OF 1

SOLIDWORKS Educational Product. For Instructional Use Only.

Lower Bearing Cups

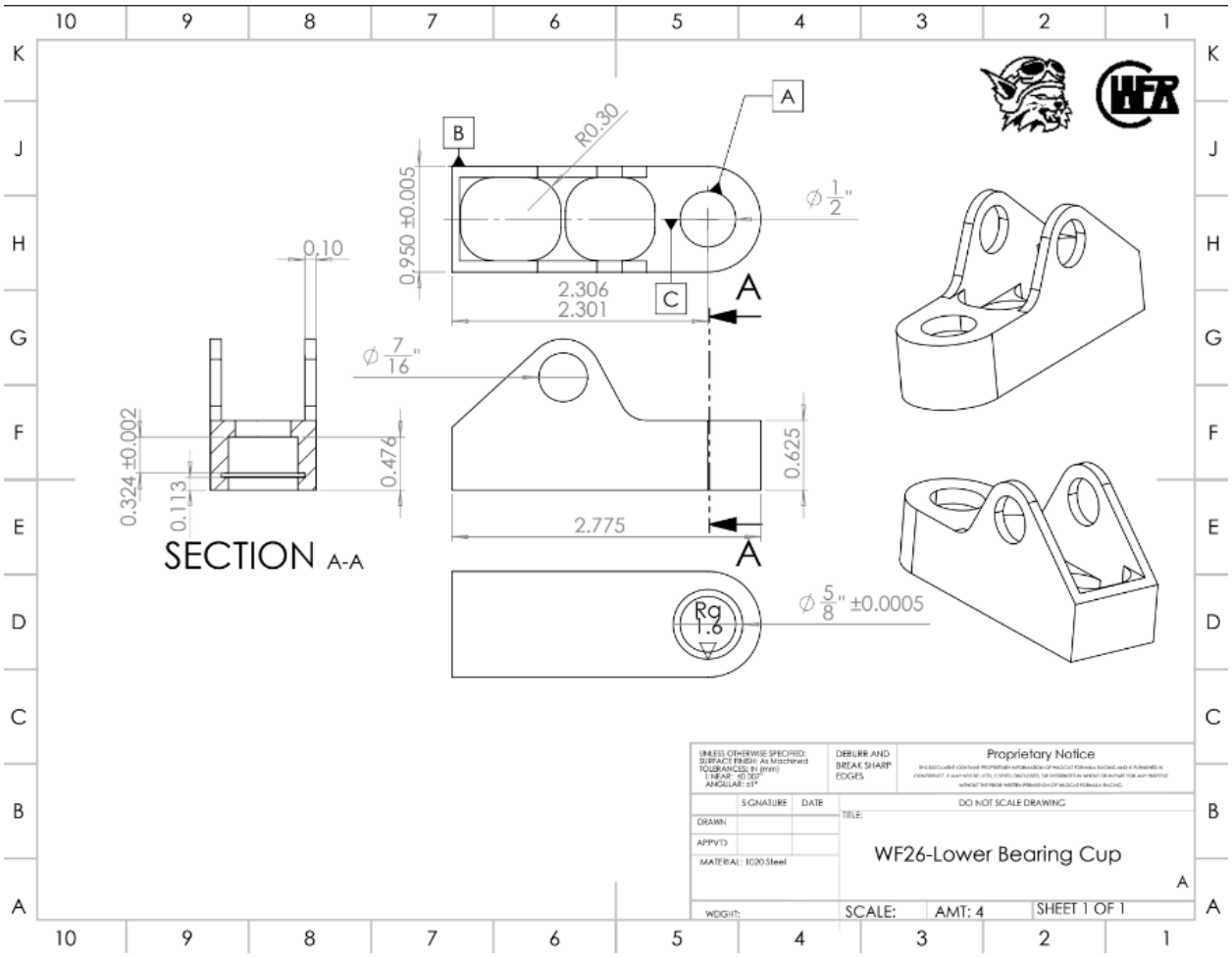

Title: WF-26 Suspension Subsystem Request For Quote Date: 4/27/26

Node Top Down Spacers

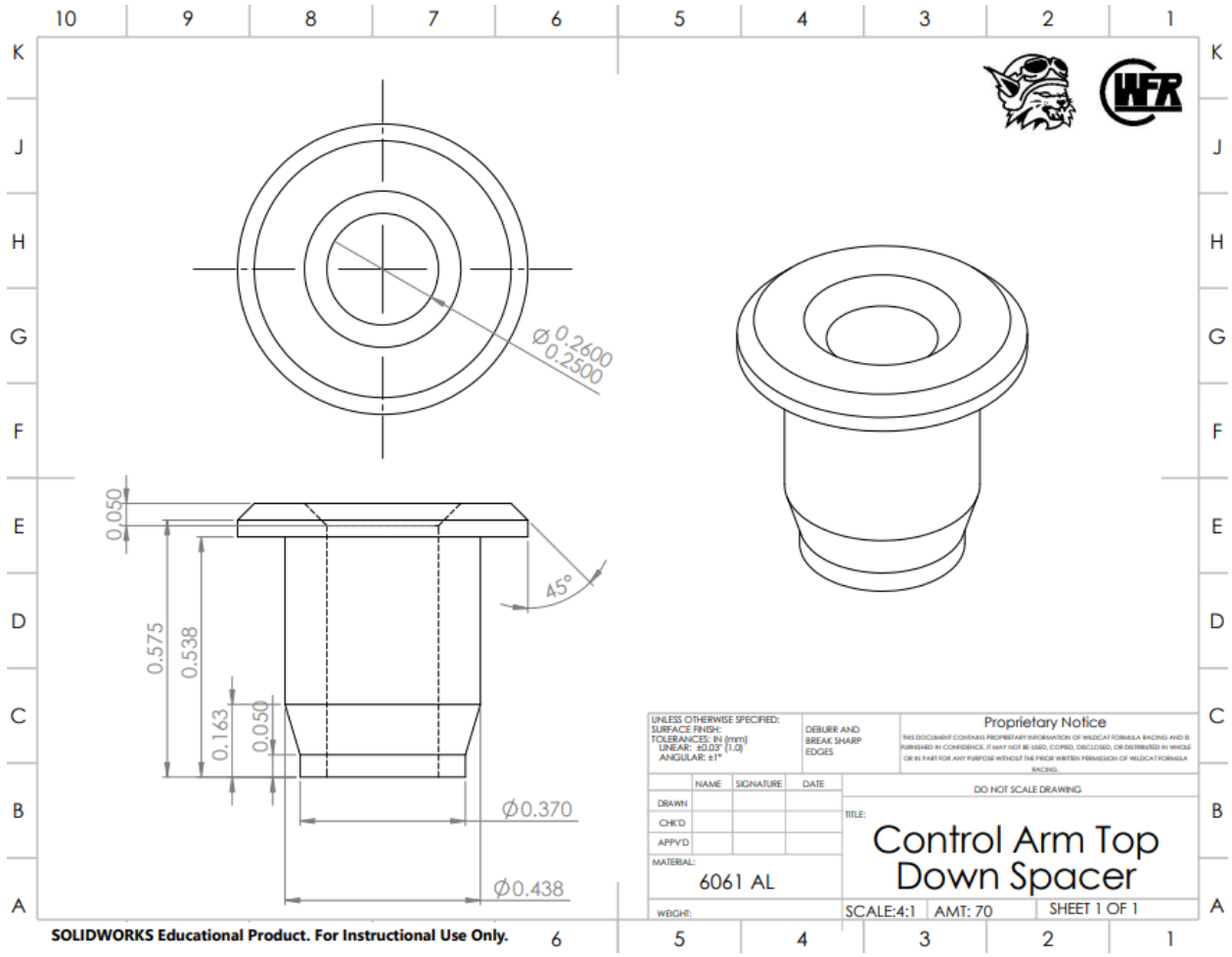

Title: WF-26 Suspension Subsystem Request For Quote Date: 4/27/26
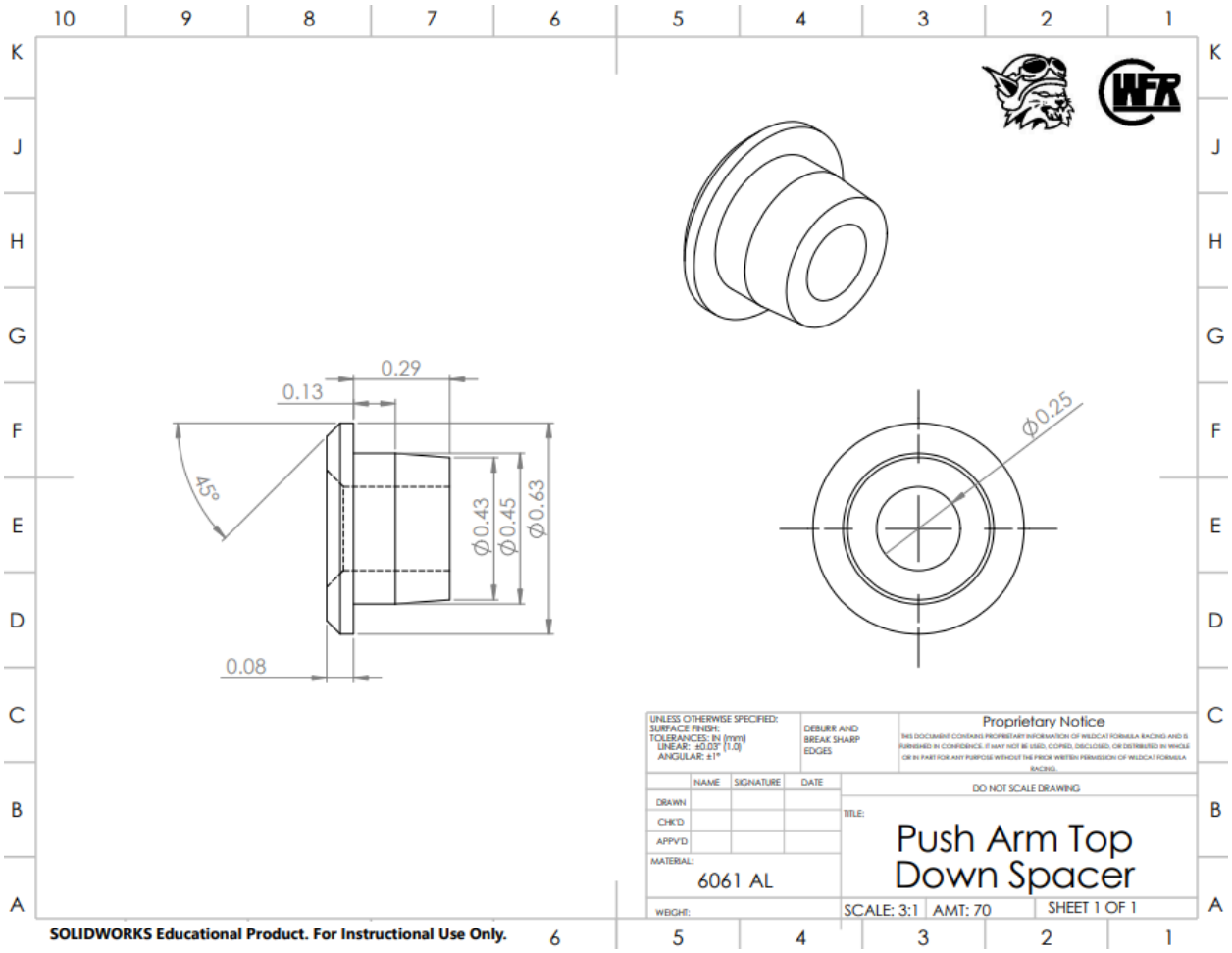
Push Top Down Spacers