LiMonitor G1

Near-Electric Operation Safety Monitoring System

Quick Manual

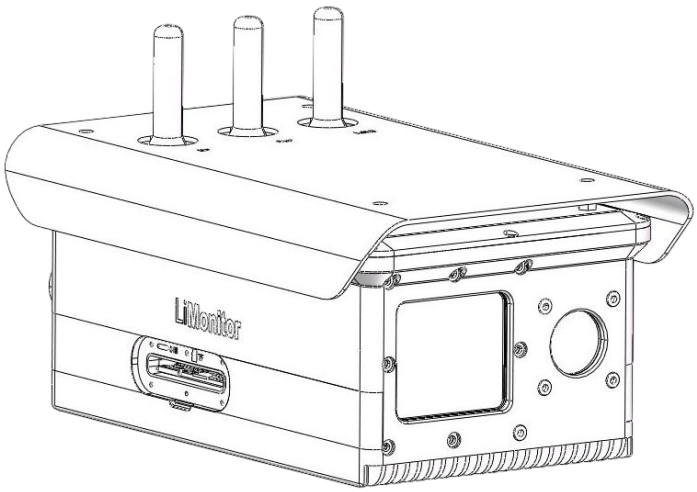

Table of Contents

LiMonitor G1 1
Product List 4
Product Structure 5
Specifications & Parameters 6
Operations Process 7
- Software Installation 7
- Device Setup 7
- Monitoring Preparation 8
- Real-time Monitoring 8

System Features 9

Product List



LiMonitor G1 ×1



Megaphone ×1



Flight Case ×1



Power Adapter ×1



Pan-tilt ×1



Tripod ×1



(Optional Accessory)
Tablet PC × 1
Tablet Charger x 1



(Optional Accessory)
Battery Box × 1
Power Cord x 1



(Optional Accessory)
Battery × 2
Battery Charger x 1

Note: The final product list shall be subject to the delivered goods.

©2026 Map The World In 3D

Product Structure

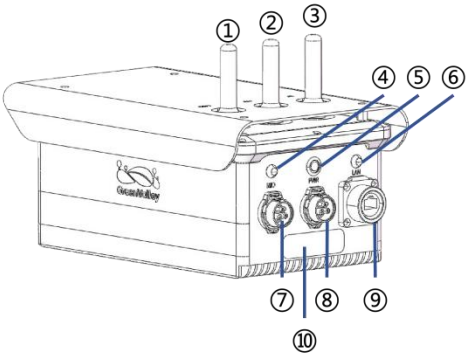

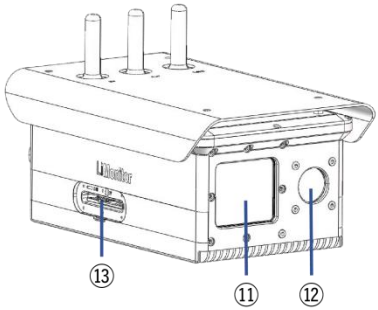

No.	Interface	Description
1	WIFI antenna	Industrial-grade Gigabit Wi-Fi 6 network
2	433 antenna	433 wireless communication
3	4G antenna	4G communication,Supports global roaming
4	Sensor light	Green: Normal; Red: Sensor abnormal
5	Power light	Green: Normal; Red: Voltage abnormal
	Switch button	Long press: Power off; Single click: Power on
6	System light	Green: Normal; Red: System operation abnormal
7	Horn	Wired horn interface
	Serial port	RS485 serial communication interface
8	Power supply	Power interface, DC power supply (10.4-19V)
9	Network port	Gigabit Ethernet port
10	Device SN	Device SN number, unique device identifier
11	LiDAR	LiDAR sensor
12	Camera	Visible light camera sensor
13	4G	SIM card slot, Supports global roaming
	TF	TF card slot
	Type-C	Equipment debugging interface

Specifications & Parameters

System Parameters

Main Unit Weight	3.16kg	Main Unit Size	276×163×164mm
Communication Mode	WIFI / LAN	Protection Grade	IP66
Main Unit Storage	512G SSD	Input Voltage	10.4-19 V DC
Power Consumption	25W (Typical)	Operating Temperature	-20~50℃
Monitoring Distance	120m	Monitoring Accuracy	±10cm
Working Mode	Real-time Mode	Power Supply Mode	Adapter / Portable Battery
Voice Alarm	Megaphone	Voice Response Time	< 0.5S
Video Alarm	Alarm information & real-time video	Video Response Time	< 1.0S

LiDAR

Scan Point Frequency	240000 points/s	Field of View	70.4°(H.)×77.2°(Vert)
Detection Range	450m@80% reflectivity	Scanning Frequency	10Hz

Camera

Pixel	8 Million Pixels	Field of View	87.5°(H.)×44.4°(Vert)
Resolution	3840*2160，1920*1080	Frame Rate	10FPS

Software

Display & Control Software	B/S Architecture Server	Operation Mode	Local Operation

 ©2026 Map The World In 3D

Operations Process

This product is standardly equipped with a tripod for mobile installation, enabling rapid deployment at operation sites. The installation procedures are as follows:

<table>
<tr>
<td>Software Installation</td>
<td>
① Software Installation. Download LiMonitor Server software and install it following the prompts. Select a disk with sufficient storage space for deployment.
② Software Login. Default account: administrator Default password: 123456789
③ Device Addition. Go to the Device Management tab, click Add Device, then fill in the device serial number and associated circuit.
④ Software Upgrade. Click Upgrade when version update prompts pop up. An available internet connection is required for this operation.
⑤ Device Connection. Power on the device, connect your computer to it via Wi-Fi or LAN, and set the network IP address to: 192.168.1.13
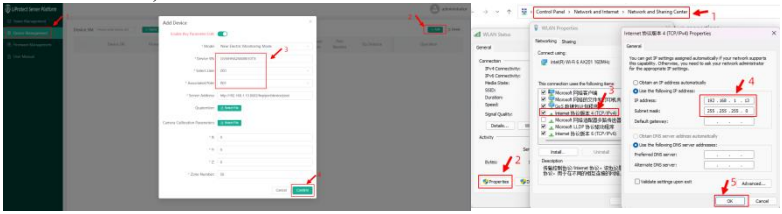
Note: This operation guide is for computers without the software installed. Skip this part if the software is already installed or a tablet is adopted.
</td>
</tr>
<tr>
<td>Device Setup</td>
<td>
① Assemble the device. Align the base adapter of the main unit with the pan-tilt holder, then fasten the buckles tightly to prevent loosening.
② Set up placement. Select a proper site according to on-site conditions, place the device and adjust the tripod height for optimal viewing vision.


③ Power on the device. Power it via adapter or portable battery; click and hold the battery switch to turn on. Three indicator lights turn green after power-on.
④ Connect the device. Connect via device Wi-Fi or LAN cable. Note the fixed IP address: 192.168.1.13.
⑤ Adjust posture and angle. After successful connection and normal data feedback, adjust the device position or main unit angle to get ideal viewing effect.
</td>
</tr>
</table>

Monitoring Preparation	① **Data Request.** Enter the device monitoring page and click **Initialize** to obtain real-time data, then return to select the image window. ② **Target Selection.** Select or frame **live-powered targets** such as power lines as monitoring targets as needed, then click Done to save. ③ **Electronic Fence.** Set up electronic fences or intrusion target detection if required, and click **Save Settings** upon completion. ④ **Parameter Adjustment.** Adjust the alarm distance corresponding to voltage levels on the **parameter setting page** according to actual site conditions. ⑤ **Voice Alarm.** Set the intercom channel number in parameter settings and match the channel on the intercom device accordingly. 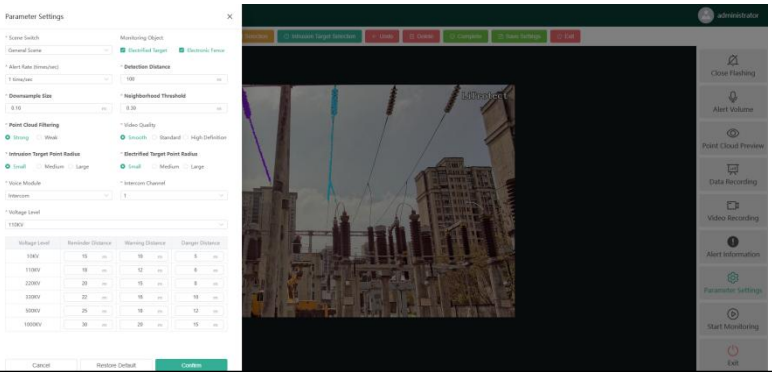
Real-time Monitoring	① **Parameter Adjustment.** Adjust parameters if mismatched during monitoring and save to take effect. ② **Position Adjustment.** Readjust the device position when the installation angle is improper, then re-initialize after adjustment. ③ **Real-time Monitoring.** The monitoring page displays on-site operations via real-time video and shows alarm messages. ④ **Voice Alarm.** Danger alerts are simultaneously broadcast via intercom. 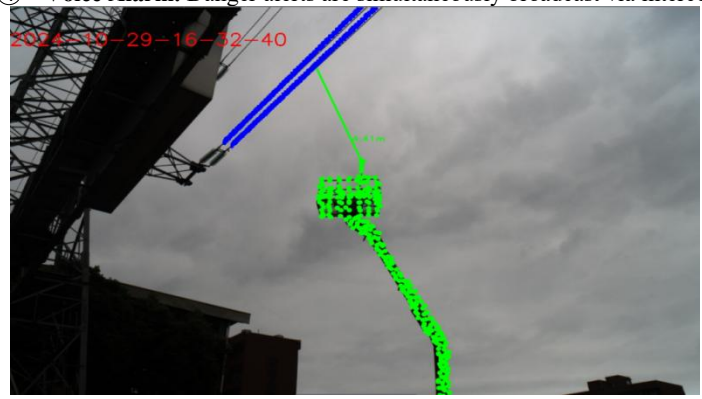 ⑤ **Auxiliary Functions.** The software supports PC audio alarm, screen flashing alert, point cloud preview, video recording and historical alarm query.

System Features

LiMonitor G1 is an anti-external damage system designed for near-electric operations, focusing on safety monitoring, identification and early warning. Integrated with LiDAR and cameras, it supports edge computing and Wi-Fi/LAN communication. Combined with **LiMonitor Server** platform, it forms a closed-loop protection system of **real-time perception**, **intelligent analysis** and **rapid early warning**, reducing external intrusion risks and ensuring stable operation of power facilities.

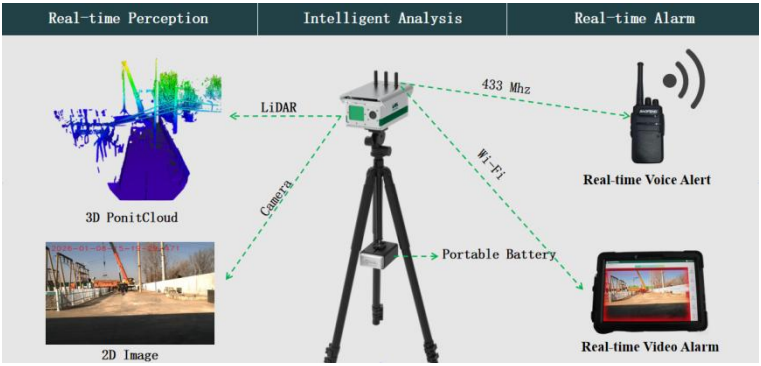

The system functions and features are as follows:

No.	Functions	Description
1	**Real-time Perception**	Integrated with LiDAR and high-definition cameras, it senses the on-site operating environment at a high frequency of 10Hz, and outputs real-time point cloud data and images synchronously.
2	**Intelligent Analysis**	Equipped with high-performance AI processor, it integrates precise laser ranging, multi-target identification and tracking, and efficient point cloud AI algorithms to realize intelligent judgment and analysis.
3	**Multi-mode Communication**	Adopts industrial-grade Wi-Fi 6 and 433MHz wireless communication, and is compatible with LAN wired communication to ensure stable and real-time data transmission.
4	**Voice Alarm**	Supports linked voice alarm via wireless intercom, which can timely send hazard early warnings to operators and improve emergency response efficiency.
5	**Real-time Video**	Supports real-time high-definition video transmission, enabling intuitive visual display of dangerous scenarios to help staff quickly identify risk sources.
6	**Portable Power Supply**	Adopts portable battery power supply with simple installation and operation, perfectly solving power supply problems in outdoor areas without municipal power supply.
7	**Rapid Deployment**	Compatible with mobile tripod mounting, enabling fast equipment setup and site relocation.
8	**Precise Ranging**	Features high ranging accuracy with detection distance error less than 10cm, meeting high-precision monitoring requirements.



If you have any questions or suggestions about the manual, please contact us through the following methods:
E-mail: info@greenvalleyintl.com
Address: 729 Heinz Avenue, Suite 9, Berkeley, California 94710, USA

Map The World In 3D
www.greenvalleyintl.com