LiGrip O2 Vehicle-mounted Kit User Manual

1.Vehicle-mounted Kit Components

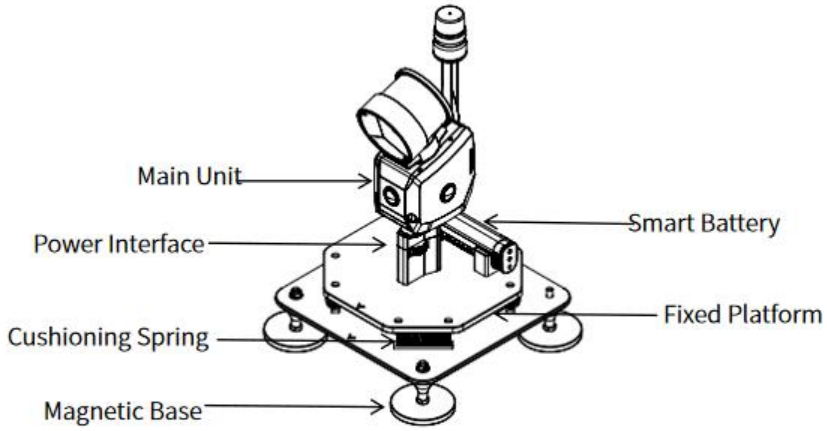

*The Vehicle-mounted Kit is an integrated design requiring no additional assembly; only the main unit and smart battery need to be installed during use.
* The Vehicle-mounted Kit employs magnetic mounting; please use only with vehicles compatible with magnetic attachment.
*The car kit includes a safety rope, which can be used to assist special vehicles.

2.Data Collection and Precautions

Data collection operations can be controlled via the GreenValley APP; please refer to the product user manual for the collection procedure.



Collection Examples

Additional Precautions

① When creating a collection project, select vehicle-mounted mode for the device configuration;

② Before starting data collection, wait for the device to complete initialization, then start the vehicle;

③ It is recommended to keep vehicle speed below 40 km/h during data collection to prevent degradation of point cloud density and quality;

④ If GNSS processing is required, configure RTK or establish a base station before commencing data collection.

3.Vehicle-mounted Kit Installation

3.1.Clean the vehicle hood

It is recommended to install the Vehicle-mounted Kit on the hood panel in front of the front passenger seat or on the rear hood panel. Before installation, clean both the hood panel and the magnetic base to prevent interference with magnetic adhesion, which could result in insecure mounting.



3.2.Install the Vehicle-mounted Kit

The Vehicle-mounted Kit uses a magnetic base for direct attachment. Ensure the arrow faces the device's forward direction.



Install the magnetic base



Ensure correct base orientation

3.3.Install the main unit device

Host device installation consists of four steps:

① Loosen the fixing knob; ② Open the device locking handle; ③ Slide the host device along the power interface;

④ Close the locking handle and tighten the fixing knob.



① Loosen the fixing knob



② Open the device locking handle



③ Slide the host device along the power interface



④ Close the locking handle and tighten the fixing knob

3.4.Install the handle battery

Ensure correct battery orientation. Slide the smart battery completely into the interface to complete kit installation.



Slide in the battery



Installation completion diagram

4.Vehicle-mounted kit disassembly

The disassembly and installation of the Vehicle-mounted Kit follow the reverse procedure and can be divided into four steps:

① Remove the smart battery; ② Release the device fixation; ③ Detach the main unit; ④ Disassemble the Vehicle-mounted Kit.



① Firmly grasp the battery and slide it upward to remove the handle battery.



② Release the device fixation by opening the device locking handle and loosening the fixing knob.



③ Press the anti-drop button and slide out the main unit while holding it.



④ Apply force to lift and remove the Vehicle-mounted Kit upward.

GreenValley