mti
METALWORKING TOOL INDUSTRY

Custom Tools for Customers

Who Take Their Work Seriously

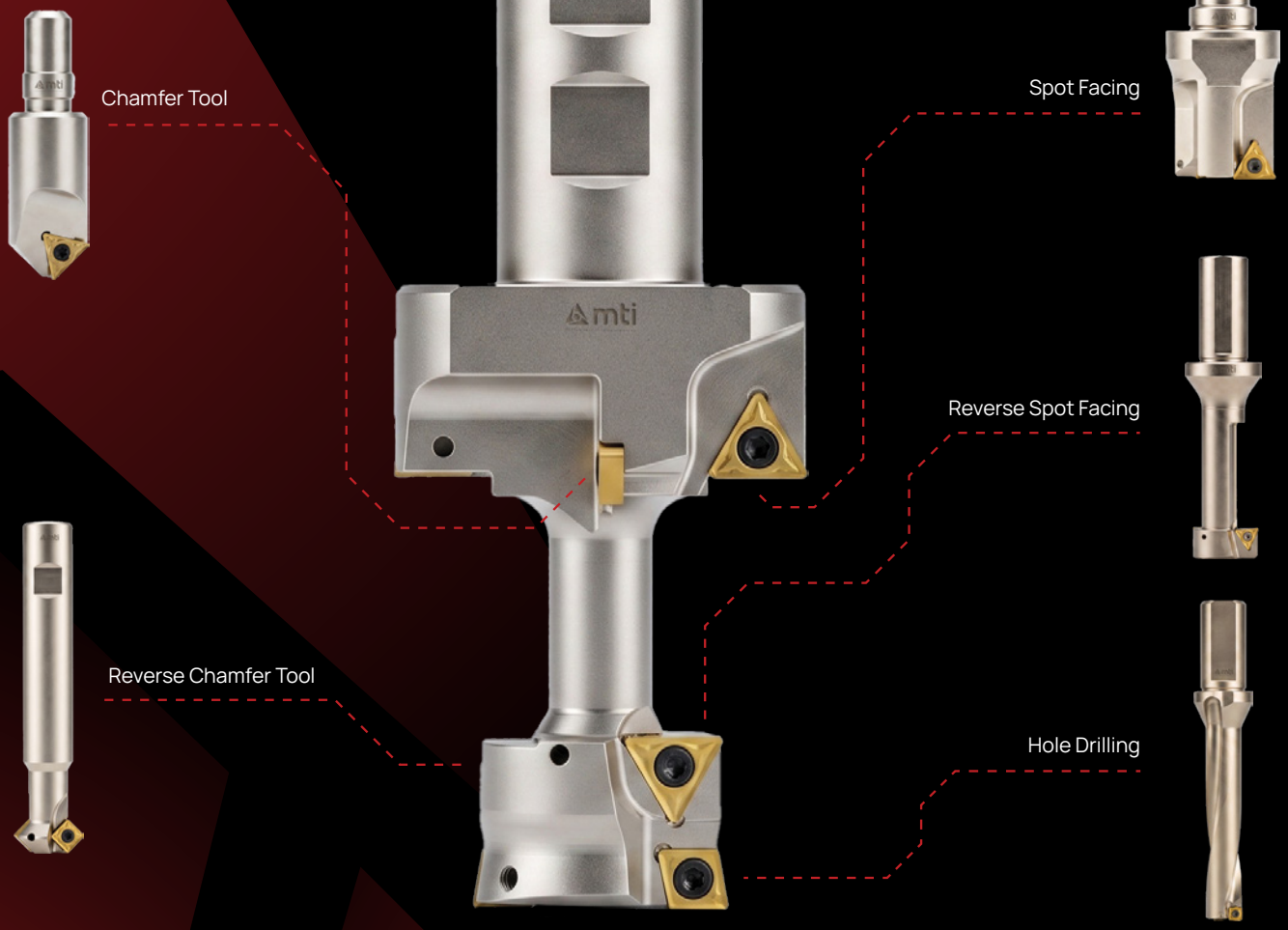

mti-tools.com

"A product that is six months late to market loses one-third of its lifetime profit."

McKinsey & Company

MTI Tools is a manufacturer of indexable steel body tools that is aware of these losses and works towards two main goals:

1 - The Shortest Lead Time in the Industry

To accelerate customers' transition to production by delivering custom tools with the industry's shortest lead time.

2 - Reduced Machining Time

To advance the product's delivery to the end user by reducing part machining times through custom tool design.

About mti

In CNC machining, not every part can be machined most efficiently with a standard tool; some parts require multiple tools, tool changes, and operations.

MTI Tools steps in exactly at this point.
It analyzes how many operations and how the customer machines their parts, offering custom tool solutions that will reduce the number of operations and machining time.

It creates the entire design of these tools, from body geometry to insert pockets, according to the requirements of the machining operation.

~4,3
WEEKS
AVERAGE
LEAD TIME

%99,1
REPEAT
ORDER RATE

25+
YEARS
CUSTOM TOOL
PRODUCTION EXP.

You Choose the Insert. We Build the Tool.

As MTI Tools, we manufacture our steel body tools according to the cutting inserts suitable for you. Whether it is for your existing cutting inserts waiting to be used on the shelf or for the new cutting inserts you will start using...

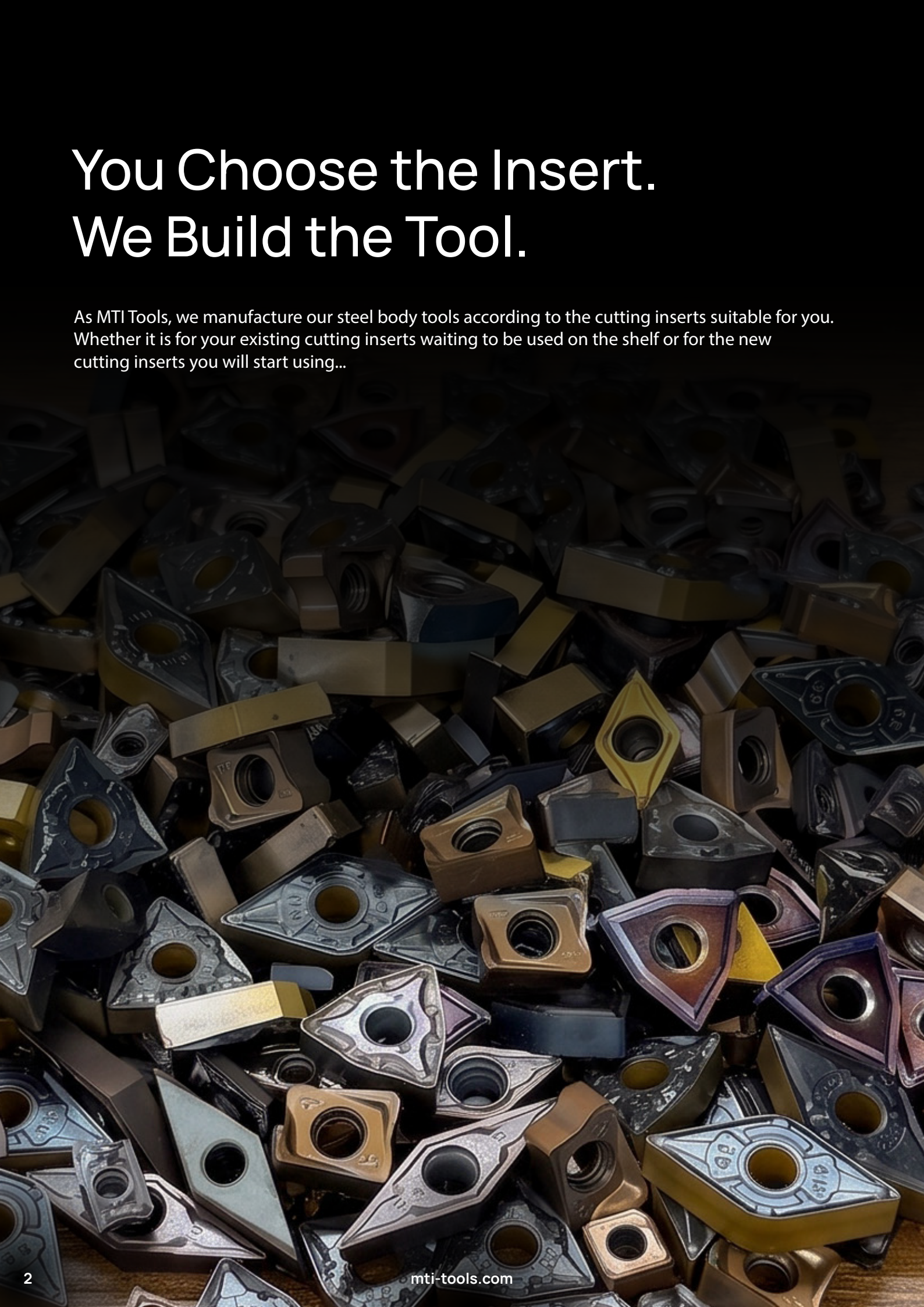

Standard Tools

In the industry, the priority in selecting standard tools is often cost; however, the savings made from a steel body tool reflect on machining quality and tool life. MTI Tools establishes this balance in favor of quality.

Our standard tools are manufactured from the same steel, on the same machines, and with the same care as our custom tools. For MTI Tools, a standard tool is a custom tool produced in high volumes. The same precision, the same quality control, the same care...



Custom Tools

Not every part can be machined efficiently with a standard tool. Multiple tools are used on the same part, tool changes extend cycle time, or the part requires a special groove, profile, or tolerance; at this point, the solution is a custom tool.

MTI Tools examines the process and manufactures tools whose geometry is designed according to the part, combining multiple operations in a single tool.

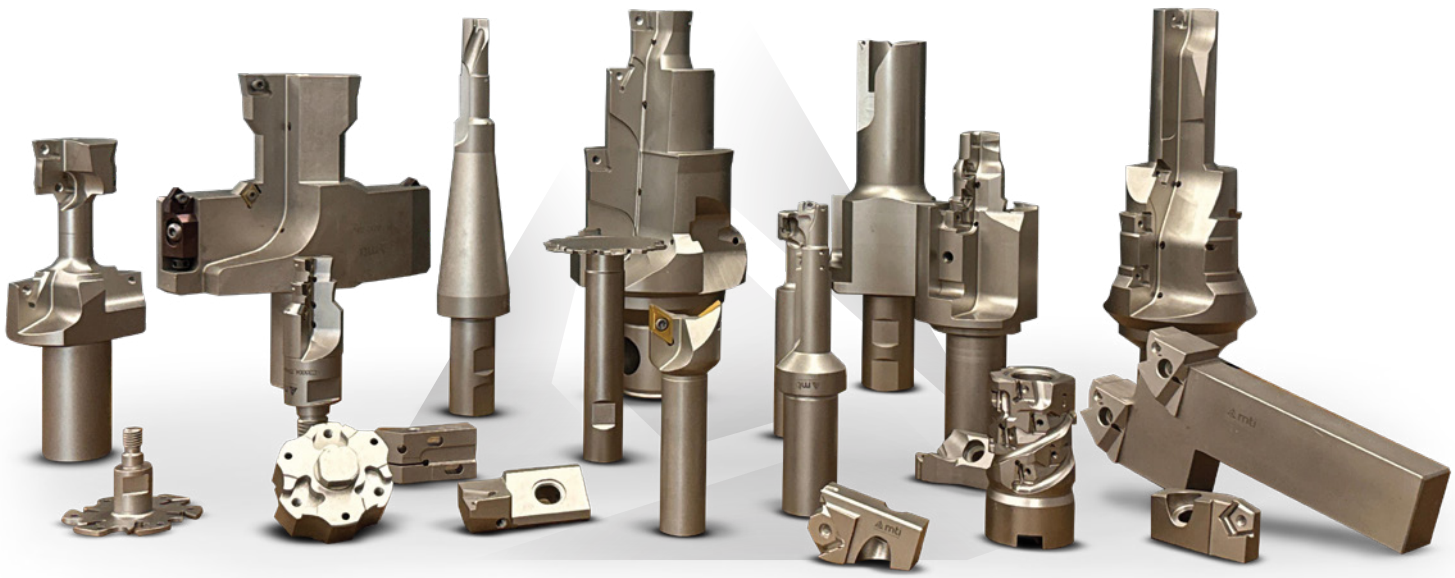

Why Custom Tools?

In CNC machining processes, every part may not be machined most efficiently with a standard tool.

The main purpose of MTI Tools' custom tool solutions is to combine multiple CNC operations on a single tool in appropriate applications.

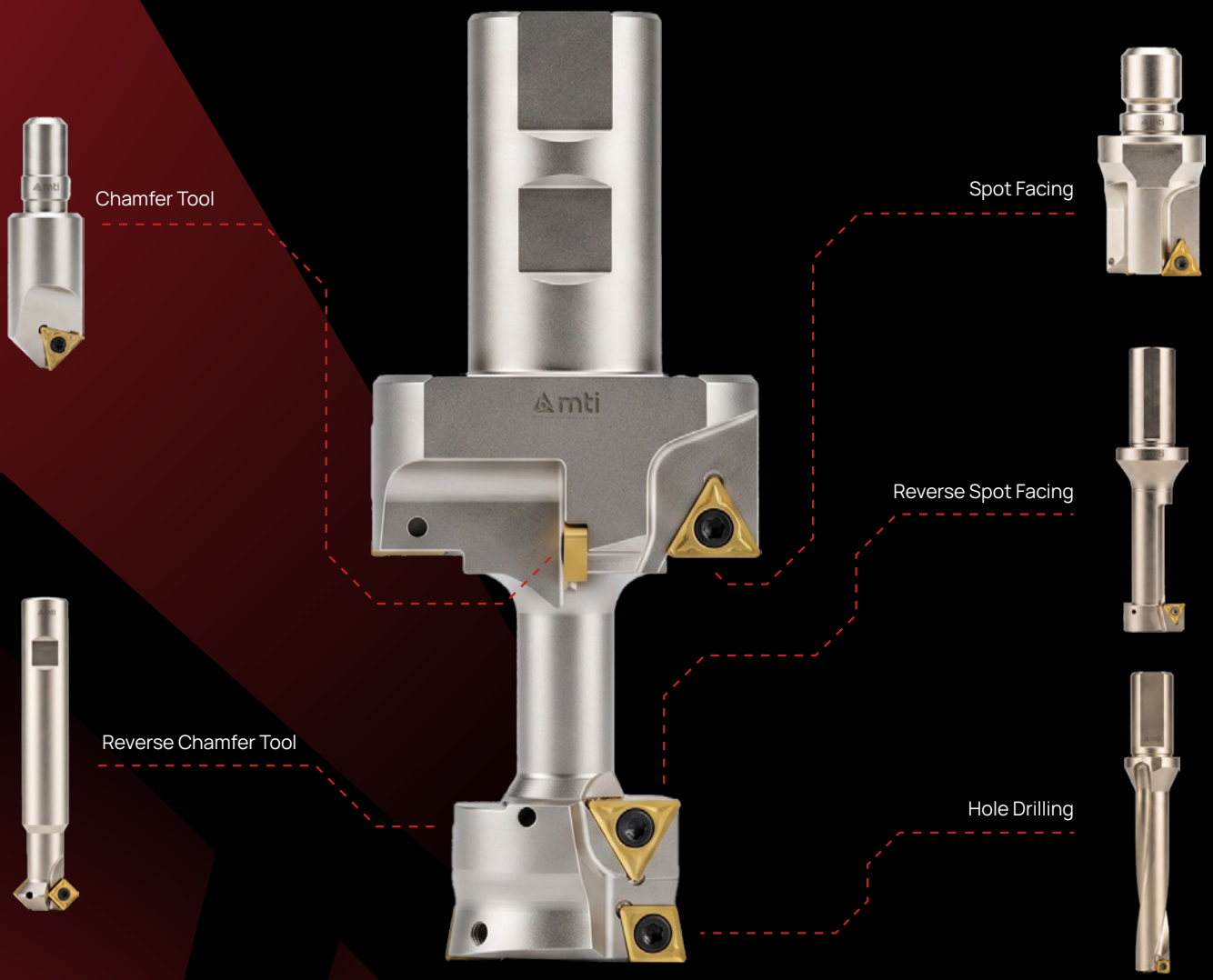



Stepped Boring & Boring



Indexable Circular Saw



Shank Slot Milling



Combined Finish Boring



Threading + Chamfering



Diameter Completion + Bearing Seat + Chamfer + Seal Seat Tool



Twin Grooving Toolholder



Bi-directional Turning



Face Grooving Cartridge



Drilling + Form Radius Machining + Spot Facing + Form Outer Chamfering



Drilling + O-ring Grooving



Shank Porcupine Milling

AND MORE +

Not Just Custom

For MTI Tools, a standard tool is a custom tool produced in high volumes.
The same precision, the same quality control, the same care...

High-volume production for the cutting inserts of established brands in the industry...





MTI-LNMU0303



MTI-TNMU 1207..



MTI-BLMP 0603..

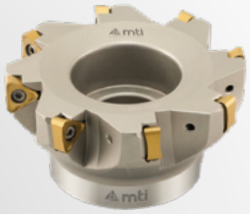

MTI-TN.X 2207..



MTI-LOGU 0904..



MTI-AO.. 1236..



MTI-WNMX 09T3..



MTI- SN.. 1206..



MTI- LOGU 0303..



MTI-BDMT 11T3..



MTI- AX.T 1235..



MTI-R290-12T3.

AND MORE +

Material

Our tool bodies are manufactured from TOOLOX 44, the new generation tool steel from the Swedish special steel manufacturer SSAB. Because it is delivered at a pre-hardness of 45 HRC, it does not require heat treatment; this shortens the delivery time and eliminates quality problems caused by heat treatment.

The low vibration in holders using Toolox 44 also ensures a long life for both the holder and the carbide inserts attached to it. The example below demonstrates this situation.

Application: End mill - Aluminum extrusion mold production



Max. ap	D	Z	D	Ds	L	Lf	ls	K (deg)	Kg	Hava deliği
1.0	16,00	2	9,5	16,0	150.0	50.0	100.0	15	0,20	var

Insert type: Tungaloy LNMU 03

Tool holder: Toolox 44 Diameter 21 mm

Surface treatment: Electroless Nickel Plating

Cutting parameters

V: 150 m/min

f: 0,75

a: 0,5 mm



Holder material	Hardness	Holder life	Holder damage mechanism	Carbide insert life
AISI 4340	42-44 HRC	10 days	Deformation and wear	4 - 5 molds
Toolox 44	45 HRC	5 months	Wear	9 - 10 molds

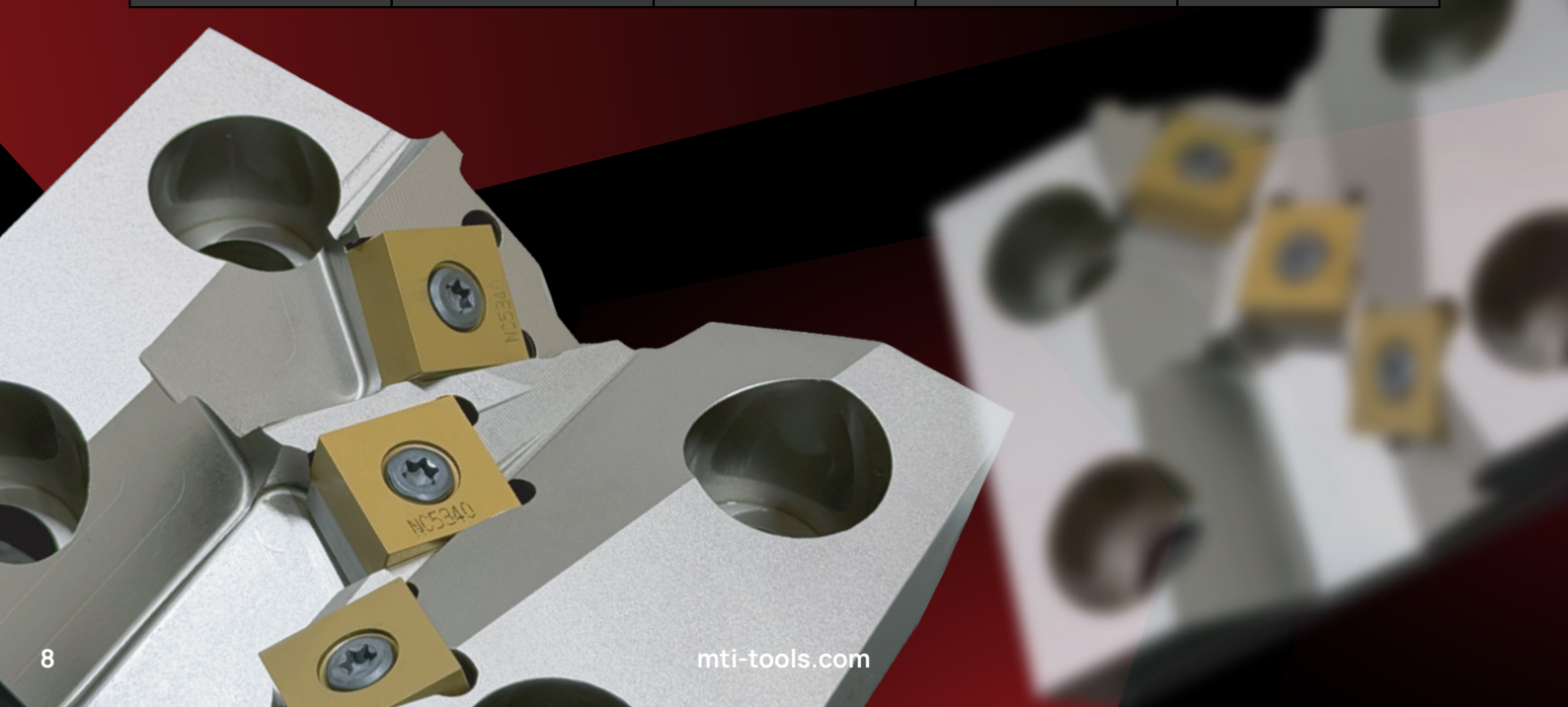

Quality Control

Producing the shape of a tool is easy; what is difficult is proving by measurement that it matches the drawing exactly. At MTI, no tool is shipped with just a visual inspection: every tool goes through the following scientific control steps and is delivered with a measurement report.

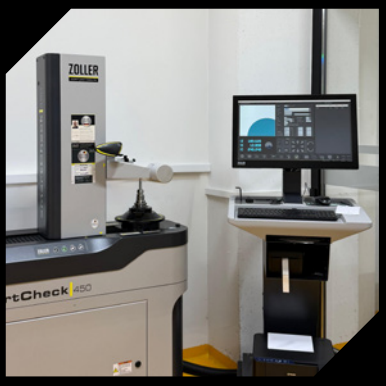

Every tool is measured with micron precision on the ZOLLER measuring machine before shipment. Over 100 parameters, including diameter, helix, and cutting edge, are checked; out-of-tolerance tools do not leave the factory.

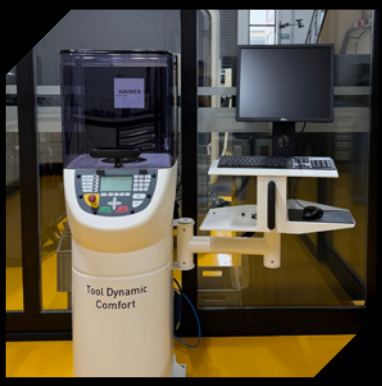

Every finishing tool is tested on the HAIMER balancing machine. Imbalance means vibration, poor surface finish, and short spindle life; a tool whose balance is not verified is not shipped.

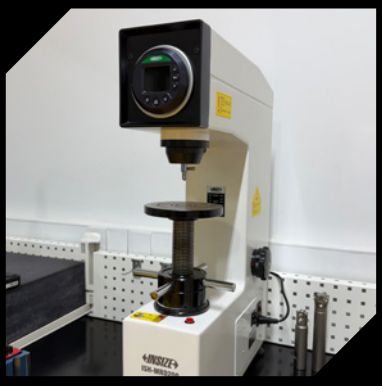

For heat-treated materials, post-treatment hardness is measured; production does not continue without verifying the target value and homogeneity.

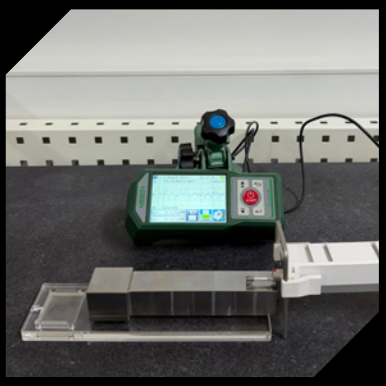

The roughness values of insert pockets and machined surfaces are measured. Correct surface quality ensures the insert sits perfectly and guarantees repeatable machining performance.




mti
METALWORKING TOOL INDUSTRY
NLX 2500|700
WS-02
astor

METALWORKING TOOL INDUSTRY

SR Endüstri Kesici Takımlar
Sanayi ve Ticaret Ltd. Şti.

Şeyhli Mah. Vadi sok. No: 6A
Aktürk San. Sit. A-11
34906 Pendik / İSTANBUL

+90 507 080 60 05

info@mti-tools.com

@mtitools

mti

METALWORKING TOOL INDUSTRY

Where the catalog ends,
we begin.

mti-tools.com