RUGGED panel mounting *digital displays* for Zones 1 & 2, Ex e or Ex p Systems

for use in **hazardous**

and **safe areas**



visit our website **www.beka.co.uk**

- *Stainless Steel enclosures with toughened glass window*
- *Impact and IP66 front of panel protection*
- *May be safely installed in Ex e, Ex p & Ex t certified cabinets*
- *Ex ec Models for installation in Ex e, Ex p or Ex t cabinet located in Zone 2 or 22 do not require a barrier or isolator.*
- *Ex i Models for installation in Ex e, Ex p or Ex t cabinet located in Zone 1, 2, 21 or 22*
- *General Purpose Models*

BEKA

Intrinsically Safe since 1983

RUGGED *panel mounting*
digital displays *for* **Zones 1 & 2, Ex e or Ex p Systems**

For use in marine or harsh environments where the front of the instrument may be impacted, this display range has been extended to include models with larger 4 and 5 digit displays.

Standard features on all models



- Rugged 316 stainless steel enclosure with thick toughened glass window provides impact protection.
- High contrast displays with a wide viewing angle.
- Choice of display size:
  4 digits - 15 or 34mm high
  5 digits - 12.7 or 29mm high with 31 segment bargraph
- IP66 Front of Panel
- Optional backlight and isolated dual alarms
- Easy scale card installation
- Internationally certified Ex ia intrinsic safety and Ex nA models
- High quality. Designed and manufactured in the UK.

Intrinsically safe rugged displays may be installed in any IP20 panel enclosure. The instrument's certification also permits installation in an Ex e increased safety, Ex p pressurised, or an Ex t dust protect panel enclosure without invalidating the panel enclosure's certification. This allows these rugged displays to be safely mounted in a certified Ex e, Ex p or Ex t panel enclosure protecting equipment such as motor controls, or a gas analyser.

Ex ec displays when mounted in a certified enclosure, do not require Zener barriers or galvanic isolators which significantly reduces installation cost for Zone 2 applications.

General purpose models are ideal for applications in harsh and marine environments, or where the front of the instrument is likely to be impacted.



Like all BEKA instruments, there is no additional charge for customer specified calibration and custom scale card labelling. BEKA indicators are delivered ready for installation.

These Rugged Panel Mounting Displays are just part of the extensive range of BEKA field and panel mounting loop powered instruments resulting from more than 40 years of continuous development.

Rugged indicator maintains panel enclosure's impact and ingress protection and does not invalidate its certification. (BA324G-SS-PM).

4/20mA Input
Loop Powered Digital Indicators

An extensive range of panel mounting 4/20mA loop powered indicators to display any process value.



- **Input 4/20mA**
- **Internal calibrator, root extractor, lineariser & tare function**
- **-40 to +70˚C operating temperature range**
- **Accessories**
  - Dual isolated alarms
  - Display backlight
  - Scale card
  - BA495 rear IP66 sealing kit

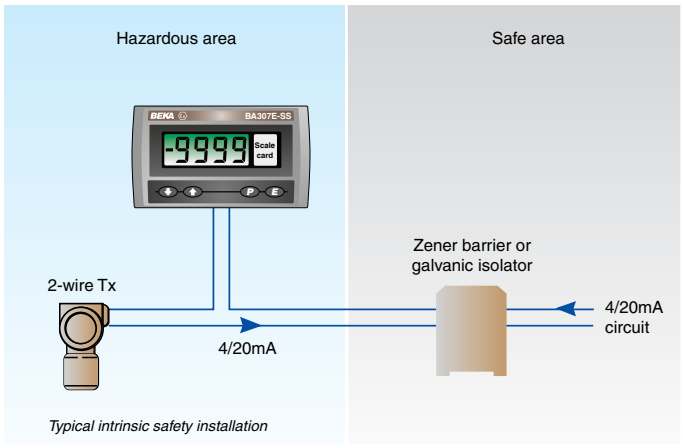

Typical intrinsic safety installation



Models available

Model No.	Enclosure	Display				Certification					
		Digits		Bargraph		Europe ATEX		International IECEx		USA & Canada	
		Number	Height	Segments	Length	Gas	Dust	Gas	Dust	Gas	Dust
Ex ia intrinsically safe - for use in Zones 0, 1 & 2 and 20, 21 & 22											
BA304G-SS-PM*	120 x 122	4	34mm	–	–	✔	✔	✔	✔	–	–
BA324G-SS-PM*	120 x 122	5	29mm	31	83mm	✔	✔	✔	✔	–	–
BA307E-SS*	105 x 60	4	15mm	–	–	✔	✔	✔	✔	✔	–
BA327E-SS*	105 x 60	5	12.7mm	31	44mm	✔	✔	✔	✔	✔	–
Ex ec & Ex tc - for use in Zones 2 and 22 without Zener barriers or galvanic isolators											
BA307SE	105 x 60	4	15mm	–	–	✔	✔	✔	✔	✔	✔
BA327SE	105 x 60	5	12.7mm	31	44mm	✔	✔	✔	✔	✔	✔
General Purpose - for use in safe areas											
BA504G-SS-PM	120 x 122	4	34mm	–	–						
BA524G-SS-PM	120 x 122	5	29mm	31	83mm						
BA507E-SS	105 x 60	4	15mm	–	–						
BA527E-SS	105 x 60	5	12.7mm	31	44mm						

** Certification allows installation in an Ex e, or Ex p or Ex t panel enclosure without invalidating enclosure certification*

PULSE Input
Rate Totalisers

Pulse input rate totalisers which can display rate and total flow separately. These instruments will operate with most types of sensor and all models include square root extraction and an adjustable lineariser. The rugged stainless steel totalisers can be safely mounted in a certified Ex e, Ex p or Ex t panel enclosure without invalidating the panel enclosure's certification.



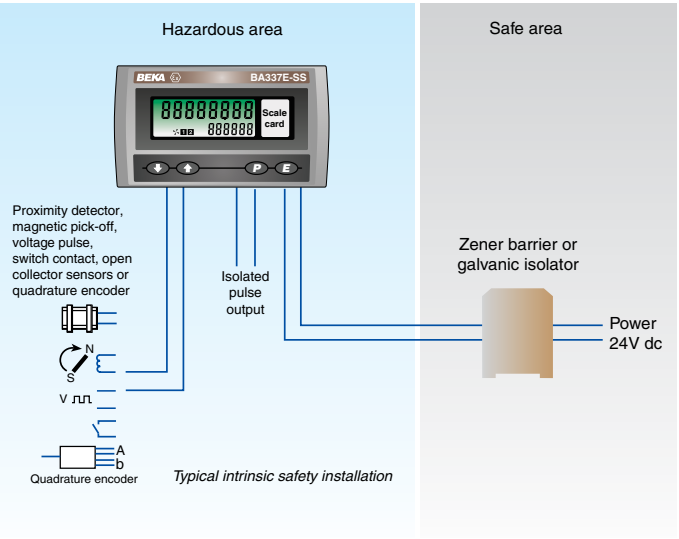

> Input types:

Switch contact
Proximity detector (NAMUR)
Open collector
Magnetic pick-off
Voltage pulse (low)
Voltage pulse (high)

> -40 to +70˚C operating temperature range

> Accessories

Isolated pulse output
Dual isolated alarms
Isolated 4/20mA output
Backlight
Scale cards - *can be supplied printed with units of measurement and tag information for no additional charge.*
IP66 rear sealing kit.

Models available

Model No.	Enclosure	Input	Powered	Display digits		Certification					
						Europe ATEX		International IECEx		USA & Canada	
				TOTAL No. x height	RATE No. x height	Gas	Dust	Gas	Dust	Gas	Dust
Ex ia intrinsically safe - for use in Zones 0, 1 & 2 and 20, 21 & 22 where certified											
BA337E-SS*	Rugged 105 x 60	Pulse	External	8 x 9mm	6 x 6mm	✔	✔	✔	✔	✔	✔
General Purpose - for use in safe areas											
BA537E-SS	Rugged 105 x 60	Pulse	External	8 x 9mm	6 x 6mm						

** Certification allows installation in an Ex e, or Ex p or Ex t panel enclosure without invalidating enclosure certification*

PULSE Input Counters

Pulse counters which can display total and rate on separate displays in the same or different engineering units.

> **Input types:**
Switch contact
Proximity detector (NAMUR)
Open collector
Magnetic pick-off
Voltage pulse (low)
Voltage pulse (high)

> **-40 to +70˚C operating temperature range**

> **Accessories**
Isolated pulse output
Dual isolated alarms
Isolated 4/20mA output
Backlight
Scale cards - *can be supplied printed with units of measurement and tag information for no additional charge.*
IP66 rear sealing kit.



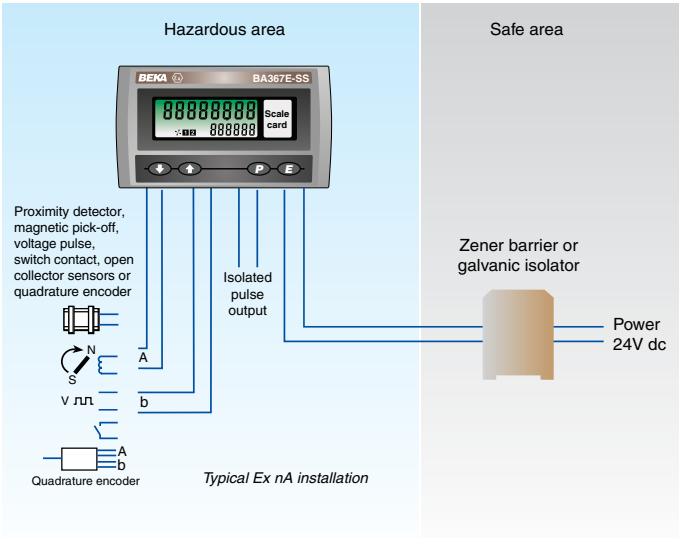

Models available

Model No.	Mounting	Input	Display digits		Certification					
					Europe ATEX		International IECEx		USA & Canada	
			TOTAL No. x height	RATE No. x height	Gas	Dust	Gas	Dust	Gas	Dust
Ex ia intrinsically safe - for use in Zones 0, 1 & 2 and 20, 21 & 22 where certified										
BA367E-SS*	Panel Rugged 105 x 60	Pulse	8 x 9mm	6 x 6mm	✔	✔	✔	✔	✔	✔
General Purpose - for use in safe areas										
BA567E-SS	Panel Rugged 105 x 60	Pulse	8 x 9mm	6 x 6mm						

** Certification allows installation in an Ex e, Ex p or Ex t panel enclosure without invalidating enclosure certification*

PULSE Input Tachometers

A tachometer for panel applications which can display speed and run-time on separate displays. Operates with most transducers.

> **Input types:**
Switch contact
Proximity detector (NAMUR)
Open collector
Magnetic pick-off
Voltage pulse (low)
Voltage pulse (high)

> **-40 to +70˚C operating temperature range**

> **Accessories**
Isolated pulse output
Dual isolated alarms
Isolated 4/20mA output
Backlight
Scale cards - *can be supplied printed with units of measurement and tag information for no additional charge.*
IP66 rear sealing kit.



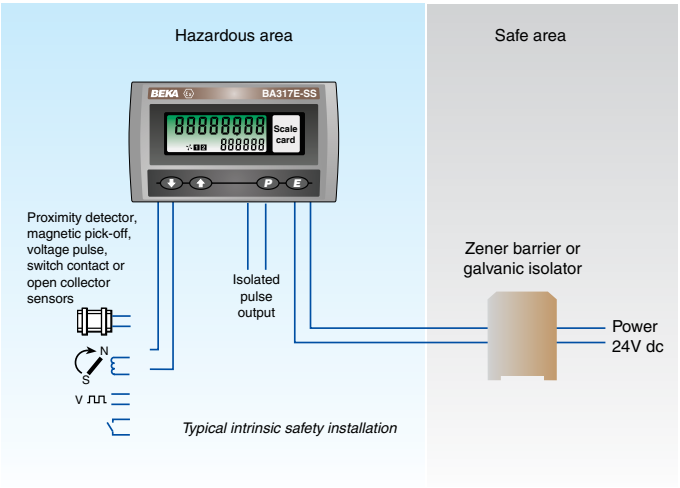

Models available

Model No.	Mounting	Input	Display digits		Certification					
			SPEED No. x height	RUN-TIME No. x height	Europe ATEX		International IECEx		USA & Canada	
					Gas	Dust	Gas	Dust	Gas	Dust
Ex ia intrinsically safe - for use in Zones 0, 1 & 2 and 20, 21 & 22 where certified										
BA317E-SS*	Panel Rugged 105 x 60	Pulse	8 x 9mm	6 x 6mm	✔	✔	✔	✔	✔	✔

** Certification allows installation in an Ex e, Ex p or Ex t panel enclosure without invalidating enclosure certification*

General Purpose - for use in safe areas										
BA517E-SS	Panel Rugged 105 x 60	Pulse	8 x 9mm	6 x 6mm						

PULSE Input
Timer/Clocks

Instruments that can be configured as a Timer or as a Clock.
As a Timer they can measure and display elapsed time between events, or control events via optional control outputs. As a Clock local time is displayed and optional control outputs can be configured to turn on and off twice in each 24 hour period.

> **Input types:**
Switch contact
Proximity detector (NAMUR)
Open collector
Magnetic pick-off
Voltage pulse (low)
Voltage pulse (high)

> **-40 to +70˚C operating temperature range**

> **Accessories**
Dual isolated outputs
Backlight
Scale cards - *can be supplied printed with units of measurement and tag information for no additional charge.*
IP66 rear sealing kit.



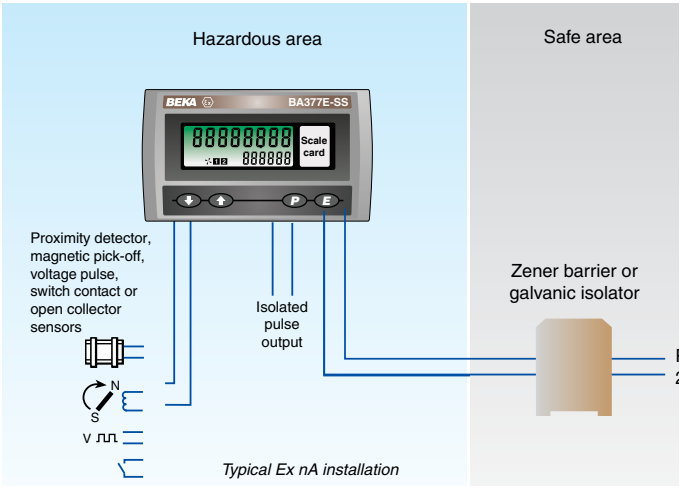

Models available

Model No.	Mounting	Input	Display digits		Certification					
					Europe ATEX		International IECEx		USA & Canada	
			PRIMARY No. x height	SECONDARY No. x height	Gas	Dust	Gas	Dust	Gas	Dust
Ex ia intrinsically safe - for use in Zones 0, 1 & 2 and 20, 21 & 22 where certified										
BA377E-SS*	Panel Rugged 105 x 60	Sensor	8 x 9mm	6 x 6mm	✔	✔	✔	✔	✔	✔
General Purpose - for use in safe areas										
BA577E-SS	Panel Rugged 105 x 60	Sensor	8 x 9mm	6 x 6mm						

** Certification allows installation in an Ex e, Ex p or Ex t panel enclosure without invalidating enclosure certification*

4/20mA Output
Set Point Station [Generator]

For manually adjusting a 4/20mA process variable or controller set point from within a hazardous or safe area using the instrument's push buttons. These loop powered instruments incorporate a display to show the operator the 4/20mA current in engineering units.

- **> Output 4/20mA**
- **> -40 to +70˚C operating temperature range**
- **> Accessories**
  Display backlight
  Scale card
  Rear IP66 sealing kit



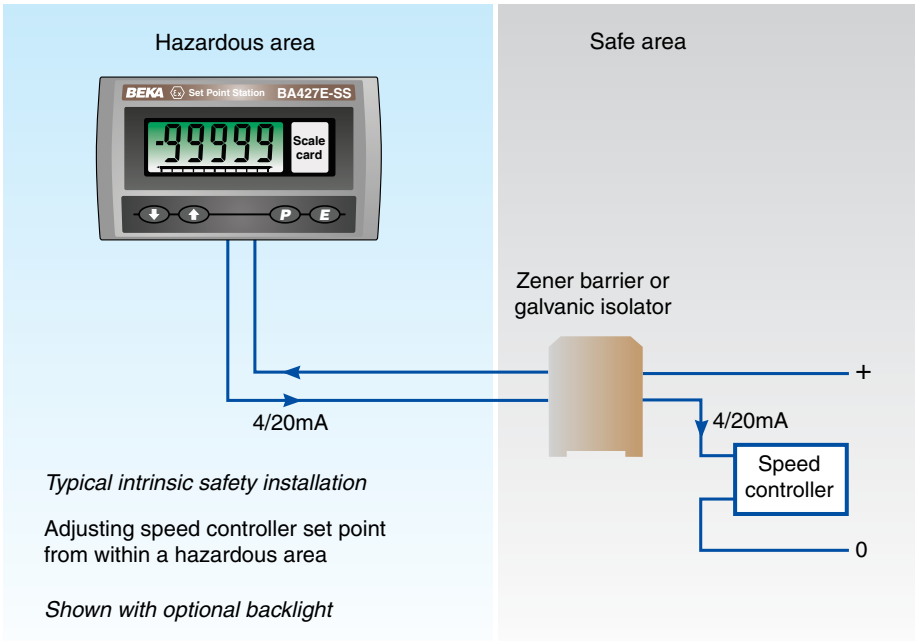

Typical intrinsic safety installation

Adjusting speed controller set point from within a hazardous area

Shown with optional backlight

Models available

Model No.	Mounting	Display digits	Certification					
			Europe ATEX		International IECEx		USA & Canada	
		No. x height	Gas	Dust	Gas	Dust	Gas	Dust
Ex ia intrinsically safe - for use in Zones 0, 1 & 2 and 20, 21 & 22 where certified								
BA427E-SS*	Panel Rugged 105 x 60	5 x 11mm bargraph	✔	✔	✔	✔	–	–
General Purpose - for use in safe areas								
BA627E-SS	Panel Rugged 105 x 60	5 x 11mm bargraph						

** Certification allows installation in an Ex e, Ex p or Ex t panel enclosure without invalidating enclosure certification*

UNIVERSAL Input
Process Panel Meters with MULTICOLOUR displays

High quality universal process panel meters featuring multicoloured, negative liquid crystal five digit and bargraph displays which are visible in all lighting conditions from bright sunlight to total darkness. The display colour is fully adjustable and can be linked to the meter's optional alarms, providing operators with a very conspicuous status warning. Display colours and brightness can easily be adjusted on-site to match other instrumentation on the panel.

The meters have process current, voltage and resistance thermometer inputs, with separate versions for powering from a low voltage dc or from an ac mains supply.

> **General purpose only**

> **Large high contrast multicolour 5 digit display with bargraph**
Fully adjustable display colour
Visible in all lighting conditions
Negative liquid crystal technology

> **Input - may be configured on-site**
4-20mA or 0-50mA
0-100mV, 0-1V or 0-10V
Pt100 2-wire or 3-wire RTD

> **Power supply - separate versions for:**
10 to 36V dc
90 to 264V ac 47-63Hz

> **IP66 front of panel protection with toughened glass window**

> **-40 to +55˚C operating temperature range**

> **Accessories**
Isolated Modbus RTU

Dual isolated alarms with changeover contacts, alarms can be linked to display colour.

Isolated 4/20mA output

Isolated 24V transmitter power supply

IP66 rear sealing kit

Scale cards - *can be supplied printed with units of measurement and tag information for no additional charge.*



General Purpose - for use in safe areas	
Model No.	***Separate versions for 10-36V dc or 90 to 264V ac supplies***
A90-SS	Rugged universal process meter in stainless steel enclosure

Accessories
for PANEL mounting instruments

Small Rugged panel models (105 x 60mm)

SLIDE IN SCALE CARD

A slide-in scale card can be fitted without removing the instrument from the panel or opening the instrument enclosure. A customer specified scale card is a no cost accessory when a small rugged panel instrument is ordered. A pack of 30 scale cards pre-printed with common legends is available for on-site configuration.

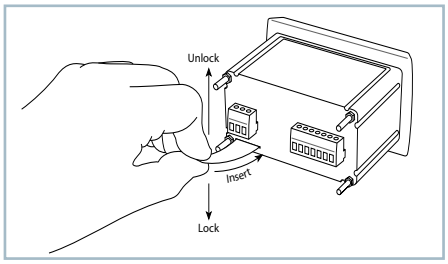

Scale card for rugged panel instruments is inserted from the rear of the instrument.



REAR COVER AND SEALING KIT

The BA495 rear cover and sealing kit provides impact and IP66 ingress protection for a single 96 x 48mm or a 105 x 60mm rugged instrument. The 316 stainless steel rear cover has two M20 cable entries, one fitted with a blanking plug. *Note: cannot be used with stainless steel support plate.*



BA495 rear IP66 sealing kit

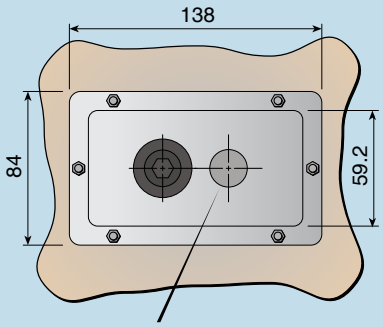

2 M20 entries, 1 fitted with blanking plug

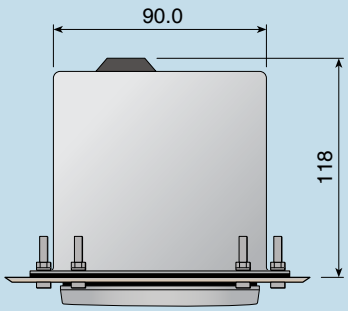

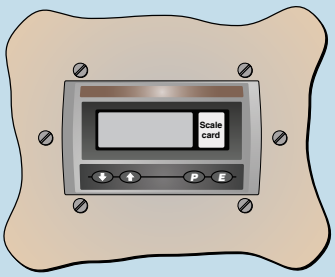

TAG NUMBER

Customer specified tag number or application information can be thermally printed or laser etched onto the instrument rear panel adjacent to the terminals.

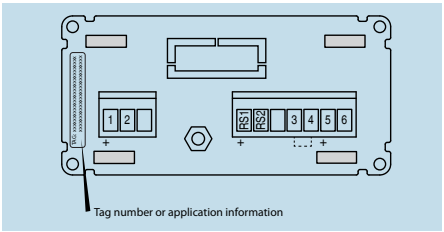

Tag number or application printed on rear panel of instrument.

All instruments can typically accommodate up to 2 rows of 18 characters

Rugged panel models -PM (120 x 122)

SLIDE IN SCALE CARD

All 'G-SS' suffix panel mounting instruments have a slide-in scale card which can accommodate scale and tag marking. If requested the instrument can be supplied with the scale card printed to show customer specified units of measurement, tag and application information.

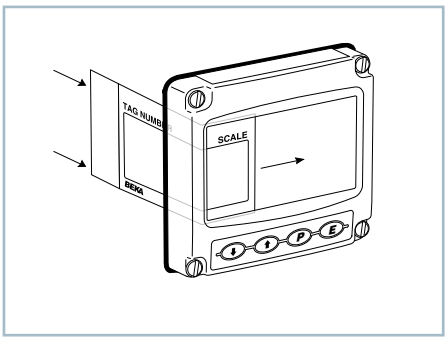

Dimensions

BA3x7E-SS, BA3x7E-SS, BA3x7NE
BA5x7E-SS and BA5x7E-SS. BAx27E-SS and A90-SS

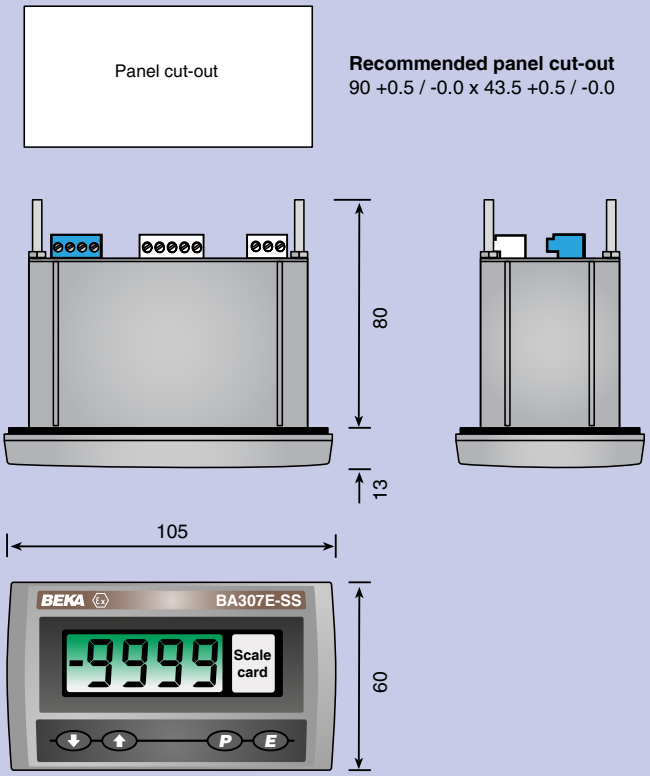

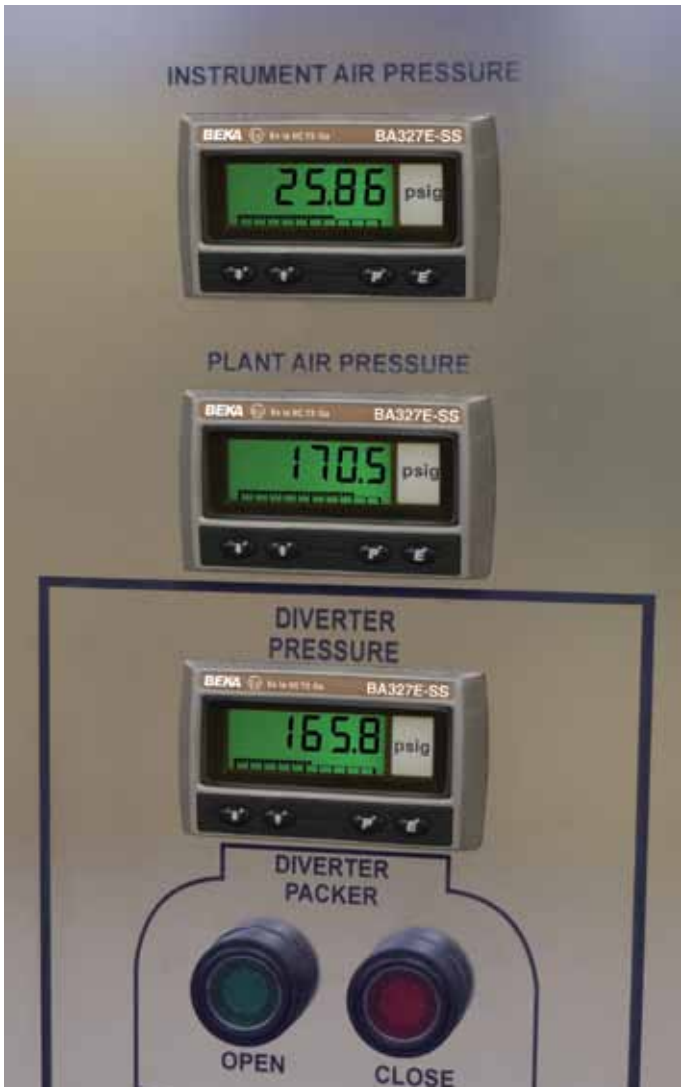

BA3x4G-SS-PM and BA5x4G-SS-PM

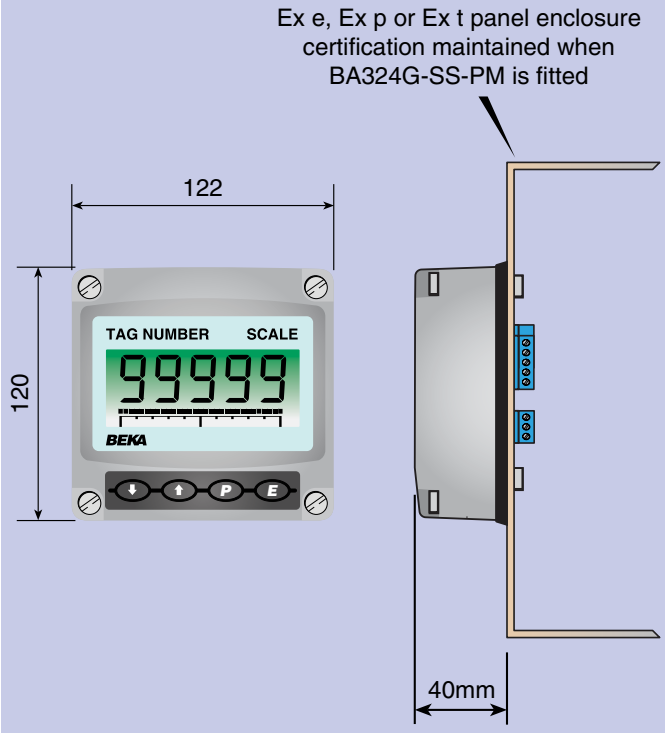

*A **RUGGED***
*panel mounting **digital display***
*for every **application**.....*
*delivered ready for **installation***

www.beka.co.uk

Why Buy BEKA ?



- *Three-Year warranty on all products*
- *Fast manufacturing times*
- *Widest range available of hazardous area indicators and displays*
- *International certifications for global applications*
- *High reliability products for hazardous areas and general purpose applications*
- *Privately owned by engineers designing products for engineers since 1983*
- *Direct telephone or email contact to sales team and knowledgeable engineers*
- *Excellent customer support pre and post sales*
- *World-wide support network of agents and distributors*
- *Set-up and scale printing on most models for no additional charge*
- *Comprehensive website and easy access to all documentation*

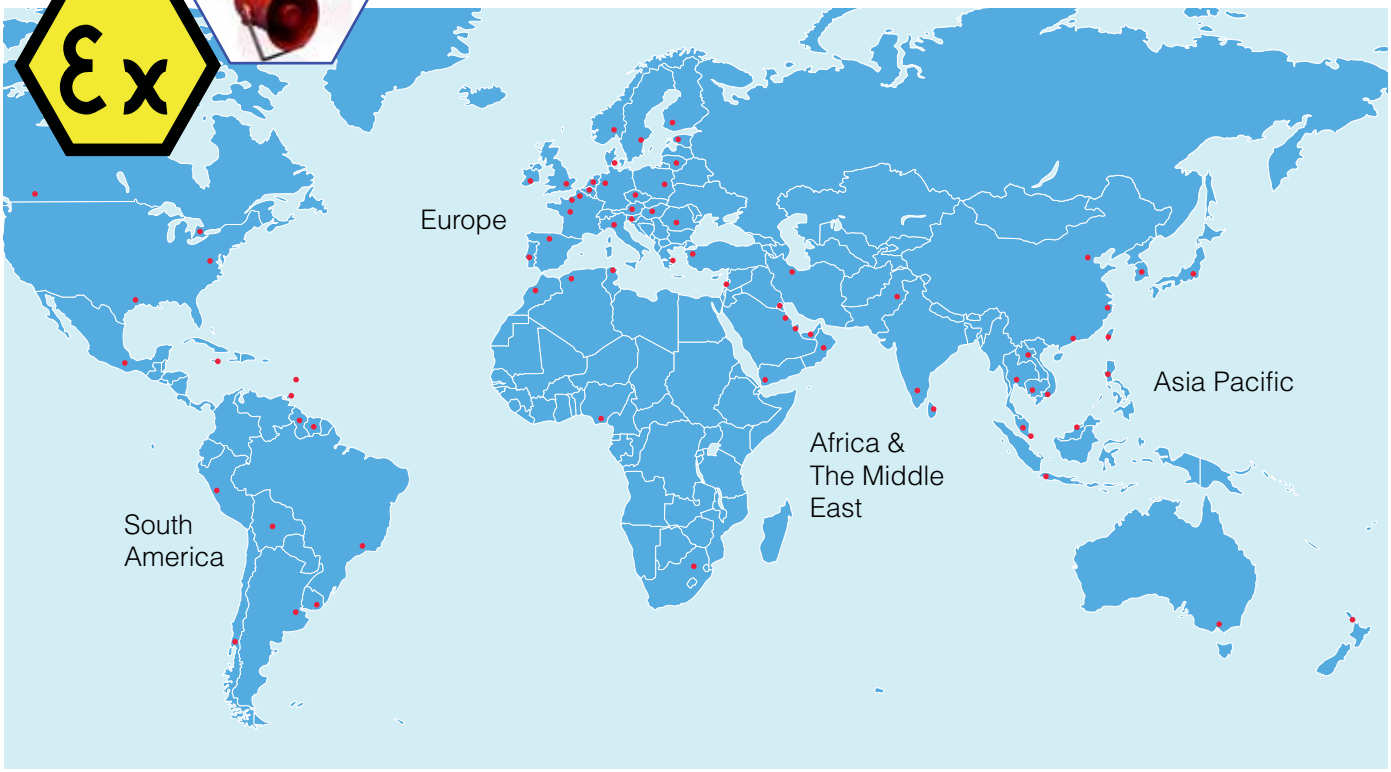

BEKA associates Ltd
Old Charlton Road, Hitchin, Hertfordshire SG5 2DA England
Telephone +44 (0) 1462 438301
www.beka.co.uk
e-mail: sales@beka.co.uk

Printed in EU 07-26