BA304SG & BA324SG
Increased safety Ex eb and dust ignition protection by enclosure Ex tb loop-powered field mounting indicators

For instrument with serial numbers above 094433/01/002

Issue 4

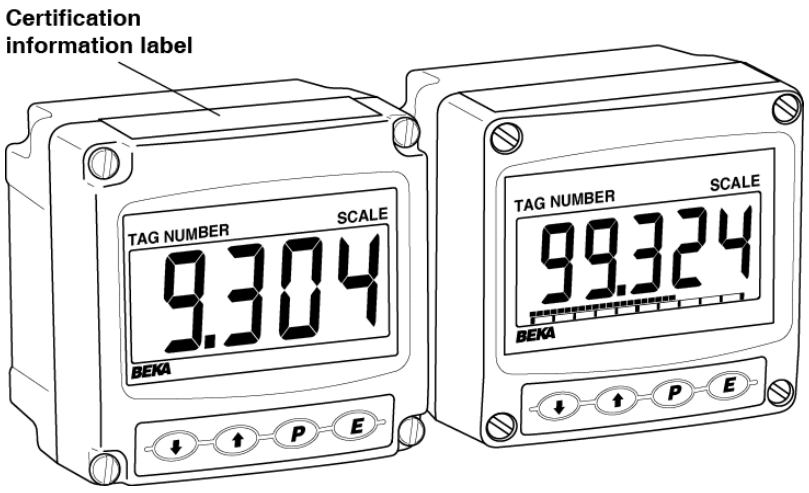

Issue: 4
7th May 2026

CONTENTS

1. Description

2. Operation
- 2.1 Controls

3. Certification
- 3.1 IECEx, ATEX & UKEX Ex eb certification
- 3.2 Zones, gas groups & T rating
- 3.3 Specific conditions of use
- 3.4 Certification label information

4. System Design for Gas Hazardous Areas
- 4.1 Transmitter loops
- 4.2 Remote indication
- 4.3 Monitoring hazardous area equipment

5. Installation
- 5.1 Location
- 5.2 Earthing
- 5.3 Cable gland and conduit fittings
- 5.4 Cables and wiring
- 5.5 Installation procedure
- 5.6 EMC
- 5.7 Units of measurement and tag marking on scale card.

6. Configuration and Calibration
- 6.1 Summary of configuration functions
- 6.2 Indicator function: FunC
- 6.3 Resolution: rESn
- 6.4 Position of the decimal point: dP
- 6.5 Calibration using an external current source: CAL.
- 6.6 Calibration using internal reference: SEt
- 6.7 Bargraph format and calibration: bAr
- 6.8 Function of the P push-button: C--P
- 6.9 Tare function: tArE
- 6.10 Security code: CodE
- 6.11 Reset to factory defaults: rSEt
- 6.12 Under and over-range

7. Lineariser
- 7.1 Lineariser calibration using an external current source.
  - 7.1.1 Example, Adding break-points to a new indicator.
- 7.2 Lineariser calibration using internal reference.
  - 7.2.1 Example, Adding break-points to a new indicator.
- 7.3 Under and over-range
- 7.4 Lineariser default configuration

8. Maintenance
- 8.1 Fault finding during commissioning
- 8.2 Fault finding after commissioning
- 8.3 Servicing
- 8.4 Routine maintenance
- 8.5 Guarantee
- 8.6 Customer comments

9. Accessories
- 9.1 Units of measurement and instrument identification.
- 9.2 Display backlight
- 9.3 Pipe mounting kit
- 9.4 Panel mounting kit

Appendix 1 Ex tb dust certification

Appendix 2 ETL and cETL certification

The BA304SG and BA324SG are CE marked to show compliance with the European Explosive Atmospheres Directive 2014/34/EU and the European EMC Directive 2014/30/EU.
They are also UKCA marked to show compliance with UK statutory requirements Equipment and Protective Systems Intended for Use in Potentially Explosive Atmospheres Regulations UKSI 2016:1107 (as amended) and with the Electromagnetic Compatibility Regulations UKSI 2016:1091 (as amended).

1. DESCRIPTION

The BA304SG and BA324SG are field mounting, increased safety Ex eb loop powered 4/20mA digital indicators. They feature large, easy to read displays and are a less expensive, easier to install, alternative to most flameproof Ex d indicators.

All models have IECEx, ATEX, UKEX, ETL and cETL certification and may be installed exactly as an Ex d flameproof indicator in Zones 1 or 2. The indicators may be safely connected in series with a 4/20mA hazardous area loop employing any type of certified explosion protection, including flameproof Ex d, pressurised Ex p, encapsulated Ex m or increased safety Ex e. The indicators should not be used in intrinsically safe Ex i loops.

All models may be used as replacements for obsolete Ex nA indicators in Zone 2.

Except for ETL and cETL certification, the certification for all models includes dust ignition protection by enclosure Ex tb allow installation in Zones 21 and 22. The indicator's dust certification is described in Appendix 1.

The 4 and 5 digit models are mechanically and electrically identical, but have different size displays. Both are available with a GRP or a 316 stainless steel enclosure.

Model	Display
BA304SG GRP enclosure	4 digits 34mm high.
BA304SG-SS Stainless steel enclosure	4 digits 34mm high.
BA324SG GRP enclosure	5 digits 29mm high and 31 segment bargraph.
BA324SG-SS Stainless steel enclosure.	5 digits 29mm high and 31 segment bargraph.

A factory fitted, loop powered display backlight is available as an option.

This instruction manual supplements the instruction sheet supplied with each instrument.

The main application of both models is to display a measured variable or control signal in a gas or dust hazardous process area. The zero and span of the display are independently adjustable, so that the indicator can be calibrated to display in engineering units any variable represented by the 4/20mA current, such as temperature, flow, pressure or level.

2. OPERATION

Fig 1 shows a simplified block diagram of all models. The indicators are loop powered by the 4/20mA input current and incorporate encapsulated Ex m and intrinsically safe Ex i assemblies, but they do not require protection by an external Zener barrier or a galvanic isolator.

Each time a 4/20mA current is applied to the indicator, initialisation is performed during which all segments of the display are activated, after five seconds the instrument displays the input current using the calibration information stored in the instrument's permanent memory. If the loop current is too low to power the instrument, the indicator will display the error message LPLo.

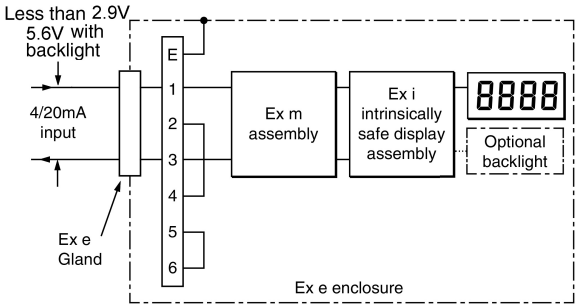

Fig 1 Indicator block diagram

A BEKA video VDO 0520 explains the design concept, and BEKA Application Guide AG320 includes installation examples. Both can be downloaded from the BEKA website.

2.1 Controls

Both models are controlled and calibrated via four front panel push buttons which may be operated while the indicator is energised in a hazardous area. In the display mode i.e. when the indicator is displaying a process variable, these push buttons have the following functions:

P	While this button is pushed, the indicator will display the input current in mA, or as a percentage of the instrument span depending upon how the indicator has been configured. When the button is released, the normal display in engineering units will return.
▼	While this button is pushed, the indicator will display the numerical value and analogue bargraph [1] the indicator has been calibrated to display with a 4mA [2] input. When released the normal display in engineering units will return.
▲	While this button is pushed, the indicator will display the numerical value and analogue bargraph [1] the indicator has been calibrated to display with a 20mA [2] input. When released the normal display in engineering units will return.
E	No function in the display mode unless the tare function is being used.
P + ▼	Indicator displays firmware number followed by version.
P + E	Provides access to the configuration menu via optional security code.

Notes:

[1] Only the BA324SG has a bargraph

[2] If the indicator has been calibrated using the CAL function, calibration points may not be 4 and 20mA.

3. CERTIFICATION

All models have IECEx, ATEX and UKEX Ex eb increased safety and Ex tb dust ignition protection by enclosure certification. The indicators also have ETL and cETL Ex eb increased safety certification

This section of the instruction manual describes IECEx, ATEX and UKEX Ex eb certification for installation in gas hazardous areas.

Ex tb certification for installation in dust hazardous areas is described in Appendix 1, and ETL certification is in Appendix 2.

3.1 IECEx, ATEX & UKEX Ex eb certification

Increased safety Ex eb is a type of electrical equipment protection which provides increased security against the possibility of excessive temperatures and against the occurrence of arcs and sparks. The requirements are defined by international standard IEC 60079-7.

To allow all models to be safely installed in Zone 1, the indicators incorporate an encapsulated Ex mb assembly. This encapsulated assembly has an intrinsically safe Ex ib output which powers the display and optional display backlight.

This technique is explained in BEKA video VDO 0520, and BEKA Application Guide AG320. Both can be downloaded from the BEKA website.

Certification Body Intertek Testing and Certification Ltd have issued all models with a common Certificate of Compliance:

IECEx ITS 19.0018X
Ex eb ib mb IIC T5 Gb
-40°C ≤ Ta ≤ +60°C

Intertek have also issued an ATEX EU - Type Examination Certificate:

ITS19ATEX304891X
II 2G Ex eb ib mb IIC T5 Gb
- 40°C ≤ Ta ≤ +60°C.

Note: Types of protection on both certificates are listed in alphabetical order.

The ATEX certificate confirms compliance with European standards, and has been used to support the BEKA Declaration of Conformity.

The indicators carry the community mark and, subject to local codes of practice, may be installed in any of the European Economic Area (EEA) member countries. ATEX certificates are also acceptable for installations in Switzerland and some other countries.

This section of the instruction manual describes installations in conforming with EN IEC 60079-14 *Electrical installations design, selection and installation of equipment including initial inspection*. When designing systems for installation outside the UK, the local Code of Practice should be consulted.

3.2 Zones, gas groups and T rating

Both models have been certified Ex eb ib mb IIC T5 Gb -40ºC ≤ Ta ≤ +60º. Types of explosion protection are listed in alphanumeric order. When connected in series with a 4/20mA loop the indicators may be installed in:

Zone 1	explosive gas air mixture likely to occur in normal operation.
Zone 2	explosive gas air mixture not likely to occur, and if it does will only exist for a short time.

Be used with gases in groups:

Group	A	propane
Group	B	ethylene
Group	C	hydrogen

In gases that may be used with equipment having a temperature classification of:

T1	450°C
T2	300°C
T3	200°C
T4	135°C
T5	100°C

Rated voltage U_N

U_N	30V dc.

At ambient temperatures between -40 and +60°C.

This allows all models to be used with most common industrial gases except carbon disulphide and ethyl nitrate which have an ignition temperature of 95°C.

3.3 Specific conditions of use

IECEx, ATEX and UKEX certificate numbers have an 'X' suffix indicating that specific conditions apply.

The certificates state that the indicators should be powered from a SELV (*separated or safety extra low voltage*) or PELV (*protected extra-low voltage) supply}*, or from an adequately approved supply providing double or reinforced insulation as specified in IEC 60079-14.

Usually this requirement does not cause any difficulty because instrument power supplies are required to be safe for personnel contact. In European terms, compliance with the Low Voltage Directive is mandatory, which satisfies the indicators certification specific conditions of use.

Like most flameproof indicators, the BA304SG and BA324SG Ex eb ib mb indicators have no maximum input current rating, only a maximum voltage rating U_N of 30V. All models may be used in exactly the same way as a certified flameproof indicator, providing the loop supply voltage is isolated and equal to or less than 30V dc.

3.4 Certification label information

The certification information label is fitted on the top surface of the instrument assembly. It shows the IECEx, ATEX and UKEX certification information and BEKA associates name and location. Non European certification information may also be shown. The instrument serial number and date of manufacture are recorded on a separate label inside the instrument enclosure.



BA304SG certification label

4. SYSTEM DESIGN FOR GAS HAZARDOUS AREAS.

These indicators are versatile and simple to apply, allowing them to be safely connected to hazardous area equipment employing any type of certified explosion protection such as, flameproof Ex d, pressurised Ex p, increased safety Ex e or Ex nA. They should not be used with energy limited protected equipment such as intrinsic safety Ex i or Ex nL.

4.1 Transmitter loops

The BA304SG and BA324SG may be connected in series with almost any hazardous area Zone 1 or Zone 2 4/20mA loop. They can be configured and calibrated on-site to display a measured variable or control signal in engineering units. The indicators are transparent to HART® signals.

There are three simple design requirements:

1. The loop must be able to tolerate the additional 2.9V required to operate the indicator. When fitted with an optional backlight this increases to 5.6V
2. The 4/20mA loop supply voltage must not exceed 30V dc.
3. The indicator should be fitted with Ex e certified cable glands and / or stopping plug.
4. Wiring should comply with the requirements of IEC 60079-14 *Electrical installations design, selection and installation of equipment including initial inspection.*

Fig 2 illustrates a typical application in which an indicator is connected in series with a 2-wire flameproof Ex d transmitter. Alternatively an increased safety Ex e, pressurised Ex p, or in Zone 2, a Type n Ex nA transmitter could be used.

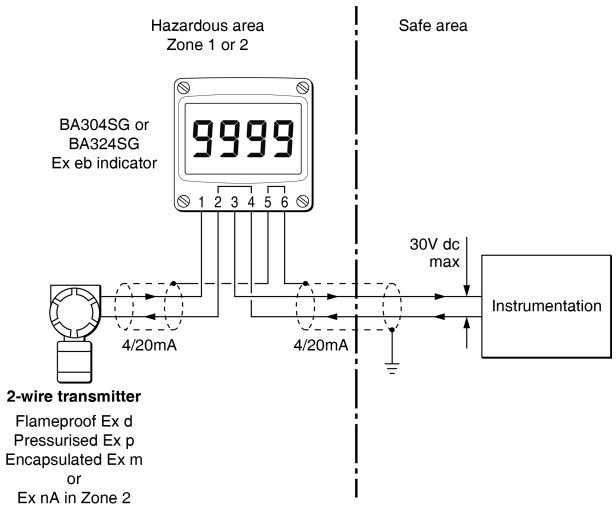

Fig 2 Typical application showing indicator displaying transmitter output.

4.2 Remote indication

All models may be driven from a safe area instrument with a 4/20mA output to provide a remote display within a Zone 1 or 2 hazardous area as shown in Fig 3.

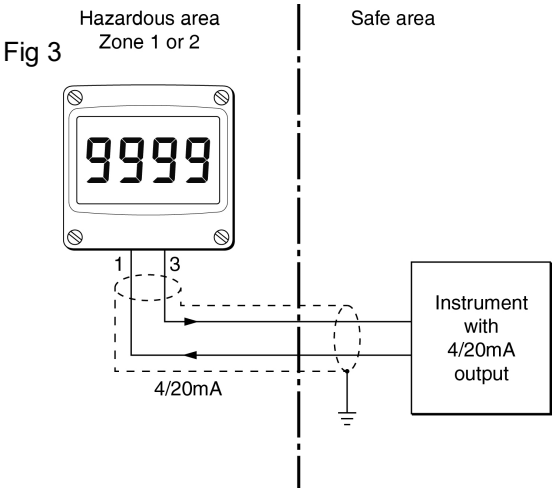

Fig 3 Remote indication in Zone 1 or 2

4.3 Monitoring hazardous area equipment

The BA304SG and the BA324SG provide a convenient way of monitoring a 4/20mA process variable in hazardous area equipment located inside, and protected by a flameproof Ex d enclosure.

Fig 4 shows how a 4/20mA output can be brought out of a flameproof enclosure via an Ex d gland, and displayed by a local BA304SG or BA324SG indicator, without the need for a Zener barrier or galvanic isolator within the flameproof enclosure.

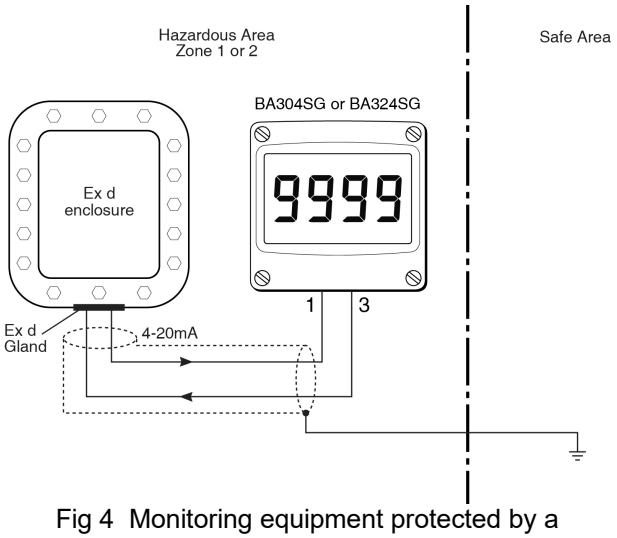

Fig 4 Monitoring equipment protected by a flameproof enclosure in Zone 1 or 2.

A similar technique may be used to monitor equipment protected by a pressurised Ex p enclosure.

5. INSTALLATION

5.1 Location

BA304SG and BA324SG indicators have a robust GRP or stainless steel enclosure that provides IP66 ingress protection after a 7J impact. The thick armoured glass window will withstand a 4J impact. Indicators in either enclosure are suitable for exterior mounting in most industrial on-shore and off-shore installations.

The indicators should be positioned where the display is not in continuous direct sunlight.

The field wiring terminals are located within the indicator enclosure back-box as shown in Fig 8. Indicator terminals 2 and 4 are internally joined and may be used for linking the return 4/20mA wire. Similarly, terminals 5 and 6 are internally joined and may be used for linking cable screens as shown in Figs 2 and 8.

The indicators are surface mounting, but may be pipe or panel mounted using one of the accessory kits described in sections 9.3 and 9.4.

5.2 Earthing

Unless the enclosure is mounted on a metal structure that ensures it is earthed, the indicator's internal earth terminal should be connected to a local earth.

Both the GRP enclosure, which is slightly conductive to prevent the build up of an electrostatic charge, and the stainless steel enclosure require earthing for personnel safety.

5.3 Cable glands and conduit fittings

Both back-box cable entries have M20 x 1.5 threads. The right hand entry is supplied fitted with an Ex e and Ex t certified stopping plug and the left hand entry with a temporary plug to prevent the ingress of dust and dirt during transportation.

Ex e plastic or metallic cable glands or conduit entries may be used. If two screened cables are used, the screens of each cable should be joined together using indicator terminals 5 and 6.

5.4 Cables and wiring

All Zone 1 and 2 wiring for any type of explosion protection, apart from intrinsic safety, should be mechanically robust, having a toughened outer sheath or armour. Wiring should have adequate voltage and current rating and should comply with the requirements of IEC 60079-14 *Electrical installations design, selection and installation of equipment including initial inspection.*

Cables should be suitable for the anticipated operating temperature, protected from voltage overloads and have a clearly defined means of isolation.

5.5 Installation Procedure

Fig 6 illustrates the installation procedure for all models.

Do not connect or disconnect an indicator when energised

A. Remove the indicator assembly by unscrewing the four captive 'A' screws. Lift the indicator assembly off the back-box and disconnect the two wires from the back-box using a small screwdriver to unlatch the connector locking mechanism as shown in Fig 5.

B. Mount the enclosure back-box on a flat surface and secure with screws or bolts through the four 'B' holes. Alternatively use a pipe or panel mounting kit described in sections 9.3 and 9.4.

C. Remove the temporary hole plug from the left hand cable entry and install an appropriate Ex e certified cable gland or conduit fitting. If two cable entries are required, the Ex e stopping plug fitted in the right hand cable entry should be removed and replaced with an appropriate Ex e certified cable gland or conduit fitting.

D. Connect the field wiring to the terminals in the back-box as shown in Fig 8. If the indicator enclosure is not mounted on a metal structure that provides a reliable earth, it should be earthed via the earth terminal.

E. Check that the indicator assembly sealing gasket is free from foreign bodies and plug the instrument assembly cable into the socket on the back-box. Finally replace the indicator assembly onto the back-box and evenly tighten the four 'A' screws.

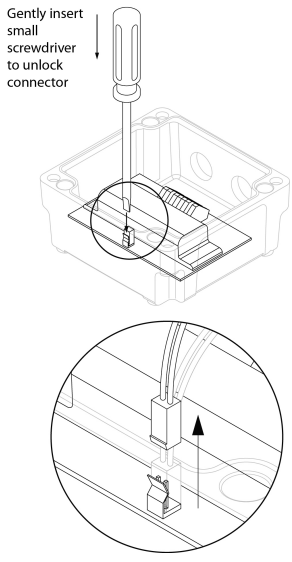

Fig 5 Unlatching the indicator assembly connector using a small screwdriver.



Step A
Unscrew the four captive 'A' screws, lift off the indicator assembly and disconnect the wires from the back-box as shown in fig 5.

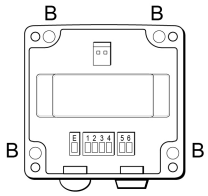

Step B
Secure the enclosure back-box to a flat surface with M6 screws through the four 'B' holes. Alternatively use a pipe on panel mounting kit.

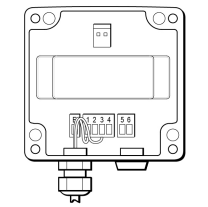

Step C
Remove the temporary hole plug and install an Ex e cable gland or conduit fitting. Feed the field wiring through the cable entry.

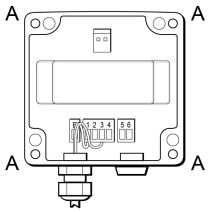

Step D
Connect field wiring to terminals in back-box

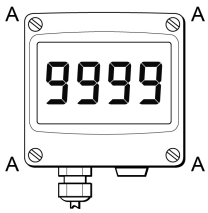

Step E
Reconnect the indicator assembly wires to the back-box. Check sealing gasket before replacing the indicator assembly and securing by evenly tightening the four 'A' screws.

Fig 6 Installation procedure

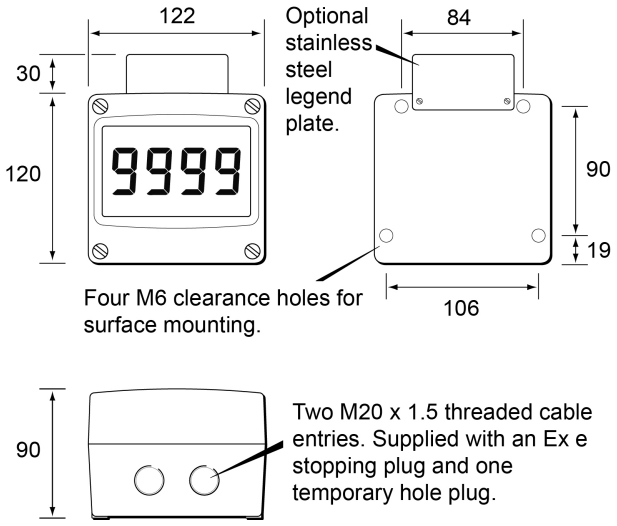

Fig 7a Dimensions of BA304SG and BA324SG which have a GRP enclosure.

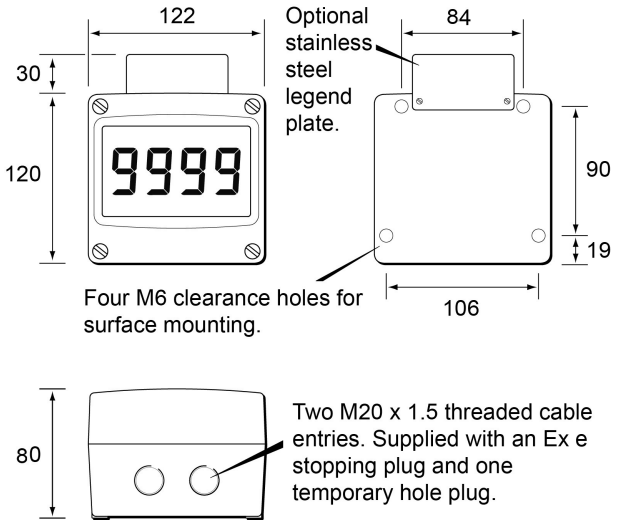

Fig 7b Dimensions of BA304SG-SS & BA324SG-SS which have a stainless steel enclosure.

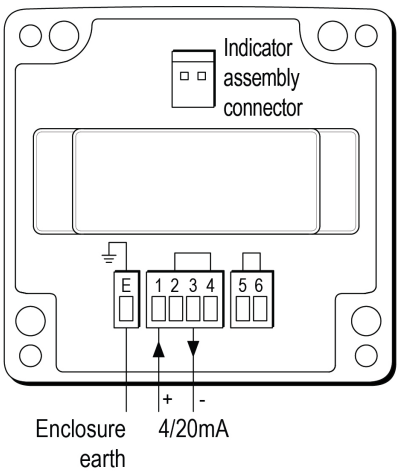

Terminals 2 & 4 internally linked for joining return 4/20mA wire.

Terminals 5 & 6 internally linked for joining cable screens.

Each terminal can accommodate one 0.2 - 2.5mm² solid conductor.
OR
One 0.2 - 1.5mm² stranded conductor.

Fig 8 Terminal connections

5.6 EMC

All models comply with the requirements of the European EMC Directive and the UK Statutory Requirements. For specified immunity all wiring should be in screened twisted pairs, with the screens earthed at one point in the safe area.

5.7 Units of measurement and tag marking on scale card.

The indicator's units of measurement and tag information may be shown on a scale card which slides into the indicator.

New indicators can be supplied with a printed scale card showing the requested units of measurement and tag information for no additional cost. If this information is not supplied when the indicator is ordered, a blank scale card will be fitted which can easily be marked on-site with a dry transfer or a permanent marker. Custom printed scale cards are available from BEKA associates as an accessory.

To remove the scale card from an indicator carefully pull the transparent tab at the rear of the indicator assembly away from the indicator as shown in Fig 9a.

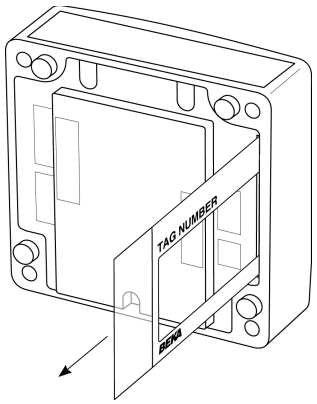

Fig 9a Removing scale card

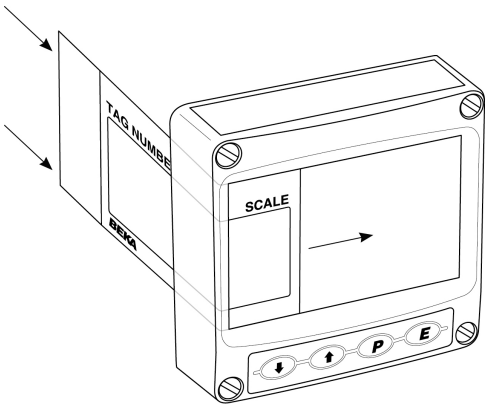

Fig 9b Inserting scale card into the instrument assembly.

To replace the scale card carefully insert it into the slot on the right hand side of the input terminals as shown in Fig 9b. Force should be applied evenly to both sides of the scale card to prevent it twisting. The card should be inserted until about 2mm of the transparent tab remains protruding.

6. CONFIGURATION AND CALIBRATION

Both models are configured and calibrated via the four front panel push buttons. The configuration functions are contained in an easy to use intuitive menu that is shown diagrammatically in Fig 10.

Each menu function is summarised in section 6.1 and includes a reference to more detailed information.

Throughout this manual push buttons are shown as (P), (E), (▼) or (▲), and display legends are shown in a seven segment font exactly as displayed by the indicator e.g. CAL and bAr.

Access to the configuration menu is obtained by operating the (P) and (E) push buttons simultaneously. If the indicator security code is set to the default 0000 the first parameter FunC will be displayed. If a security code other than the default code 0000 has already been entered, the indicator will display CodE. Pressing the (P) button will clear this prompt allowing each digit of the code to be entered using the (▼) or (▲) push button and the (P) button to move control to the next digit. When the correct four digit code has been entered pressing (E) will cause the first parameter FunC to be displayed. If the code is incorrect, or a button is not pressed within twenty seconds, the indicator will automatically return to the display mode.

Once within the configuration menu the required parameter can be reached by scrolling through the menu using the (▼) or (▲) push button as shown in Fig 10. When returning to the display mode following recalibration or a change to any function, the indicator will display dAtA followed by SAVE while the new information is stored in permanent memory.

All new indicators are supplied calibrated as requested at the time of ordering. If calibration is not requested, indicators will be supplied with the following default configuration:

Default Configuration

	BA304SG	BA324SG
Access code CodE	0000	0000
Function FunC	Linear	Linear
Display at 4mA 2Ero	0.0	0.00
Display at 20mA SPAn	100.0	100.00
Resolution rESn	1 digit	1 digit
Bargraph start bArLo	-----	0.00
Bargraph finish bArHi	-----	100.00
(P) button in display mode C--P	%	%
Tare tArE	Off	Off

6.1 Summary of configuration functions

This section summarises each of the main configuration functions and includes a cross reference to a more detailed description. Fig 10 illustrates the location of each function within the configuration menu. The linearisers is described separately in section 7 of this manual.

Display — Summary of function

FunC — Indicator function

Defines the relationship between the 4/20mA input current and the indicator display. May be set to:

- Std Standard linear relationship
- root Square root extraction
- Lin 16 segment adjustable linearisers – see section 7.

See section 6.2

rESn — Display resolution

Defines the resolution of the least significant display digit. May be set to 1, 2, 5 or 10 digits.

See section 6.3

dP — Decimal point

Positions a dummy decimal point between any of the digits or turns it off.

See section 6.4

CAL — Calibration of the digital display using an external current source.

Enables the zero and span of the indicator to be adjusted using an external current source such as a calibrator. When used with an accurate traceable current source this is the preferred method of calibration.

See section 6.5

SEt — Calibration of display using internal references.

Enables the zero and span of the indicator to be adjusted without the need for an accurate input current or disconnection from the 4/20mA loop. See section 6.6

bAr — Bargraph format and calibration

Only BA324SG indicators have a bargraph.

The bargraph may be conditioned to start from left, right or centre of the display, or it may be disabled. The bargraph may be calibrated to start and finish at any value within the indicator's calibrated digital display.

See section 6.7

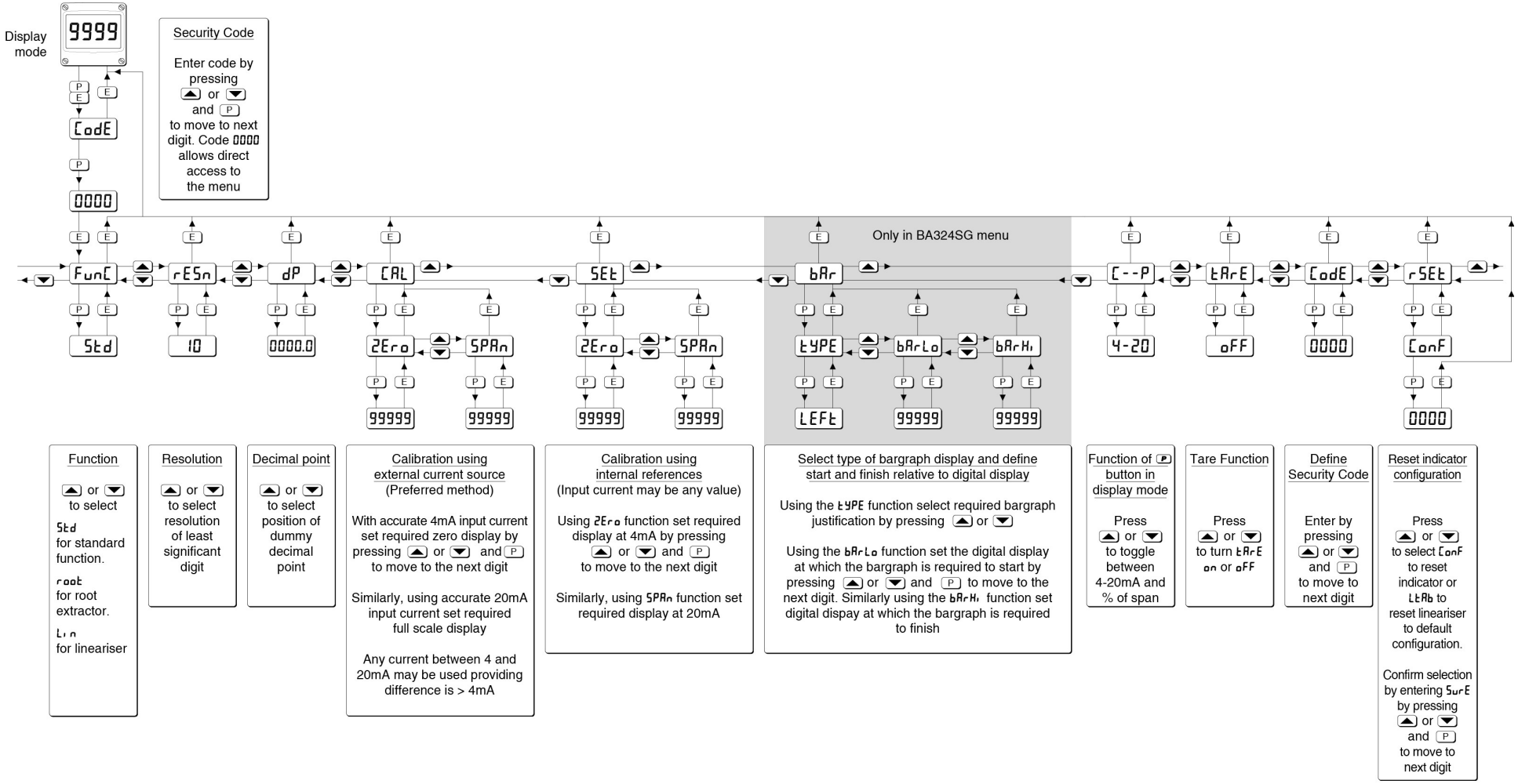

Fig 10 Configuration menu

Display Summary of function

C--P Function of (P) push button
The indicator may be configured to display the input current in milliamps, or the input current as a percentage of the 4/20mA input when the (P) push button is operated in the display mode.
See section 6.8

tArE Tare function
When enabled, the tare function sets the indicator display to zero when the (E) push button is operated in the display mode.
See section 6.9

CodE Security code
Defines a four digit alpha numeric code that must be entered to gain access to the configuration menu. Default code 0000 disables this security function and allows unrestricted access to all conditioning functions.
See section 6.10

rSEt Reset
Contains two sub-functions, ConF which returns the indicator to the default conditions shown in section 6.0, and LtAb which returns the lineariser to the default conditions shown in section 7.4. To prevent accidental use both resets must be confirmed by entering SurE before they will be executed.
See section 6.11

6.2 Indicator function: FunC

This configuration function defines the relationship between the indicator's 4/20mA input current and the indicator's display. Three alternatives are available:

Std	Standard linear relationship
root	Square root extraction
Lin	16 segment adjustable linearisers

To reveal the indicator's existing function select FunC from the configuration menu and press (P). If the function is set as required, press (E) to return to the menu, or press the (▼) or (▲) button to change the setting, followed by the (E) button to return to the configuration menu.

Std Linear
Provides a linear relationship between the 4/20mA indicator input current and the indicator display.

root Square root extraction
Primarily intended to linearise the square law 4/20mA output from differential flowmeters.

For reference, the following table shows the output current from a non-linearised differential flow meter.

% of full flow	Current output mA
2.5	4.01
10.0	4.16
25.0	5.00
50.0	8.00
75.0	13.00
100.0	20.00

When the root function is selected the indicator will display flow in linear units.

Lin 16 segment adjustable linearisers
Enables non-linear variables to be displayed by the indicator in linear engineering units. Use of the linearisers is described in section 7 of this instruction manual.

6.3 Resolution: rESn

This function defines the resolution of the least significant display digit. Decreasing the display resolution can improve the readability of a noisy signal. Select rESn from the menu and press (P) which will reveal the current display resolution. To change the resolution press the (▼) or (▲) button to select 1, 2, 5 or 10 digits, followed by the (E) button to enter the selection and return to the configuration menu.

6.4 Position of the decimal point: dP

A dummy decimal point can be positioned between any of the digits or it may be absent. To position the decimal point select dP from the menu and press P. The decimal point can be moved by pressing the ▼ or ▲ push button. If a decimal point is not required it should be positioned beyond the most or least significant digit. When positioned as required press the E button to enter the selection and return to the configuration menu.

6.5 Calibration using an external current source: CAL

This function enables the zero and span of the indicator to be adjusted using an external calibrated current source. When used with an accurate traceable current source this is the preferred method of calibration.

Zero is the indicator display with 4mA input
Span is the indicator display with 20mA input

To calibrate the indicator select CAL from the configuration menu and press P. The indicator will display ZEro which is a request for a 4mA input current. Adjust the external current calibrator to 4.000mA and again press P which will reveal the existing zero display. The flashing digit of the indicator display can be changed by pressing the ▼ or ▲ buttons, when set as required pressing P will transfer control to the next digit. When all the digits have been adjusted, press E to enter the new zero and return to the ZEro prompt .

Pressing the ▲ button will cause the indicator to display SPAn which is a request for a 20mA input current. Adjust the external current calibrator to 20.000mA and again press P which will reveal the existing span display. The flashing digit of the indicator display can be changed by pressing the ▼ or ▲ buttons, when set as required pressing P will transfer control to the next digit. When all the digits have been adjusted press E to enter the new span and return to the SPAn prompt. Finally press E again to return to the configuration menu.

Notes:

a. The indicator input current must be adjusted to the required value before the zero and span functions are entered by pressing the P button.

b. Indicators may be calibrated at currents other than 4 and 20mA, within the range 3.8 to 21.0mA providing the difference between the two currents is greater than 4mA. If these conditions are not complied with, the indicator displays FAiL and aborts the calibration.

c. If the zero current is greater than the span current the instrument will be reverse acting i.e. an increasing input current will cause the display to decrease.

6.6 Calibration using internal reference: SEt

Using the SEt function the indicator can be calibrated without the need to know the value of the 4/20mA input current, or to disconnect the indicator from the 4/20mA loop.

When using the SEt function the indicator's internal reference is used to simulate a 4mA and 20mA input current.

Zero is the display with a simulated 4mA input
Span is the display with a simulated 20mA input

To calibrate the indicator display select SEt from the configuration menu and press P. The indicator will display ZEro, pressing P again will reveal the existing display at 4mA. The flashing digit can be adjusted by pressing the ▼ or ▲ buttons, when the flashing digit is correct pressing P will transfer control to the next digit. When all the digits have been adjusted, press E to return to the ZEro prompt.

To adjust the display at 20mA, press the ▲ button which will cause the indicator to display SPAn, pressing P will then reveal the indicator's existing display at 20mA. The flashing digit can be adjusted by pressing the ▼ or ▲ buttons, when the flashing digit is correct pressing P will transfer control to the next digit. When all the digits have been adjusted press E to return to the SPAn prompt followed by E to return to the SEt prompt in the configuration menu.

6.7 Bargraph format and calibration: bAr

Only BA324SG indicators have a bargraph.

In addition to a five digit numerical display BA324SG indicators have a 31 segment analogue bargraph which may be configured to start and finish anywhere within the indicator's numerical display range.

To configure the bargraph select bAr from the configuration menu and press P. The indicator will display tYPE, pressing P again will reveal the existing bargraph justification which can be changed to one of the following four or five options using the ▼ or ▲ button:

	Bargraph justification starts from
LEFt	Left end of display
CEntr	Centre of display
rIGHt	Right end of display
oFF	Bargraph disabled

When set as required press E to return to the tYPE sub-function prompt.

The indicator's digital display at which the bargraph starts is defined by the bArLo sub-function which is selected by pressing the ▲ button followed by the P button which will reveal the existing indicator display at which the bargraph starts. The flashing digit can be adjusted by pressing the ▼ or ▲ buttons, when set as required pressing P will transfer control to the next digit. When all the digits have been adjusted, press E to return to the bArLo prompt from which bArHi which defines the finishing point of the bargraph can be selected by pressing the ▲ button. bArHi is adjusted in the same way as bArLo. When set as required, pressing E twice will return the display to the bAr prompt in the configuration menu.

Note: bArLo must be set lower than bArHi , incorrect setting is indicated by the bargraph scale flashing with a single bargraph segment activated.

6.8 Function of the P push button: C--P

When the indicator is in the display mode, operating the P push button will display the input current in milliamps, or the displayed value as a percentage of the difference between the displayed values at 4mA and 20mA inputs.

To check or change the function of the P push button select C--P from the configuration menu and press P to reveal the existing setting. Pressing the ▼ or ▲ button will toggle the setting between 4-20 the current display in milliamps and PC the percentage display. When set as required press E to return to the C--P prompt in the configuration menu.

6.9 Tare function: tArE

The tare function is primarily intended for use with a weighing system. When the indicator is in the display mode and the tare function is activated, pressing the E button for more than three seconds will zero the indicator's digital display and activate the tare annunciator. The BA324SG bargraph remains linked to the digital display when the tare function is activated. Subsequent operation of the E push button for less than 3 seconds will return the indicator to the gross display and deactivate the tare annunciator.

To check or change the tare function select tArE from the configuration menu and press P to reveal the existing setting. Pressing the ▼ or ▲ button will toggle the setting between on and oFF. When set as required press E to return to the tArE prompt in the configuration menu.

6.10 Security code: CodE

Access to the instrument configuration menu may be protected by a four digit security code that must be entered to gain access. New instruments are configured with the default security code 0000 which allows unrestricted access to all configuration functions.

To enter a new security code select CodE from the configuration menu and press P which will cause the indicator to display the existing security code with one digit flashing. The flashing digit can be adjusted using the ▼ or ▲ push buttons, when set as required operating the P button will transfer control to the next digit. When all the digits have been adjusted press E to return to the CodE prompt in the configuration menu. The revised security code will be activated when the indicator is returned to the display mode. Please contact BEKA associates sales department if the security code is lost.

6.11 Reset to factory defaults: rSEt

This function enables the indicator and the lineariser to be quickly returned to the factory default configurations shown in section 6.0.

To reset the indicator or lineariser select rSEt from the configuration menu and press P, the indicator will display one of the reset options ConF or LtAb.

ConF	Resets the indicator to defaults
LtAb	Resets the lineariser to defaults

Using the ▼ or ▲ push button select the required sub-function and press P. To prevent accidental resetting the request must be confirmed by entering SurE. Using the ▲ button set the first flashing digit to 5 and press P to transfer control to the second digit which should be set to u. When SurE has been entered pressing the E button will reset the selected configuration menus and return the display to the rSEt function in the configuration menu.

6.12 Under and over-range

If the numerical display range of the indicator is exceeded, all the decimal points will flash as shown below:

	BA304SG	BA324SG
Underrange	-9.9.9.9	-9.9.9.9.9
Overrange	9.9.9.9	9.9.9.9.9

Although not guaranteed, most indicators will continue to function normally with an input current between 1.8mA and 4mA, at lower currents the instrument will display LPLo before it stops functioning.

Under or over-range of the BA324SG bargraph is indicated by a flashing arrow at the appropriate end of the bargraph.

7. LINEARISER

A sixteen segment, seventeen break-point (0 to 16) lineariser may be selected in the FunC section of the configuration menu. The position of each break-point is fully adjustable so that the slope of the straight line between break-points can be set to compensate for input non-linearity, thus allowing the indicator to display non-linear process variables in linear engineering units. Each break-point must occur at a current greater than the preceding break-point and less than the following break-point, in the range 3.8 to 21.0mA. If this requirement is not observed when configuring the lineariser the indicator will display FAIL and the configuration adjustment which produced the error message will be ignored. Fig 11 shows a typical linearised indicator characteristic.

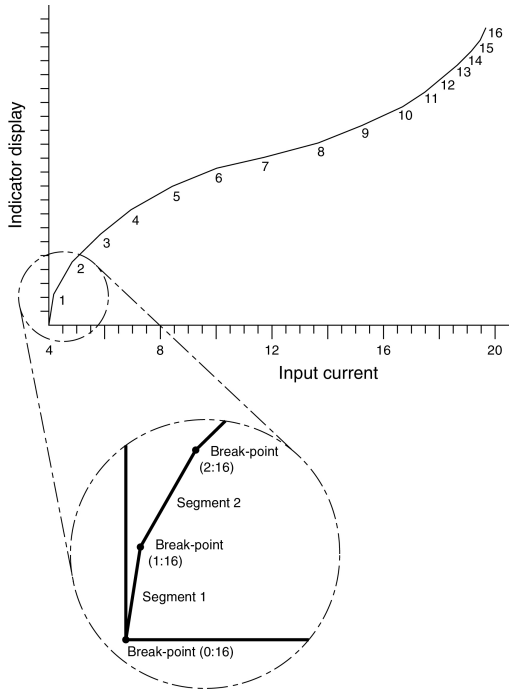

Fig 11 shows a typical linearising characteristic

Selecting Lin in the FunC section of the configuration menu activates the lineariser, this does not change the configuration menu shown in Fig 10, but the CAL and SET functions are extended as shown in Fig 12. As with a linear indicator, calibration of the lineariser may be performed with an external current source using the CAL function, or with the internal reference using the SET function.

The lineariser calibration is retained irrespective of how the indicator function FunC is subsequently changed. It is therefore possible to select and deselect the lineariser without having to reconfigure it each time.

The lineariser calibration may be reset to the factory default settings without changing the indicator configure using the LtAb function described in section 6.11.

7.1 Lineariser calibration using an external current source.

This method allows direct calibration of the lineariser with an external current source and is the preferred method when traceability is required. If the exact system non-linearity is unknown, this method also allows direct calibration from the variable to be displayed. e.g. the output from a level sensor in an irregular tank may be displayed in linear volumetric units by filling the tank with known incremental volumes and calibrating the indicator to display the sum of the increments at each break-point.

The number of break-point required should first be entered using the Add and dEL functions. In both these sub-functions the indicator initially displays the current break-point and the total number of break-points being used as shown below.



current break-point | total number of break-points

Display	Summary of function
Add	**Add a break-point** Adds a new break-point before the displayed break-point. The calibration of existing break-points is not changed, but the identification number of all subsequent break-points is increased by one.
dEL	**Remove a break-point** Removes the displayed break-point and joins the preceding break-point to the following break-point with a straight line. The identification number of all subsequent break-points is decreased by one.

To add a break-point use the ▼ or ▲ button to select CAL from the configuration menu and press P which will result in the Add sub-function prompt being displayed. To enter the sub-function press P which will reveal the current break-point and the total number of break-points which have already been entered. When adding a break-point the insertion position can be selected using the ▼ or ▲ push button followed by P push button to insert the additional break-point. In previously uncalibrated linearisers each new break-point should be added in front of the highest existing break-point, if this sequence is not followed a FAIL message will occur in the PtS function. See example in section 7.1.1.

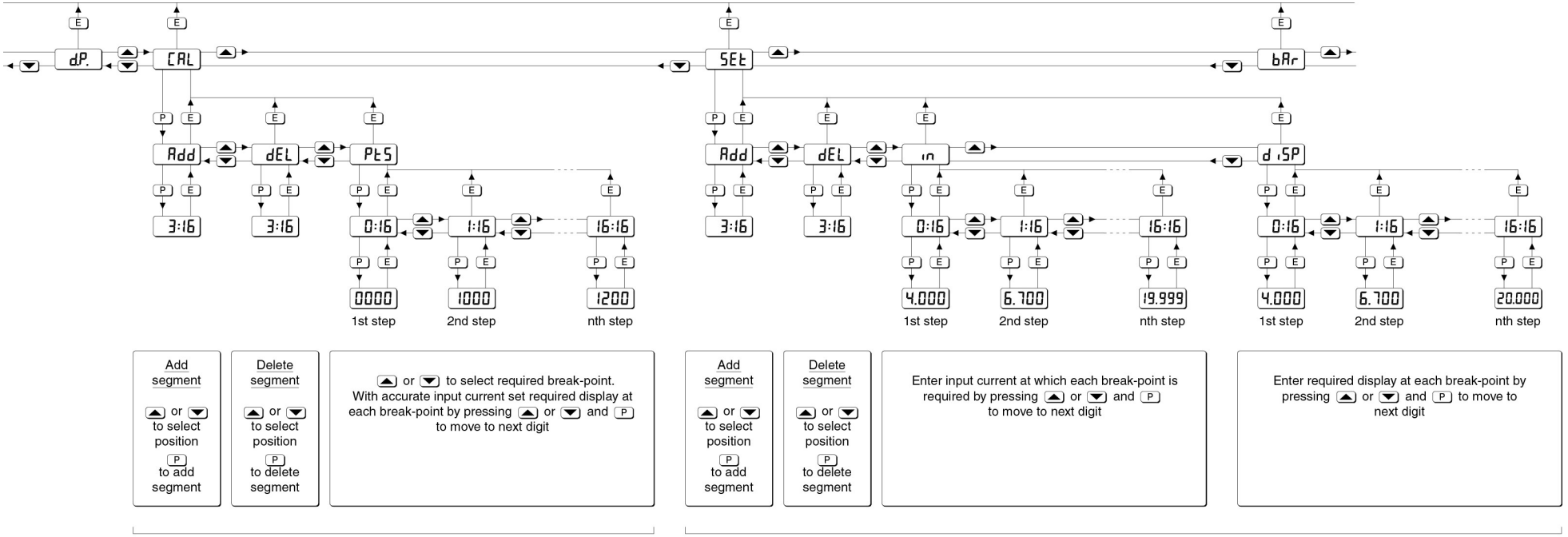

Each break-point must occur at an input current greater than the preceding break-point and less than the following break-point, in the range 3.8 to 21.0 mA

Fig 12 Extension of CAL and SEt functions for lineariser configuration

The delete break-point sub-function dEL operates in exactly the same way as the Add sub-function described above. Once within the dEL sub-function each time the P button is pressed a break-point is removed. When deleting a break-point from a calibrated indicator, the break-point to be deleted can be selected using the ▼ or ▲ push button. The minimum number of break-points is 2, break-points 0:1 and 1:1.

When the required number of linearising break-points has been entered, return to the linearisation sub-menu by pressing E. The indicator will display the Add or dEL prompt depending upon the last function used. Using the PtS sub-function the input current at which each break-point occurs and the corresponding indicator display may now be defined.

Using the ▼ or ▲ button select the PtS function in the sub-menu and press P to enter the function which will display the first break-point 0:n, where n is the total number of linearising break-points entered - see Fig 12. The selected linearising break-point can be changed using the ▼ or ▲ buttons. When the required linearising break-point has been selected set the indicator input current to the exact value at which the break-point is required and press P*. Using the ▼ and ▲ buttons and the P button to move between digits, enter the required indicator display at this break-point. When set as required, press the E push button to enter the required indicator display and return to the sub-menu from which the next break-point can be selected.

When all the break-points have been calibrated pressing E twice will return the indicator to the 'CAL' function in the configuration menu.

Note: * The indicator input current must be adjusted to the required value before the P button is operated to enter the required indicator display.

Error message

If during calibration the indicator displays a FAiL error message the current at which the selected break-point is being set is not above the preceding break-point or is not below the following break-point.

7.1.1 Example
Adding break-points to a new indicator

When adding break-points to a new indicator, or to a linearisers following resetting to the factory defaults using the rSEt function described in section 6.11, each additional break-point should be added before the highest existing breakpoint. The first additional break-point should be added before the default break-point 1:1 which will result in a display of 1:2. If more new break-points are required, using the ▲ button select the new highest break-point 2:2 and add the second additional break-point by operating the P push button which will result in a display of 2:3. Repeat the sequence until the required number of break-points has been entered.

The input current at which each break-point occurs and the corresponding indicator display may now be entered as described above.

7.2 Lineariser calibration using the internal reference.

The SEt function enables the lineariser to be calibrated without the need for an accurate external current source. Throughout the calibration the indicator input current may be any value between 4 and 20mA.

The SEt functions contains four sub-functions.

Display	Summary of function
Add	Add a break-point Adds a new break-point before the displayed break-point. The calibration of existing break-points is not changed, but the identification number of all subsequent break-points is increased by one.
dEL	Remove a break-point Removes the displayed break-point and joins the preceding segment to the following segment with a straight line. The identification number of all subsequent break-points is decreased by one.
I n	Defines the current at which break-point occurs. Enables the required current at each break-point to be defined without having to input an accurate input current to the indicator.
d1 SP	Defines indicator display at break-point. Enables the indicator display at each break-point to be defined.

The number of break-points required should first be entered using the Add and dEL sub-functions. In both these sub-functions the indicator initially displays the current break-point and the total number of break-points being used as shown below.

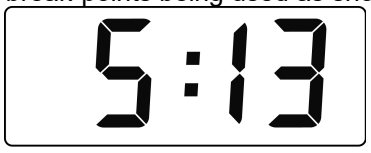

current break-point — total number of break-points

To add a break-point using the ▼ or ▲ button select SEt from the configuration menu and press P which will result in the Add sub-function prompt

being displayed. To enter the sub-function press (P) which will reveal the current break-point and the total number of break-points which have already been entered. When adding a break-point the insertion position can be selected using the (▼) or (▲) push buttons followed by (P) push button to insert the additional break-point. In previously uncalibrated linearisers each new break-point should be added in front of the highest existing break-point, if this sequence is not followed a FAIL message will occur when the break-points are calibrated. See example in section 7.2.1.

The delete a break-point, sub-function dEL operates in exactly the same way as the Add sub-function described above. Once within the dEL function each time the (P) button is pressed a break-point is removed. When deleting a break-point from a calibrated indicator, the break-point to be deleted can be selected using the (▼) or (▲) push button. The minimum number of break-points is 2, break-points 0:1 and 1:1.

When the required number of linearising break-points has been entered, return to the linearisation sub-menu by pressing (E). The indicator will display the Add or dEL prompt depending upon the last sub-function used. The indicator input current and corresponding indicator display at each break-point, which is the segment finishing point as shown in Fig 11, can now be entered using the In and di SP sub-functions.

Using the (▼) or (▲) button select In from the sub-menu and press (P) which will reveal the starting point for the first segment 0:n, where n is the total number of break-points entered. Press (P) and use the (▼) and (▲) buttons and the (P) button to move between digits, to enter the input current in milliamps at which the first break-point is required, usually 4.000mA. When set as required, press (E) to return to the 0:n prompt from which the next break-point can be selected using the (▼) and (▲) buttons. When the required break-point has been selected press (P) and enter the indicator input current at which this break-point is required using the (▼) and (▲) buttons and the (P) button to move between digits. Repeat this procedure until the indicator input current at all the break-points has been defined and then return to the In sub-function by pressing the (E) button.

The corresponding indicator display at each of the break-points can now be defined using the di SP sub-function. Using the (▼) and (▲) buttons select the di SP sub-function and press (P) which will reveal the starting point for the first break-point 0:n, where n is the total number of break-points entered.

Press (P) and use the (▼) and (▲) buttons and the (P) button to move between digits, to enter the required indicator display at the first break-point. When set as required, press (E) to return to the 0:n prompt from which the next break-point can be selected using the (▼) or (▲) button. When the required break-point has been selected press (P) and set the required indicator display at this break-point.

Repeat this procedure until the indicator display at all the break-points has been defined and then return to the SEt function in the configuration menu by pressing the (E) button twice.

Error message

If during calibration the indicator displays a FAIL error message the current at which the selected break-point is being set is not above the preceding break-point or is not below the following break-point.

7.2.1 Example
Adding break-points to a new indicator

When adding break-points to a new indicator, or to a linearisers following resetting to the factory defaults using the rSEt function described in section 6.11, each additional break-point should be added before the highest existing breakpoint. The first additional break-point should be added before the default break-point 1:1 which will result in a display of 1:2. If more new break-points are required, using the (▲) button select the new highest break-point 2:2 and add the second additional break-point by operating the (P) push button which will result in a display of 2:3. Repeat the sequence until the required number of break-points has been entered.

7.3 Under and over-range

The linearisers does not change the under and over-range indication described in section 6.12. At input currents below that specified for the first break-point 0:n, the indicator will continue to use the specified slope of the first segment.

At input currents above that specified for the last break-point n:n, the indicator will continue to use the slope specified for the last linearisers segment.

7.4 Linearisers default configuration

When the linearisers is reset to the factory defaults using the LtAb function described in section 6.11, the defaults conditions are:

			Indicator display BA304SG	Indicator display BA324SG
First break-point	0 :1	4mA	0.0	0.00
Second break-point	1 :1	20mA	100.0	100.00

8. MAINTENANCE

8.1 Fault finding during commissioning

If an indicator fails to function during commissioning the following procedure should be followed:

Symptom	Cause	Solution
No display	Incorrect wiring	Check wiring There should be 1.5V to 2.9V between terminals 1 & 3 with terminal 1 positive. With an optional backlight there should be 3.3V to 5.6V between terminals 1 & 3 with terminal 1 positive.
No display 0V between terminals 1 & 3.	Incorrect wiring or no power supply	Check supply voltage and voltage drop caused by all the instruments in the loop.
All decimal points flashing.	Overrange or underrange if -ve sign is displayed.	Recalibrate the numerical display.
Unstable display	4/20mA input is noisy.	Eliminate ripple on 4/20mA power supply and/or decrease indicator resolution.
Indicator displays LPLo	4/20mA input is too low.	Measure 4/20mA current and ensure that it is above 3mA.
Unable to enter configuration menu.	Incorrect security code entered.	Enter correct security code, or contact BEKA if the code has been lost.

8.2 Fault finding after commissioning

ENSURE PLANT SAFETY BEFORE STARTING MAINTENANCE

The BA304SG and BA324SG are Ex eb and Ex tb certified indicators. The instrument enclosure should only be opened when the indicator is de-energised, or a gas/dust clearance certificate has been issued.

If an indicator fails after it has been functioning correctly, follow the procedure shown in section 8.1. If this does not reveal the cause of the fault, it is recommended that the instrument is replaced.

8.3 Servicing

BA304SG and BA324SG loop powered indicators are interchangeable. A single spare instrument assembly may quickly be recalibrated to replace any instrument that is damaged or fails. No attempt should be made to repair instruments at component level.

We recommend that faulty instruments are returned to BEKA associates or to your local BEKA agent for repair.

8.4 Routine maintenance

The mechanical condition of the instrument and electrical calibration should be regularly checked. The interval between inspections depends upon environmental conditions.

8.5 Guarantee

Indicators which fail within the guarantee period should be returned to BEKA associates or our local agent. It is helpful if a brief description of the fault symptoms is provided.

8.6 Customer comments

BEKA associates is always pleased to receive comments from customers about our products and services. All communications are acknowledged and whenever possible, suggestions are implemented.

9. ACCESSORIES

9.1 Units of measurement & instrument identification.

New indicators can be supplied with an internal printed scale card showing the units of measurement and tag information specified when the instrument was ordered. If this information was not supplied a blank scale card will be supplied which can easily be marked on-site with a dry transfer or a permanent marker.

Custom printed scale cards are available as accessories and may be easily fitted as shown in section 5.7 of this manual.

All models can also be supplied with a blank or custom laser engraved stainless steel legend plate - see Fig 7. The plate, which after installation is visible from the front of the instrument, is supplied loose with two fixing screws for securing it to the rear of the instrument's back-box. This plate can typically accommodate:

1 row of 5 alphanumeric characters 10mm high

or 1 row of 6 alphanumeric characters 7mm high

or 2 rows of 10 alphanumeric characters 5mm high

9.2 Display backlight

Both models can be supplied with a factory fitted loop powered backlight which produces green background illumination enabling the display to be read at night or in poor lighting conditions. When fitted the indicator's voltage drop at 20mA increases from 2.9V to 5.6V.

9.3 Pipe mounting kit

The BA393G is a 316 stainless steel kit which will secure an indicator to a horizontal or vertical pipe with an outside diameter between 40 and 73mm.

Detailed assembly instructions are supplied with each BA393G pipe mounting kit.

9.4 Panel mounting kit

The BA394G panel mounting kit, which consists of two 316 stainless steel brackets, will secure an indicator into a panel aperture. The kit does not seal the joint between the panel and the instrument and is intended for mounting an indicator onto an open panel.

APPENDIX 1

Dust Certification

A1.0 Ex tb dust certification

In addition to IECEx, ATEX & UKEX certification permitting installation in explosive gas atmospheres, which is described in the main section of this instruction manual, both models have IECEx, ATEX & UKEX dust ignition protection by enclosure Ex tb.

Dust ignition protection by enclosure Ex tb is a type of explosion protection in which electrical equipment is mounted in an enclosure that provides dust ingress protection, and limits the enclosure surface temperature allowing installation in Zones 1 and 2.

A1.1 Zones, and Maximum Surface Temperature

Both indicators have Ex ib mb tb IIIC T80°C Db -40ºC ≤ Ta ≤ +60ºC certification. When connected to a suitable system the indicators may be installed in:

Zone 21	explosive atmosphere in the form of a cloud of combustible dust in air is likely to occur occasionally in normal operation.
Zone 22	explosive atmosphere in the form of a cloud of combustible dust in air is not likely to occur in normal operation, but if it does occur, will only persist for a short period.

Be used with dust in subdivisions:

IIIA	combustible flyings
IIIB	non-conductive dust
IIIC	conductive dust

Having a Minimum Ignition Temperature of:

Dust cloud	120°C
Dust layer on indicator up to 5mm thick	155°C
Dust layer on indicator over 5mm thick.	Refer to EN 60079-14

At an ambient temperature between -40 and +60°C

Note: Types of explosion protection on all certificates are listed in alphabetical order.

A1.2 Installation and maintenance

The installation requirement described in this manual for use in potentially explosive gas atmospheres also apply when the indicators are installed in a potentially combustible dust atmosphere.

The instrument enclosure should only be opened when the indicator is de-energised and dust can not enter the instrument enclosure. Before replacing the indicator assembly the sealing gasket should be inspected to ensure that it is undamaged and free from foreign bodies.

It is good practice to prevent dust accumulating on the indicator enclosure. If this can not be avoided, care should be taken to ensure that the layer thickness does not exceed 5mm for dusts having a minimum ignition temperature of 155°C.

A1.3 Cable glands and conduit fittings

Both back-box cable entries have M20 x 1.5 threads. The right hand entry is fitted with an Ex e and Ex t certified stopping plug and the left hand entry with a temporary plug to prevent the ingress of dust and dirt during transportation.

Certified Ex t plastic or metallic cable glands or conduit entries should be used. If two screened cables are used, the screens of each cable should be joined together using indicator terminals 5 and 6.

APPENDIX 2

ETL & cETL certification for installations in USA and Canada.

A2.1 cETL Mark

For installations in the USA and Canada, all the models have ETL and cETL Ex eb increased safety approval, **They do not have ETL and cETL Ex tb dust certification.** Control Number 4008610. Copies of the *Authorisation to Mark* may be downloaded from the BEKA associates website www.beka.co.uk, or requested from the BEKA associates sales office.

A2.1 Increased safety Ex eb approval

Installations in the USA and Canada must comply with BEKA associates Control Drawing CI300-69, which is attached to this appendix.

The ETL safety parameters are the same as the IECEx and ATEX parameters. The systems shown in sections 4 and 5 of this manual may therefore also be used for US and Canadian installations subject to, compliance with the local codes of practice and the BEKA Control Drawing CI300-69.

A 2.2 ETL and cETL intrinsic safety codes

USA - Zone classification

Class I Zone 1 AEx eb ib mb IIC T5 Gc
-40ºC ≤ Ta ≤ 60ºC

Canadian - Zone classification

AEx eb ib mb IIC T5 Gc
-40ºC ≤ Ta ≤ 60ºC

Issue	Date	Modification	Ckd.	Appd.
1	27.03.2026	See sheet 2		

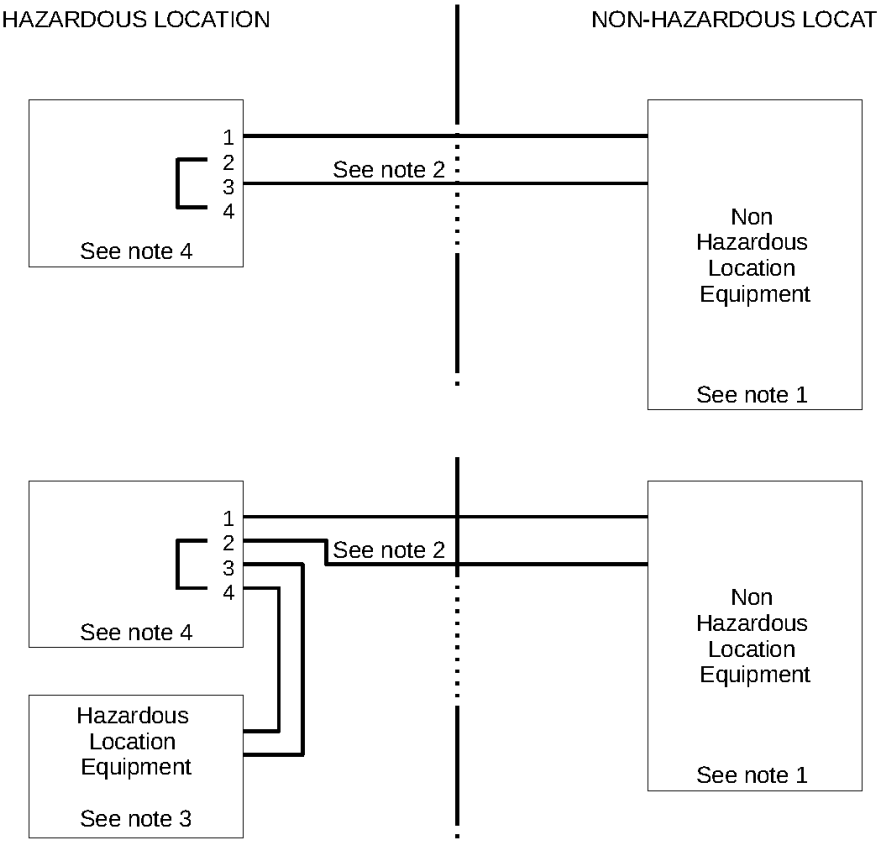

Notes:

1. The equipment shall be supplied from a SELV or PELV supply or from adequately approved supply providing double or reinforced insulation as required by IEC 60079-14 standard.
2. Field wiring installations shall be in accordance with the National Electrical Code ANSI/NFPA 70. Installations in Canada shall be be in accordance with the Canadian Electrical Code C22.2.
3. Hazardous location equipment shall be NRTL Approved Ex d, Ex e, Ex p or Ex m Apparatus. For Canadian installations hazardous location equipment shall be NRTL or CSA Approved Apparatus.
4. Loop powered indicators with model numbers and coding as shown in the table below:

Models (*)	Zones	Ambient Temperature
BA304SG BA324SG BA354SG	Class I Zone 1 AEx eb ib mb IIC T5 Gc Ex eb ib mb IIC T5 Gb	-40°C ≤ Ta ≤ +60°C

(*) Models in a Stainless Steel enclosure have model numbers with an “-SS” suffix i.e. BA3X4SG-SS

5. Ratings:

   Terminals 1 to 4

   Maximum input voltage is U_N=30V d.c.

BEKA associates *Hitchin, England* *Company Confidential* *Copyright reserved*	Title **ETL Control Drawing for BA304SG and BA324SG Digital Indicators and BA354SG Rate Totaliser**	Drawn OL	Checked OL	Scale N/A
		Dwg. No: CI300-69 Sheet 1 of 1		