BA326C
Intrinsically safe loop-powered analogue bargraph and digital indicator

Issue 16
For instrument with serial numbers above 071235/01/001

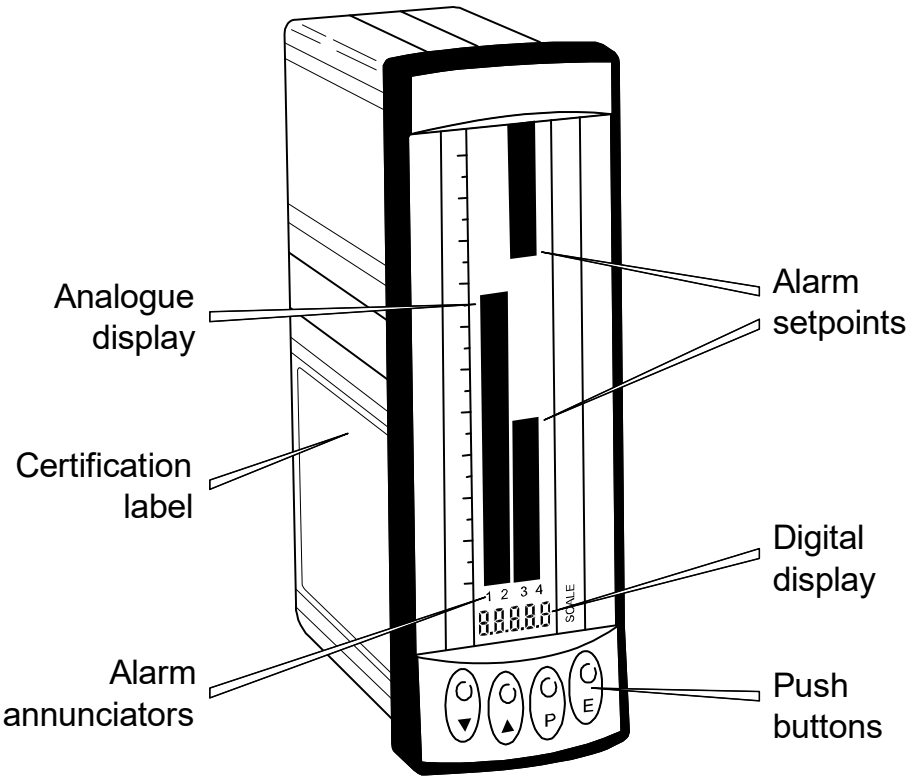

Issue: 16
17th October 2025

1. Description

2. Operation
2.1 Controls

3. Intrinsic Safety Certification
3.1 ATEX & UKEX certification
3.2 4/20mA input
3.3 Zones, gas groups & T rating
3.4 Certification label information

4. System Design for Hazardous Areas ATEX certification
4.1 Transmitter loops
4.2 Remote indication

5. Installation
5.1 Location
5.2 Installation procedure
5.3 EMC

6. Programming and Calibration
6.1 Summary of programmable functions.
6.2 Root extractor
6.3 Digital display
6.4 Digital resolution
6.5 Dummy trailing zero
6.6 Position of decimal point
6.7 Bargraph display
6.8 Calibration using an external current source.
6.9 Calibration using internal references
6.10 Conditioning sub-menu
6.10.1 AC rejection
6.10.2 Calibration of internal references.
6.11 Function of the *P* push button
6.12 Null display function
6.13 Security code
6.14 Over and under-range

7. Calibration Examples
7.1 Using an external current source
7.2 Using the internal references

8. Maintenance
8.1 Fault finding during commissioning
8.2 Fault finding after commissioning
8.3 Servicing
8.4 Routine maintenance
8.5 Guarantee
8.6 Customer comments

9. Accessories
9.1 Units of measurement and instrument identification.
9.2 Alarms
9.2.1 Solid state output
9.2.2 Intrinsic safety
9.2.3 Programming and adjustment
9.2.4 Alarm enable
9.2.5 Setpoint adjustment
9.2.6 Alarm function
9.2.7 Alarm output status
9.2.8 Hysteresis
9.2.9 Alarm delay
9.2.10 Alarm silence time
9.2.11 Display alarm identification
9.2.12 Access setpoint
9.2.13 Adjusting alarm setpoints from display mode.

9.3 Lineariser
9.3.1 Calibration using an external current source.
9.3.2 Calibration using internal references.

9.4 Display backlight

Appendix 1
IECEx certification

Appendix 2
Increasing the indicator's voltage drop

Appendix 3
EU Declaration of Conformity

The BA326C is CE marked to show compliance with the European Explosive Atmospheres Directive 2014/34/EU and the European EMC Directive 2014/30/EU.
They are also UKCA marked to show compliance with UK statutory requirements Equipment and Protective Systems Intended for Use in Potentially Explosive Atmospheres Regulations UKSI 2016:1107 (as amended) and with the Electromagnetic Compatibility Regulations UKSI 2016:1091 (as amended).

1. DESCRIPTION

The BA326C is an intrinsically safe, panel mounting, loop powered 4/20mA combined bargraph and digital indicator. The one hundred segment bargraph provides a quick indication of input current magnitude and trend, supported by an accurate digital display which may be calibrated in engineering units.

The BA326C is a second generation instrument which, although having additional functions, remains compatible with the original BA326B.

The main application of the BA326C is to display a measured variable or control signal in a hazardous process area. The zero and span of the digital display are independently adjustable so that the indicator may be calibrated to display any 4/20mA variable in engineering units. The analogue display shows the 4/20mA input on a single or double 100 segment bargraph which may be fitted with a custom scale to indicate the units of measurement. Both the bargraph and digital display may be offset to indicate deviation from a specified input current.

The BA326C and the optional accessories have IECEx, ATEX & UKEX intrinsic safety certification for use in gas hazardous areas.

The certificates specify that under fault conditions the output voltage, current and power at input terminals 1 and 3 will not exceed those specified for *simple apparatus* in EN 60079-11.

This instruction manual describes ATEX & UKEX certification for BA326C instruments with serial numbers above 071235/01/001. International IECEx certification is described in Appendix 1.

BA326C indicators with serial numbers below 071235/01/001 have FM approval.

The BA326C indicator is housed in a robust 144 x 48 panel mounting DIN enclosure with an IP65 sealed front.

2. OPERATION

Fig 1 shows a simplified block diagram of a BA326C. The 4/20mA input current flows through resistor R1 and forward biased diode D1. The voltage developed across D1, which is relatively constant, is multiplied by a switch mode power supply and used to power the instrument. The voltage developed across R1, which is proportional to the 4/20mA input current, provides the input signal for the analogue to digital converter.

Each time a 4/20mA current is applied to the instrument, initialisation is performed. After a short delay the following display sequence occurs:

Firmware	In form x.xx version displayed.
-1.8.8.8.	Display test in which all segments of the display are activated.
Input current display in engineering units.	Using calibration information stored in instrument memory.

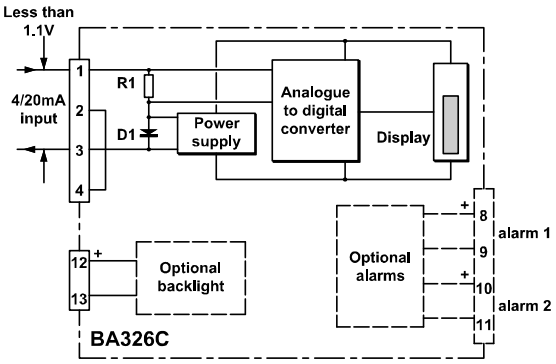

Fig 1 Simplified block diagram of BA326C

2.1 Controls

The BA326C is controlled and calibrated via four front panel push button. In the display mode i.e. when the instrument is displaying a 4/20mA input current, these buttons have the following functions:

P While this button is pushed the digital display will show the input current in mA, or as a percentage of the instrument span depending upon how the instrument has been programmed. When the button is released the normal display in engineering units will return. The function of this push button is modified when either alarm is enabled.

Down While this button is pushed the digital display will show the calibration with a 4mA input. When released the normal display in engineering units will return.

Up While this button is pushed the digital display will show the calibration with a 20mA input. When released the normal displays in engineering units will return.

E No function in the display mode.

3. INTRINSIC SAFETY CERTIFICATION

3.1 ATEX & UKEX certification

The BA326C has ATEX and UKEX intrinsic safety certification for use in Group II, Category 1G, gas atmospheres, Ex ia IIC T5 Ga. The instrument carries both the EU Community CE Mark and the UKCA mark. Subject to local codes of practice, it may be installed in any of the European Economic Area (EEA) member countries and in the UK.

This manual describes installations which conform with EN 60079-14 *Electrical installations design, selection and erection*. When designing systems the local Code of Practice should be consulted.

3.2 4/20mA input

In Europe, sources of energy which do not generate more than 1.5V; 100mA and 25mW are for intrinsic safety purposes considered to be *simple apparatus*.

Although the BA326C indicator does not itself comply with the requirements for *simple apparatus*, the intrinsic safety certificates state that under fault conditions the output voltage, current and power at the 4/20mA input terminals 1 and 3 will not exceed those specified for *simple apparatus*. This allows the BA326C to be connected into to any intrinsically safe circuit protected by a Zener barrier of galvanic isolator providing the output parameters of the circuit do not exceed:

Uo	28V dc
Io	200mA
Po	0.84W

The maximum equivalent capacitance and inductance between the two 4/20mA input terminals is:

Ci	=	20nF
Li	=	10µH

To determine the maximum permissible cable parameters these figures must be subtracted from the maximum cable capacitance and inductance permitted by the Zener barrier, galvanic isolator or certified associated apparatus powering the BA326C indicator.

3.3 Zones, gas groups and T rating

The BA326C has been certified Ex ia IIC T5 Ga. When connected to a suitable system the indicator may be installed in:

Zone 0	explosive gas air mixture continuously present.
Zone 1	explosive gas air mixture likely to occur in normal operation.
Zone 2	explosive gas air mixture not likely to occur, and if it does will only exist for a short time.

Be used with gases in groups:

Group	A	propane
Group	B	ethylene
Group	C	hydrogen

Having a temperature classification of:

T1	450°C
T2	300°C
T3	200°C
T4	135°C
T5	100°C

This allows the BA326C to be installed in all Zones and to be used with most common industrial gases.

The BA326C intrinsic safety certificate numbers have an X suffix indicating that special conditions for safe use apply when installed in Zone 0. These are explained below.

CAUTIION installation in Zone 0

When installed in a Zone 0 potentially explosive atmosphere requiring apparatus of Category 1G, the indicator shall be installed such that even in the event of rare incidents, an ignition source due to impact or friction between the aluminium enclosure at the rear of the instrument mounting panel and iron/ steel is excluded.

3.4 Certification label information

The certification label is fitted into a recess on the side of the instrument enclosure. It shows the IECEx, ATEX & UKEX certification information, year of manufacture and the instrument serial number. BEKA associates name and address are also shown. Non European certification information may also be included.



BA326 Label

4. SYSTEM DESIGN FOR HAZARDOUS AREAS ATEX CERTIFICATION

4.1 Transmitter loops

A BA326C indicator may be connected in series with almost any intrinsically safe 4/20mA current loop and calibrated to display the measured variable or control signal in engineering units. There are two basic design requirements:

1. The intrinsic safety output parameters of the 4/20mA loop, which are defined by the Zener barrier(s) or galvanic isolator, must be less than:

Uo	28V dc
Io	200mA
Po	0.84W

2. The loop must be able to tolerate the additional 1.1V required to operate the indicator (increases to 1.2V at -20ºC).

Fig 2 illustrates a typical application in which a BA326C is connected in series with a 2-wire transmitter protected by a Zener barrier.

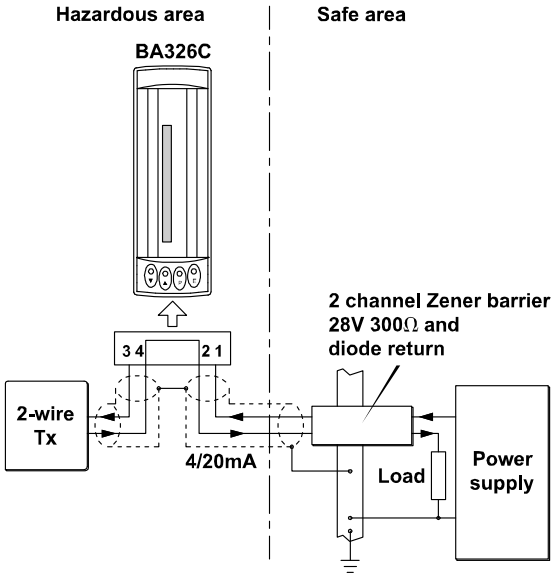

Fig 2 BA326C in a transmitter loop

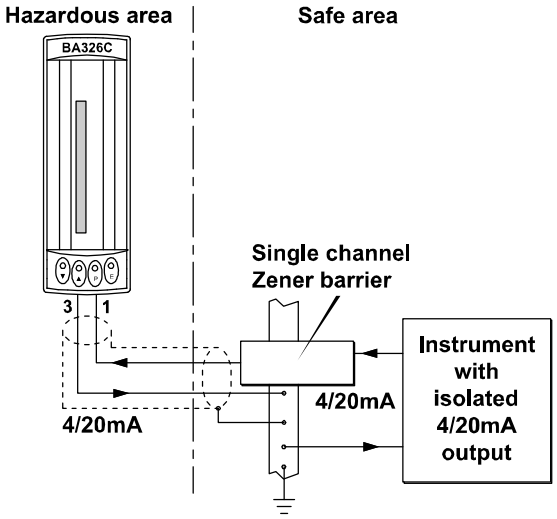

Fig 3A Simplest circuit with one side of 4/20mA current loop connected to earth.

4.2 Remote indication

A BA326C may be driven via an intrinsically safe interface from a 4/20mA safe area signal to provide a remote indication within a hazardous area. The type of interface is not critical, either a Zener barrier or a galvanic isolator may be used, providing that the BA326C Ui, Ii and Pi are not exceed.

If one side of the 4/20mA current loop may be earthed, a single channel Zener barrier provides the lowest cost protection. If the 4/20mA signal is not isolated, then two Zener barriers, a two channel Zener barrier or a galvanic isolator must be used.

When the hazard is a IIC gas, and two single channel Zener barriers or a two channel Zener barrier are used, only one barrier or channel may be a 28V; 93mA; 300ohm device. Again it is necessary to ensure that the voltage capability of the 4/20mA signal is sufficient to drive the indicator plus the voltage drop introduced by the intrinsically safe interface. Figs 3A, 3B and 3C show the alternative circuits which may be used.

The BA326C has a very low 4/20mA voltage drop of less than 1.1V. Some galvanic isolators, such as those with short and open circuit detection, may not function correctly with such a low load. If the chosen isolator requires a load greater than 1.1V, this can be achieved by connecting a resistor in series with the 4/20mA supply as shown in Appendix 2

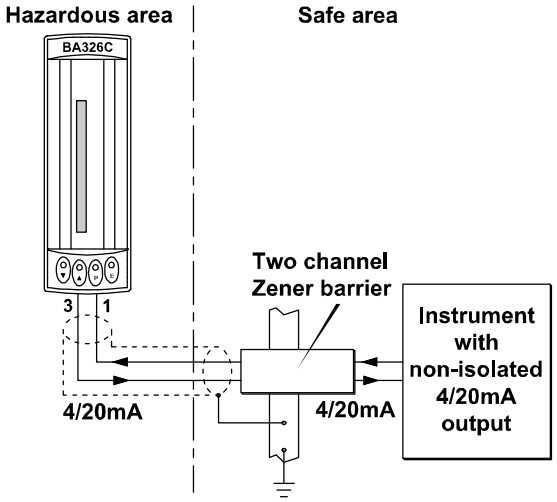

Fig 3B Two Zener barrier channels are required if the 4/20mA current loop can not be earthed at the barrier busbar.

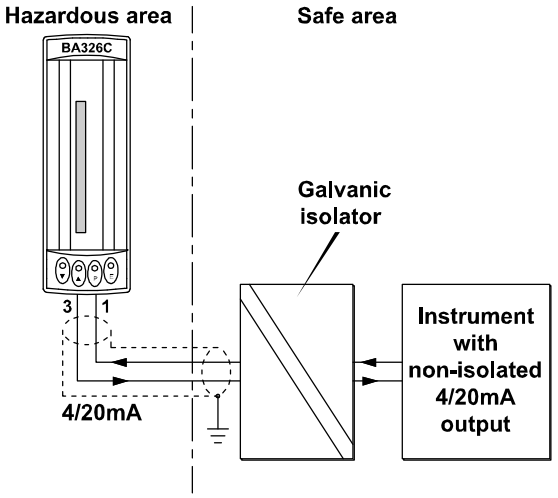

Fig 3C Galvanic isolator can be used with any 4/20mA current loop.

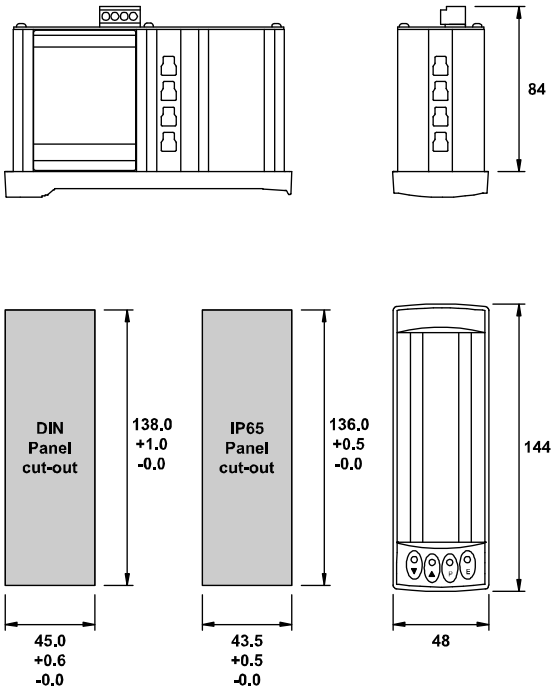

Fig 4 BA326C dimensions

5. INSTALLATION

5.1 Location

The BA326C indicator is housed in a robust aluminium enclosure with an armoured glass window surrounded by a Noryl bezel. The front of the instrument provides IP65 protection, and a gasket seals the joint between the instrument enclosure and the panel. The instrument may be installed in any panel providing the environmental limits shown in the specification are not exceeded.

Fig 4 shows the overall dimensions of the BA326C and panel cut-out. To achieve an IP65 seal between the instrument enclosure and the panel the smaller cut-out must be used and the instrument secured with four mounting clips.

The BA326C liquid crystal display has maximum contrast when viewed from directly ahead and slightly below the centre line of the instrument. For reflective displays there is very little degradation of contrast when viewed from above the centre line, but slight degradation may be noticeable when the instrument is fitted with a backlight.

5.2 Installation Procedure

Fig 5 illustrates the instrument installation procedure.

a. Insert the BA326C into the instrument panel from the front of the panel.

b. Fix panel mounting clips to the sides of the BA326C and tighten until the instrument is secure - see Fig 5. Recommended torque 22cNm (1.95 lbf in) **Do not over tighten**. If an IP65 seal is required between the enclosure and the instrument panel, four panel mounting clips must be used.

c. Connect the panel wiring to the rear terminal block(s) as shown in Fig 5. To simplify installation the terminals are removable so that the wiring can be completed before the instrument is installed.

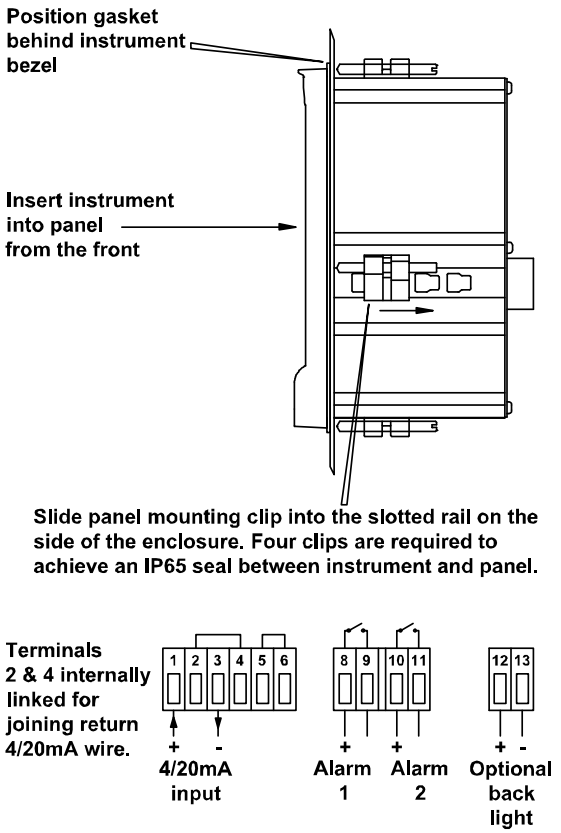

Fig 5 Installation and terminal connections

5.3 EMC

The BA326C complies with the requirements of the European EMC Directive 2014/30/EU. For specified immunity all wiring should be in screened twisted pairs, with the screens earthed in the safe area. The indicator enclosure may be earthed locally by putting a tag under one of the rear panel fixing screws.

6. PROGRAMMING & CALIBRATION

The BA326C is programmed and calibrated via four front panel push buttons. All the programming functions are contained in an easy to use menu which is shown diagramatically in Fig 6. Each function is summarised in section 6.1 which includes references to more detailed information. Although this simple menu driven system enables most adjustments to be made without repeated reference to this manual, it is recommend that at least the summary of the programmable functions in section 6.1 is read before attempting programming or recalibration.

When the indicator is fitted with linearisation, the basic menu is expanded to include additional functions. All the optional accessories are described in section 9 of this manual.

Throughout this manual push buttons are shown in italics e.g. *P* or *Up* push button, and legends displayed by the indicator are shown within inverted commas e.g. 'CAL' and ' ALr2'.

Access to the programme menu is obtained by operating the *P* and *E* push buttons simultaneously. If the instrument is not protected by a security code the first parameter 'root' will be displayed. If a security code other than the default code 0000 has already been entered, the indicator will display 'COdE'. Press *P* to clear this prompt and enter the security code for the instrument using the *Up*, *Down* and *P* push buttons. If the correct code has been entered pressing *E* will cause the first parameter 'root' to be displayed. If an incorrect code or no entry is made the indicator will return to the display mode.

Once within the programme menu the required parameter can be reached by scrolling through the main menu using the *Up* and *Down* pushbuttons as shown in Fig 6. When returning to the display mode following recalibration or changes to any parameters, the indicator will display circulating minus signs for a few seconds while the new information is stored in permanent memory.

All new BA326C indicators are supplied calibrated as requested at the time of ordering. If calibration is not requested, the digital indicator will be calibrated to display 0.00 to 100.00 for 4 to 20mA input.

6.1 Summary of programmable functions

This section summarises all of the programmable functions and when read with Fig 6 provides sufficient information to condition and calibrate the indicator. A cross-reference to a more detailed description is given for each function.

Summary of Programmable Functions

Display	Description of function
'root'	**Square root extractor** Turns the square root extractor for linearising the output from differential flowmeters 'On' or 'OFF'. See section 6.2
'dSPL'	**Digital display** Turns the 4½ digit display 'On' or 'OFF'. See section 6.3
'rESn'	**Display resolution & dummy zero** Selects the resolution of the least significant display digit. May be set to 1, 2, 5 or 10 digits. See section 6.4
'dZErO'	**Dummy trailing zero** Activates a dummy zero after the 4½ digit display so that larger number may be displayed. See section 6.5
'd.P.'	**Decimal point** Positions a dummy decimal point between any of the digits or turns it off. See section 6.6
'bAr'	**Bargraph display** Selects a column or single segment display, and defines whether the input current is displayed on the left hand or on both 100 segment bargraphs. See section 6.7
'CAL'	**Calibration of displays using external current source.** Enables the zero and span of the digital indicator to be adjusted using an external current source such as a calibrator. The analogue bargraph is linked to the digital display and is automatically calibrated at the same time. When performed with an accurate traceable current source, this is the preferred method of calibration. See section 6.8

Display	Description of function
'SEt'	**Calibration of display using internal references.** Enables the zero and span of the digital indicator to be adjusted without the need for an accurate input current or disconnection from the 4/20mA loop. The analogue bargraph is linked to the digital display and is automatically calibrated at the same time. See section 6.9
'Cond'	**Indicator conditioning** This function provides access to a password protected sub-menu enabling the internal references to be calibrated, and the mains (line) frequency rejection to be selected. See section 6.10 **CAUTION** **Do not attempt to change the frequency of the mains (line) filter frequency or recalibrate the internal references without reading section 6.10 of this manual** **'FrE' Frequency rejection** Defines the mains (line) frequency at which the indicator has maximum ac rejection. 50 or 60Hz may be selected. This function must be set before the instrument is calibrated as it affects the indicator display. See section 6.10.1 **'rEF' Calibration of internal references** The indicator contains two references representing 4 and 20mA. These internal references are used when the indicator display is calibrated without an external current calibrator, and when the input current is displayed in milliamps. See the SEt and C--P functions. If either of these functions is to be used, the internal references should be periodically calibrated. See section 6.10.2

Display	Description of function
'C - - P'	**Function of *P* push button** The BA326C digital indicator may be programmed to display the input current in milliamps or the input current as a percentage of the displayed span when the *P* push button is operated. See section 6.11
'null'	**Null display function** When activated the null function enables both displays to be zeroed at any input current to produce a deviation display. See section 6.12
'COdE'	**Security code** Defines a four digit numeric code which must be entered to gain access to programmable functions. Default code 0000 disables the security function and allows unrestricted access to all programmable functions. See section 6.13

6.2 Root extractor: root

This function is primarily intended for use with differential flowmeters which have a square law output. The root extractor linearises the input current between 4.04mA and 20mA (5 to 100% flow) so that the flow signal is displayed in linear units. For inputs below 4.04mA the BA326C displays zero. To activate the square root extractor select 'root' from the menu and press *P* which will reveal if the function is 'On' or 'OFF'. If the function is set as required, press *E* to return to the menu, or press the *Up* or *Down* button to change the setting, followed by the *E* button to return to the main menu.

For reference, the following table shows the output current from a non-linearised differential flowmeter.

% of full flow	Current output mA
5.0	4.04
10.0	4.16
25.0	5.00
50.0	8.00
75.0	13.00
100.0	20.00

6.3 Digital display: dSPL

When only an analogue display is required or when the instrument is mounted horizontally the digital display may be disabled. To change the status of the digital display select 'dSPL' from the main menu and press *P* which will show if the digital display is 'On' or 'OFF'. If set as required, press *E* to return to the menu, or press the *Up* or *Down* button to change the setting, followed by the *E* button to return to the main menu.

6.4 Display resolution: rESn

This function defines the resolution of the display digit but does not affect the bargraph. Decreasing the display resolution can improve the readability of a noisy signal. Select 'rESn' from the menu and press *P* which will reveal the current display resolution. To change the resolution press the *Up* or *Down* button to select 1, 2, 5 or 10 digits. When the required resolution is shown press *E* to return to the main menu.

6.5 Dummy trailing zero: dZErO

The BA326C digital display can show any number between -19999 and 19999. If a larger number is required a trailing dummy zero can be activated which extends the display range from -19990 to 99990 The last digit is a dummy so the maximum resolution is 10 digits i.e. the last digit is always 0.

To change the status of the trailing dummy zero select 'dZErO' from the main menu and press *P* which will reveal if the dummy zero is 'On' or 'OFF'. If the function is set as required, press *E* to return to the main menu, or press the *Up* or *Down* button to change the setting, followed by the *E* button to return to the main menu.

After activating the dummy trailing zero, care should be taken to ensure that the digital display does not overrrange.

6.6 Position of the decimal point: d.P.

A dummy decimal point can be positioned between any of the digits, including the dummy trailing zero, or may be absent. To position the decimal point select 'd.P.' from the menu and press *P*. The decimal point can then be moved or turned off by pressing the *Up* or *Down* push button, followed by *E* to return to the main menu.

6.7 Bargraph display: bAr

This function enables the 4/20mA input to be displayed as a column or a single segment on one or both of the 100 segment bargraphs. When optional alarms are fitted the right hand bargraph always displays the alarm setpoints.

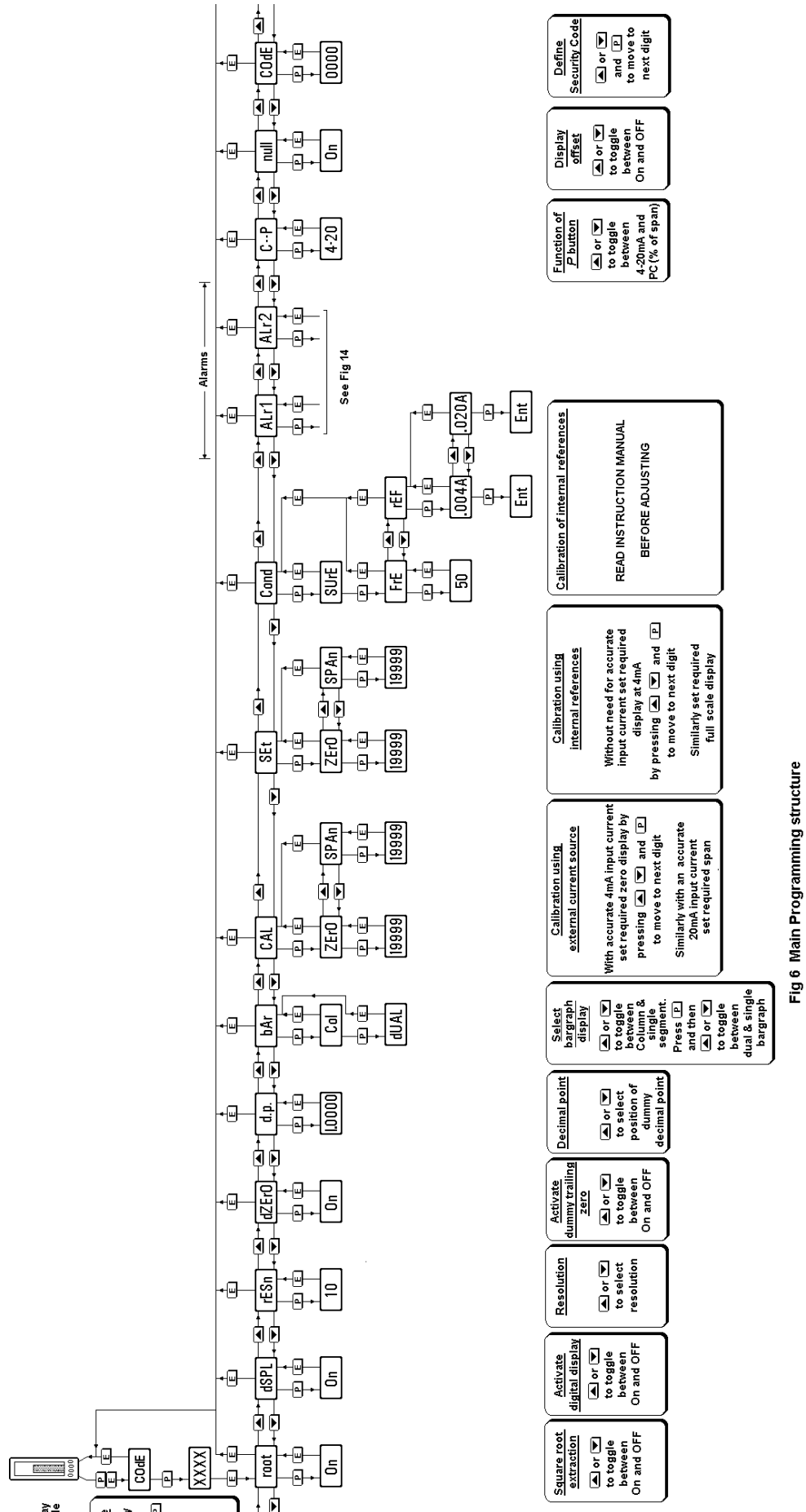

Fig 6 Main Programming structure

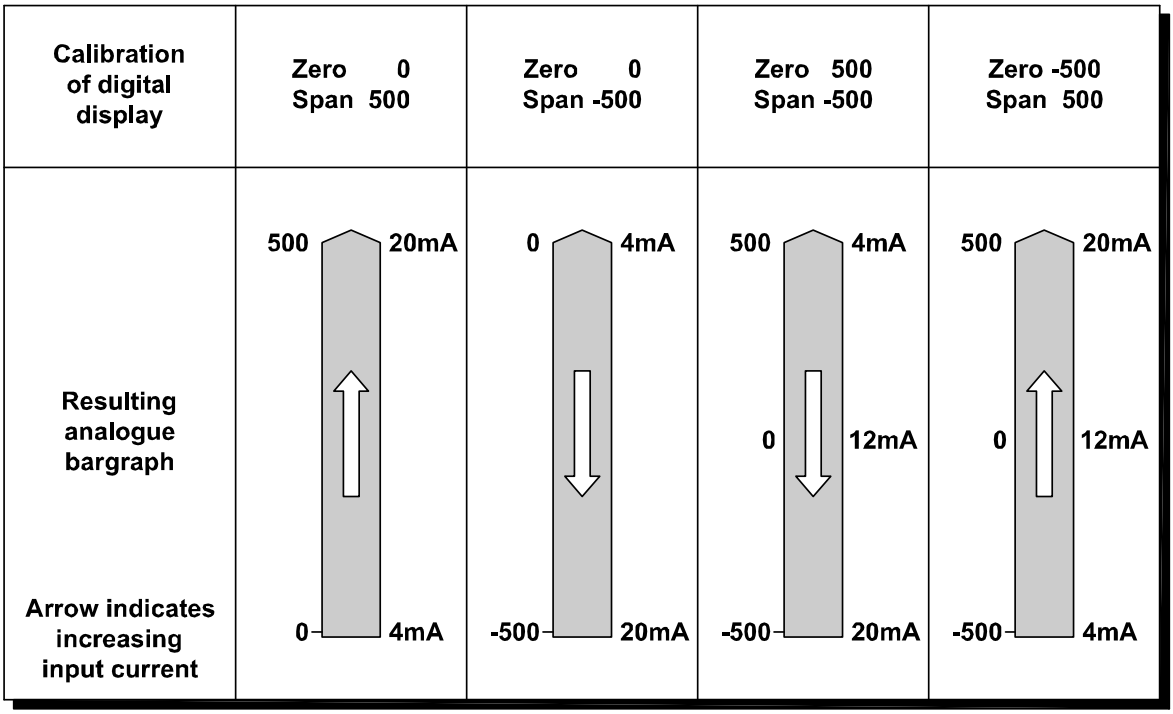

Fig 7 Configuration of analogue bargraph

To change the bargraph display parameters select 'bAr' from the main menu and press *P* which will reveal if the BA326C is programmed to display a column 'Col' or a single segment 'SEg'. The setting can be changed by pressing the *Up* or *Down* buttons. Pressing *P* again will show if the BA326C is programmed to display the input current on both bargraphs 'dUAL' or on just the left hand bargraph 'SnGL'. Again pressing the *Up* or *Down* buttons will change the setting. At any point in the procedure pressing the *E* button will return the instrument to the main programme menu.

6.8 Calibration using an external current source: CAL

This function enables the zero and span of the digital display to be adjusted using an external calibrated current source. When used with an accurate traceable current source this is the preferred method of calibration.

The analogue bargraph is automatically calibrated when the digital display is calibrated, therefore no separate adjustments are required. Fig 7 shows the analogue display resulting from various digital display calibrations.

To calibrate the indicator select 'CAL' from the main menu and press *P.* The indicator will display 'ZErO' which is a request for a 4mA input current. Adjust the external current calibrator to 4.000mA and again press *P* which will reveal the current zero display. Each digit, except the dummy zero if activated, of the indicator display can be changed by pressing *Up* or *Down* buttons. When the first digit is correct pressing *P* will transfer control to the next digit. When all the digits have been adjusted, press *E* to enter the new zero. The indicator will display 'Ent' for a few seconds while the information is being stored in memory, and will then return to the 'ZErO' prompt.

To adjust the digital display at 20mA, press the *Up* button which will cause the indicator to display 'SPAn'. Adjust the external current calibrator to 20.000mA and again press *P* which will reveal the existing full scale display. Each digit of the indicator display, except the dummy zero if activated, can be changed by pressing the *Up* or *Down* buttons. When the first digit is correct pressing *P* will transfer control to the next digit. When all the digits have been adjusted press *E t*o enter the new span. The indicator will display 'Ent' for a few seconds while the information is being stored in memory, and will then return to the 'SPAn' prompt. Finally press *E* again to return to the main menu.

This function may also be used when calibrating a complete loop from primary element to indicator display e.g. when the indicator is displaying the output from a level to current converter.

6.9 Calibration using internal references: SEt

This function enables the zero and span of the digital indicator to be adjusted without the need for an accurate external current source, or for disconnection from the 4/20mA loop.
The accuracy of this method depends upon the accuracy of the internal references which should be regularly calibrated as described in section 6.10.2

The analogue bargraph is automatically calibrated when the digital display is calibrated, no separate adjustments are required. Fig 7 shows the analogue display resulting from various digital display calibrations.

To calibrate the indicator select 'SEt' from the main menu and press *P.* The indicator will display 'ZErO', pressing *P* again will reveal the current display at 4mA. Each digit, except the dummy zero if activated, of the indicator display can be changed by pressing the *Up* or *Down* buttons. When the first digit is correct pressing *P* will transfer control to the next digit. When the least significant digit has been adjusted, press *E* to return to the 'ZErO' prompt which completes the adjustment.

To adjust the display at 20mA, press the *Up* button which will cause the indicator to display 'SPAn'. pressing *P* again will reveal the indicator display. Each digit of the display, except the dummy zero when activated, can be changed by pressing the *Up* or *Down* buttons. When the first digit is correct, pressing *P* will transfer control to the next digit. When the least significant digit has been adjusted press *E t*o return to the 'SPAn' prompt followed by *E* to return to the menu.

6.10 Conditioning sub-menu: Cond

This is a password protected sub-menu which allows the mains (line) frequency at which the indicator has maximum ac rejection to be selected, and the two internal references to be calibrated.

To gain access to the sub-menu select 'Cond' from the main menu and press *P*. The indicator will display '0000'. Using the *Up* and *Down* buttons and the *P* button to move to the next digit enter the password 'SurE'. (Note that 'S' is entered as '5'). Pressing E will then give access to the two functions in the sub-menu.

6.10.1 AC rejection: FrE

CAUTION

If the mains filter frequency is changed, the indicator display and internal references (if used) must be recalibrated.

To provide maximum low frequency rejection the internal digital filter may be set to operate at 50 or 60Hz to correspond with the local mains (line) frequency. To change the frequency select 'FrE' from the 'Cond' sub-menu and press *P* which will reveal the current setting. The setting can be toggled between the two options by pressing the *Up* or *Down* buttons. When set as required press the *E* button to return to the sub-menu.

6.10.2 Calibration of internal references: rEF

CAUTION

Do not attempt to recalibrate these references unless you have adequate test equipment and have read the following instructions.

The indicator contains two references representing 4 and 20mA. These references are used in the 'SEt' function which enables the indicator displays to be calibrated without an external current calibrator. They are also used in the 'C--P' function if the instrument is programmed to display the input current when the *P* push button is operated. **If the 'SEt' or 'C--P' functions are not used, it is not necessary to calibrate these internal references.**

To calibrate the references select 'rEF' from the sub-menu and press *P* which will result in a '.004A' prompt being displayed. Adjust the external current calibrator to 4.000mA and again press *P* . The indicator will display 'Ent' when the 4mA reference has been updated and will then return to the '.004A' prompt.

To re-calibrate the 20mA internal reference, press the *Up* button which will cause the indicator to display '.020A'. Adjust the external current calibrator to 20.000mA and again press *P* . The indicator will display 'Ent' when the 20mA reference has been updated and will then return to the '.020A' prompt. Two operations of the *E* button will return the indicator display to 'Cond' in the main menu.

The accuracy of the internal references, and hence the display accuracy, will depend upon the accuracy of the external current source. With a maximum span of 19999 the indicator has a display resolution of 0.8µA, we therefore recommend that the accuracy of the external current source used for calibration is greater than 0.4µA.

6.11 Function of the *P* push button: C - - P

This parameter defines the function of the *P* push button when the indicator is in the display mode. While the button is operated the digital display will show the input current in milliamps, or the input current as a percentage of the span. The analogue display continues to operate normally while the *P* button is operated.

To check or change the parameter select 'C - -P' from the main menu and press *P* to reveal the current setting. Pressing the *Up* or *Down* button will toggle the setting between '4-20' the current display and 'PC' the percentage display. When set as required press *E* to return to the main menu.

Accuracy of the current display depends upon the accuracy of the internal references which should be periodically calibrated - see section 6.10.2

6.12 Null display function: null

This function enables the BA326C analogue bargraph to operate as a deviation indicator displaying the difference between the input current and a specified reference.

To activate this function select 'null' from the main menu and press *P* . Pressing the *Up* or *Down* button will toggle the function between 'OFF' and 'On', when set as required press *E* to return to the main menu.

To define the input about which deviation is to be displayed the BA326C must be returned to the display mode. With the instrument displaying the required input reference, press the *Down* and *E* buttons simultaneously. The BA326C will respond by displaying 'null' for a few seconds, after which the reference input will be automatically subtracted from both the analogue and digital displays.

Starting at the reference point, the bargraph will display a column extending upwards or downwards to indicate the difference between the input and the reference. Fig 8 illustrates the display resulting from a BA326C calibrated to display 0 to 1000 when nulled at 500 (12mA) and 250 (8mA).

To prevent accidental or unauthorised access the null function can only be used once. If the reference point needs to be changed, the null function must be turned off and then back on from the main programme menu.

To prevent inadvertent alarm setpoint changes, the null function can not be operated if either of the optional alarms are enabled. If alarms are required, they must be enabled after the null function has been used.

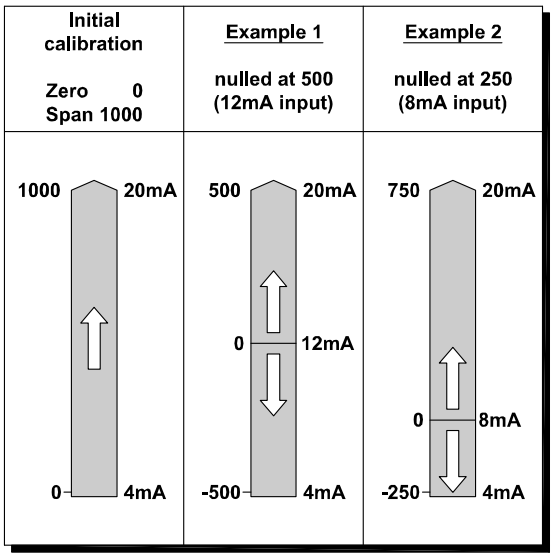

Fig 8 Effect of nulling at two different inputs

6.13 Security code: COdE

The calibration and conditioning of the instrument may be protected by a four digit security code which must be entered before access to the programme menu is granted. New instruments are programmed with the default security code 0000 which allows unrestricted access to all programming functions.

To enter a new security code select 'COdE' from the menu and press *P* which will cause the indicator to display the current security code. Each digit of the code can be changed using the *Up* and *Down* push buttons, and the *P* button to move to the next digit. When the required code has been entered press *E* to return to the main menu. The revised security code will be activated when the indicator is returned to the operating mode.

If the security code is lost, access to the programmable functions can be obtained by moving the internal security link to the override position. The original security code can then be viewed by selecting 'CodE' from the main menu and pressing *P*.

To gain access to the security code link, remove the instrument terminal block(s) by gently pulling. Unscrew the six screws securing the rear panel, and lift off the panel which will reveal the link as shown in Fig 9.

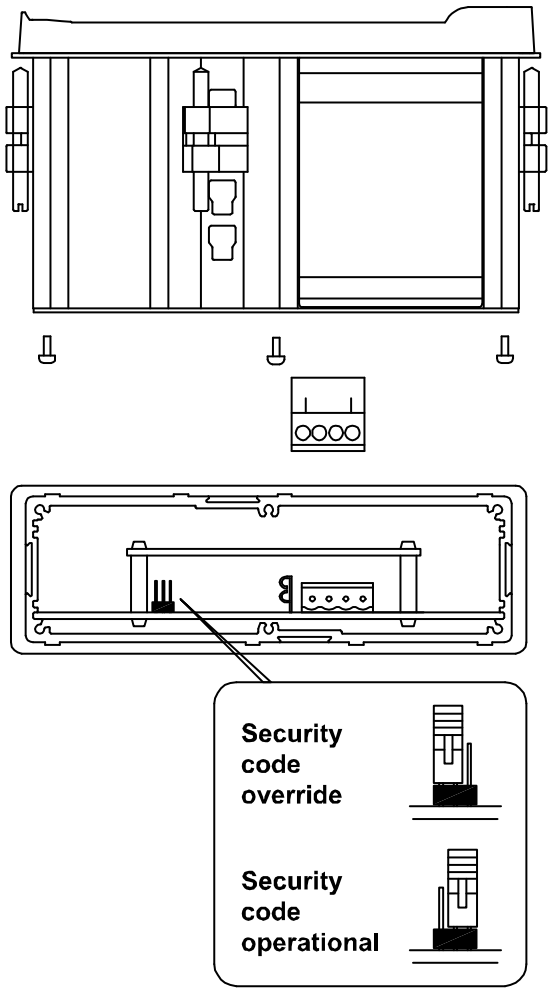

Fig 9 Location of security code override link

6.14 Over and under-range

If the range of the digital display is exceeded, the four least significant digits will be blanked. Under-range is indicated by '-1' and over-range by '1'. Under and over-range are also indicated if the input current falls below approximately 3.5mA or rises above approximately 21mA.

The bargraph displays an upward pointing arrow when overrange occurs and a single negative segment and the zero bar for underrange.

If the instrument input current falls below 3mA the initialisation sequence is performed as described in section 2.

7. CALIBRATION EXAMPLES

The following examples illustrate the two ways in which a BA326C indicator may be calibrated.

7.1 Using an external current source

The BA326C indicator is required to display:

0.0	with a 4mA input
1500.0	with a 20mA input

from a linear level transducer. Maximum display resolution is required, the frequency of the local mains is 50Hz and the existing security code is 1209. In the operating mode the indicator is required to display the input current as a percentage of span when the *P* push button is operated.

Step 1 Connect indicator to calibrator
Connect the indicator to an accurate external current source. Terminal 1 positive. The indicator will automatically perform the initialisation routine described in section 2, and then display the input current using the existing calibration information.

Step 2 Enter programming mode
With an input current between 4 and 20mA put the indicator in the programming mode by simultaneously pressing *P* and *E.* The indicator will respond by displaying 'COdE'. Press *P* to clear this prompt and set the display to the security code 1209 using the *Up*, *Down* and *P* push buttons. Pressing *E* will enter the code, the first parameter 'root' in the main menu will then be displayed.

Step 3 Square root extraction
With 'root' displayed, press *P* which will reveal the root extractor status. The root extractor can be turned on or off by the *Up* or *Down* buttons. Select 'OFF', and press *E* to return to the main menu.

Step 4 Select frequency of max rejection
Scroll though the main menu until 'Cond' is displayed and press *P.* The indicator will display the prompt 'SurE' which is a warning that changing the parameters in this sub-menu will change the instrument calibration. To enter the 'FrE' sub-menu press *P*, and then again to reveal the frequency of maximum rejection. Select '50' Hz using the *Up* or *Down* buttons, and finally return to the main menu via the 'FrE' prompt by pressing *E* twice.

Step 5 Define function of P push button
Select 'C--P' from the main menu and press *P* to reveal the function of the *P* button in the display mode. Select percentage 'PC' and return to the main menu by pressing *E*
Note: Because an input current display in milliamps is not required, it is not necessary to calibrate the two internal references.

Step 6 Position dummy decimal point
Scroll though the main menu until 'd.P.' is displayed and then press *P*. Using the *Up* and *Down* push buttons position the dummy decimal point in front of the least significant digit.
Press *E* to return to the main menu.

Step 7 Calibrate the digital display
Scroll through the main menu until 'CAL' is displayed. Press *P* and the indicator will request a 4mA input by displaying 'ZErO'. Set the input current to 4.0000 ± 0.0004mA and press *P* again which will reveal the existing zero display. Using the *Up*, *Down* and *P* push buttons enter the required zero display of 000.0 Press *E* to return to the 'ZErO' prompt. The indicator will display 'Ent' while storing this figure.

Press *the Up* push button and the indicator will request a 20mA input by displaying 'SPAn'. Set the input current to 20.0000 ± 0.0004mA and again press *P* which will reveal the existing display at 20mA. Using the *Up*, *Down* and *P* push buttons enter the required display of 1500.0
Press *E* twice to return to the main menu. The indicator will display 'Ent' while storing this figure.
The analogue bargraph will be automatically calibrated to display 0 with 4mA input and full scale with 20mA input.

Step 8 Return to the display mode
Following completion of calibration return to the display mode by pressing *'E*'.

7.2 Using the internal references

As in 7.1 the BA326C is required to display:

0.0	with a 4mA input
1500.0	with a 20mA input

from a linear level transducer. Maximum display resolution is required, the frequency of the local mains is 50Hz, and the existing security code is 1209. In the operating mode the indicator is required to display the input current in milliamps when the *P* push button is operated.

This example assumes that the internal references have been routinely calibrated.

Step1 Enter the programming mode
With an input current between 4 and 20mA put the indicator in the programming mode by simultaneously pressing *P* and *E.* The indicator will respond by displaying 'COdE'. Press *P* to clear this prompt and set the display to the security code 1209 using the *Up*, *Down* and *P* pushbuttons. Pressing *E* will enter the code, and the first parameter 'root' in the main menu will be displayed.

Step 2 Square root extractor
With 'root' displayed, press *P* which will reveal the root extractor status. The root extractor can be turned on or off by the *Up* or *Down* buttons. Select 'OFF', and press *E* to return to the main menu.

Step 3 Select frequency of max rejection
Scroll though the main menu until 'Cond' is displayed. Enter the sub-menu by pressing *P* twice and select the 'FrE' function. Using the *Up* or *Down* buttons select '50', and then press *E* twice to return to the main menu.

Step 4 Define function of *P* push button
Select 'C--P' from the main menu and press *P* to reveal the function of the *P* button in the display mode. Select '4-20' and return to the main menu by pressing *E*.

Step 5 Position dummy decimal point
Select 'd.P' from the main menu and then press *P*. Using the *Up* and *Down* push buttons position the dummy decimal point in front of the least significant digit.
Press *E* to return to the main menu.

Step 6 Calibrate digital display
With any input current between 4 and 20mA select 'SEt' from the main menu and press *P.* The indicator will display 'ZErO' in the sub-menu; press *P* to reveal the existing zero display. Using the *Up*, *Down* and *P* push buttons enter the required zero display of 000.0 Press *E* to return to the 'ZErO' prompt.

Again with any input current between 4 and 20mA press *the Up* push button and the indicator will display 'SPAn'. Press *P* to reveal the existing span display. Using the *Up*, *Down* and *P* push buttons enter the required span display of 1500.0 Press *E* to return to the 'SPAn' prompt. Press *E* again to return to the main menu.

The analogue bargraph will be automatically calibrated to display 0 with 4mA input and full scale with 20mA input.

Step 7 Return to display mode
Following completion of calibration return to the display mode by pressing *'E'*.

8. MAINTENANCE

8.1 Fault finding during commissioning

If a BA326C fails to function during commissioning the following procedure should be followed:

Symptom	Cause	Solution
No display	Incorrect wiring	There should be 1.1V between terminals 1 & 3 with terminal 1 positive.
No display and no volts between terminals 1 and 3.	Incorrect wiring or no power supply.	Check that a current is flowing in the loop.
	Insufficient loop voltage to operate indicator	Check supply voltage and voltage drops caused by all components in the loop
No display 0V between terminals 1 & 3	Incorrect wiring or no power supply.	Check supply voltage and voltage drop caused by all the instruments in the loop.
	Insufficient loop voltage to operate indicator	Check supply voltage and voltage drops caused by all components in the loop
	If just driving an indicator, some isolators may not function with only a 1.1V load.	Increase load. See Appendix 2.
Indicator displays 1	Positive over-range	The indicator has been incorrectly calibrated & is trying to display a number greater than 19999, or input current is greater than approximately 21mA.
Indicator displays -1	Negative 0ver-range	The indicator has been incorrectly calibrated & is trying to display a number less than -19999, or the input current is less than approximately 3.5mA.
Unstable display	4/20mA input has a large ripple content.	Check loop supply voltage.
Unable to enter the programme mode	Incorrect security code entered.	Enter correct security code or fit security link in override position. See Fig 9.

8.2 Fault finding after commissioning

ENSURE PLANT SAFETY BEFORE STARTING MAINTENANCE

Live maintenance is permitted on intrinsically safe equipment installed in a hazardous area, but only certified test equipment should be used unless a gas clearance certificate is available.

If a BA326C fails after it has been functioning correctly, the following procedure should be followed:

Symptom	Cause	Solution
No display and no volts between terminals 1 and 3.	No power supply	Check that a current is flowing in the loop.
Unstable display	4/20mA input has a large ripple.	Check loop supply voltage.
Incorrect calibration	Digital filter FrE has been changed after indicator was calibrated.	Recalibrate

If this procedure does not reveal the cause of the fault, it is recommended that the instrument is replaced. This can be done without disconnecting power, but while the indicator is disconnected the 4/20mA loop will be open circuit.

8.3 Servicing

All standard BA326C indicators are interchangeable, and a single spare may be used to replace any instrument which fails.

We recommend that faulty instruments are returned to BEKA associates or to our local agent for repair.

8.4 Routine maintenance

The mechanical condition of the instrument and electrical calibration should be regularly checked. The interval between inspections should be chosen to suit the environmental conditions.

8.5 Guarantee

Indicators which fail within the guarantee period should be returned to BEKA associates or our local agent. It is helpful if a brief description of the fault symptoms is provided.

8.6 Customer comments

BEKA associates is always pleased to receive comments from customers about our products and services. All communications are acknowledged and whenever possible, suggestions are implemented.

9. ACCESSORIES

9.1 Units of measurement and instrument identification

All BA326C indicators are fitted with a display label behind the armoured glass window. This label can be supplied with any analogue scale graduations, units of measurement and applicational information specified at the time of ordering.

If specified at the time of ordering, the BA326C can be supplied with tag or applicational information printed onto the instrument certification label which is located on the side the enclosure. The following can be accommodated:

1 row of 9 alphanumeric characters 10mm high

or 1 row of 11 alphanumeric characters 7mm high

or 2 rows of 18 alphanumeric characters 5mm high

9.2 Alarms

All BA326C indicators include dual alarm functions which may be used to show acceptable operating limits, but alarm outputs are only fitted when the alarm option is specified at the time of purchase.

The two solid state single pole alarm outputs which may be independently programmed as high or low alarms with normally open or normally closed outputs. Fig 10 illustrates the conditions available and shows which are fail safe, i.e. output is in the alarm condition (open) when the 4/20mA input current is zero.

CAUTION

These alarm outputs should not be used for critical safety applications such as shut down systems.

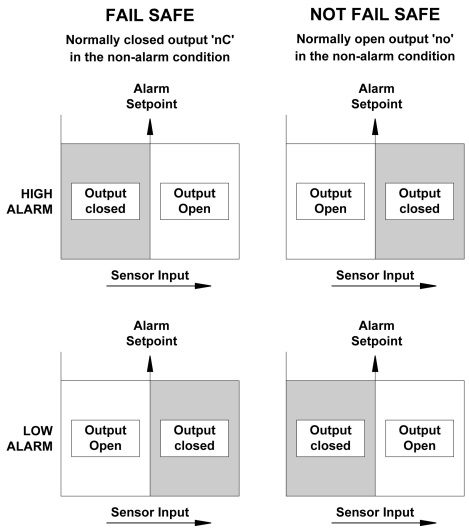

Fig 10 Alarm outputs

When one or both of the alarms is enabled, the right hand analogue bargraph indicates the position of the alarm setpoint(s) so they can be easily compared with the measured value. The type of setpoint display depends upon alarm conditioning and the relative values of the two setpoints.

When alarm 1 is programmed as a low alarm and alarm 2 as a high alarm, the display shown in Fig 11A will be produced providing setpoint 1 is less than setpoint 2. If the low setpoint (1) is greater than the high setpoint (2), or the function of the alarms is reversed, the setpoints will be indicated by two single segments on the right hand bargraph as shown in Fig 11B.
If only one alarm is enabled the setpoint will be indicated by a column extending from the setpoint to the top of the display for a high alarm, and from the setpoint to the bottom of the display for a low alarm.

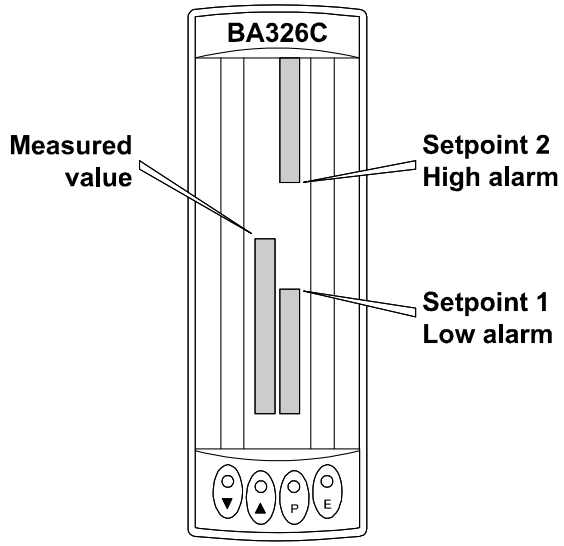

Fig 11A Set point display

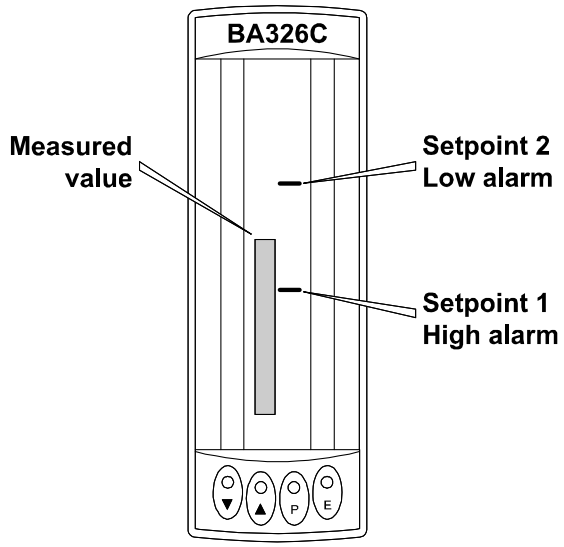

Fig 11B Display with set points reversed

Annunciators above the digital display show the status of both alarms, and the digital display can be programmed to alternate between the measured value and an alarm identification.

Programmable functions for each alarm include adjustable setpoint, hysteresis, alarm delay and alarm accept. When frequent setpoint changes are required, a separate menu provides direct access to both setpoints from the display mode without giving the operator access to the programme and alarm menus. A different security code may be included to prevent tampering or accidental adjustment.

9.2.1 Solid state output

Each alarm has a galvanically isolated single pole solid state switch output as shown in Fig 12. The outputs are polarised and current will only flow in one direction. Terminal 8 and 10 should be connected to the positive side of the supply.

Ron	=	5ohms + 0.6V
Roff	=	greater than 180k

Note: Because of the series protection diode some test meters may not detect a closed alarm output.

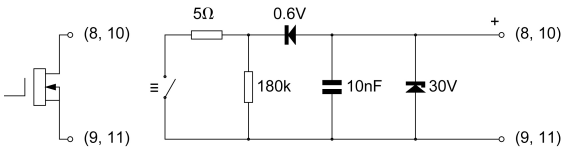

Fig 12 Equivalent circuit of each alarm output

9.2.2 Intrinsic safety

Each alarm output is a separate galvanically isolated solid state switch. The intrinsic safety certificates specify that under fault conditions the voltage, current and power at each alarm output will not exceed those specified for *simple apparatus* in EN 60079-11. This allows each of the BA326C alarm outputs to be connected to any intrinsically safe circuit protected by a Zener barrier or galvanic isolator providing that the output parameters of each circuit do not exceed:

Uo	28V dc
Io	200mA
Po	0.84W

The maximum equivalent capacitance and inductance of each BA326C alarm output is:

Ci	=	20nF
Li	=	10µH

To determine the maximum permissible cable parameters, the equivalent alarm output parameters must be subtracted from the maximum cable capacitance and inductance specified for the circuit connected to each alarm.

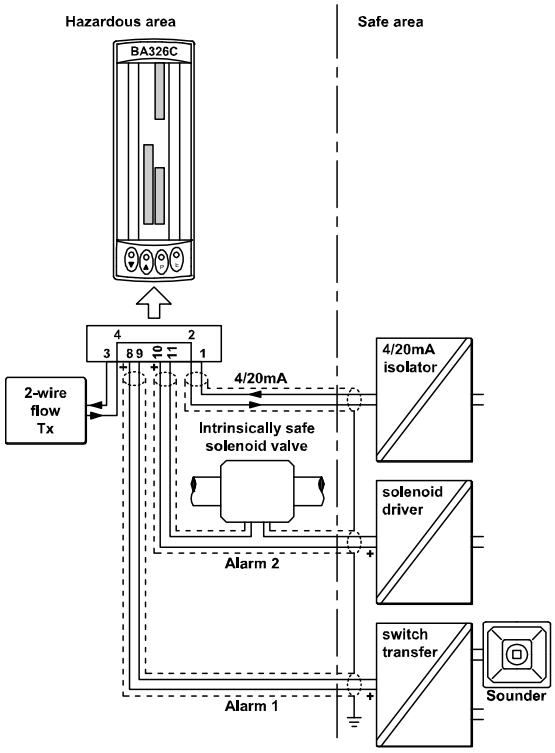

Fig 13 Typical alarm application

9.2.3 Programming and adjustment

When an alarm card is added to a BA326C the main programme menu is extended as shown in Fig 14. The additional functions appear between 'Cond' and 'C--P' in the main menu. For simplicity Fig 14 only shows the additional functions available on alarm 1, but alarm 2 has identical facilities.

The following table summaries each of the alarm programme functions and includes a cross reference to more detailed information. Again only the functions on alarm 1 are listed, but alarm 2 has identical facilities

Summary of programmable alarm functions

Display	Description of function
'EnbL'	**Alarm enable** Enables or disables the alarm function without changing the alarm parameters. See section 9.2.4
'SP1'	**Alarm setpoint 1** Adjusts the alarm setpoint. The alarm is activated when the indicator display equals the setpoint. See section 9.2.5
'HI.LO'	**Alarm function** Defines whether the alarm has a high or low function See section 9.2.6
'no.nc'	**Normally open or normally closed output** Determines whether the single pole alarm output is open or closed in the alarm condition. See section 9.2.7
'HStr'	**Hysteresis** Adjusts the alarm hysteresis. See section 9.2.8
'dELA'	**Alarm delay time** Adjusts the delay between the display equalling the setpoint and the alarm output being activated. See section 9.2.9
'SIL'	**Alarm silence time** Defines the time that the alarm output remains in the non-alarm condition following acceptance of an alarm. See section 9.2.10
'FLASH'	**Display alarm identification** Defines if the setpoint bargraph flashes when an alarm is activated. See section 9.2.11
'AcSP'	**Access setpoint** Sub-menu which enables direct access to the alarm setpoints from the indicator display mode, and defines a separate security code. See section 9.2.12

9.2.4 Alarm enable: EnbL

This function allows the alarm to be enabled or disabled without altering any of the alarm parameters. To check or change the function select 'EnbL' from the alarm menu and press *P* which will reveal the current setting. The function can be changed by pressing the *Up* or *Down* button followed by the *E* button to return to the alarm menu.

9.2.5 Setpoint adjustment: SP1 and SP2

The setpoint of each alarm may be positioned anywhere between -19999 and 19999 (-19990 and 99990 with dummy trailing zero) providing this corresponds to an input current between 3.8 and 20.2mA. e.g. If the indicator has been calibrated to display 0 with 4mA input and 10000 with 20mA input, the two alarm setpoints may be positioned anywhere between -125 and 10125.

To adjust the setpoint select 'SP1' or 'SP2' from the alarm menu and press *P* which will reveal the existing alarm setpoint. Each digit of the setpoint can be adjusted using the *Up* and *Down* push buttons, and the *P* button to move to the next digit. When the required setpoint has been entered press *E* to return to the alarm menu.

9.2.6 Alarm function: HI.LO

Each alarm can be conditioned as a high or low alarm. To check or change the alarm function select 'HI.LO' from the alarm menu and press *P* to reveal the current setting. The function can be changed by pressing the *Up* or *Down* buttons followed by the *E* button to return to the alarm menu.

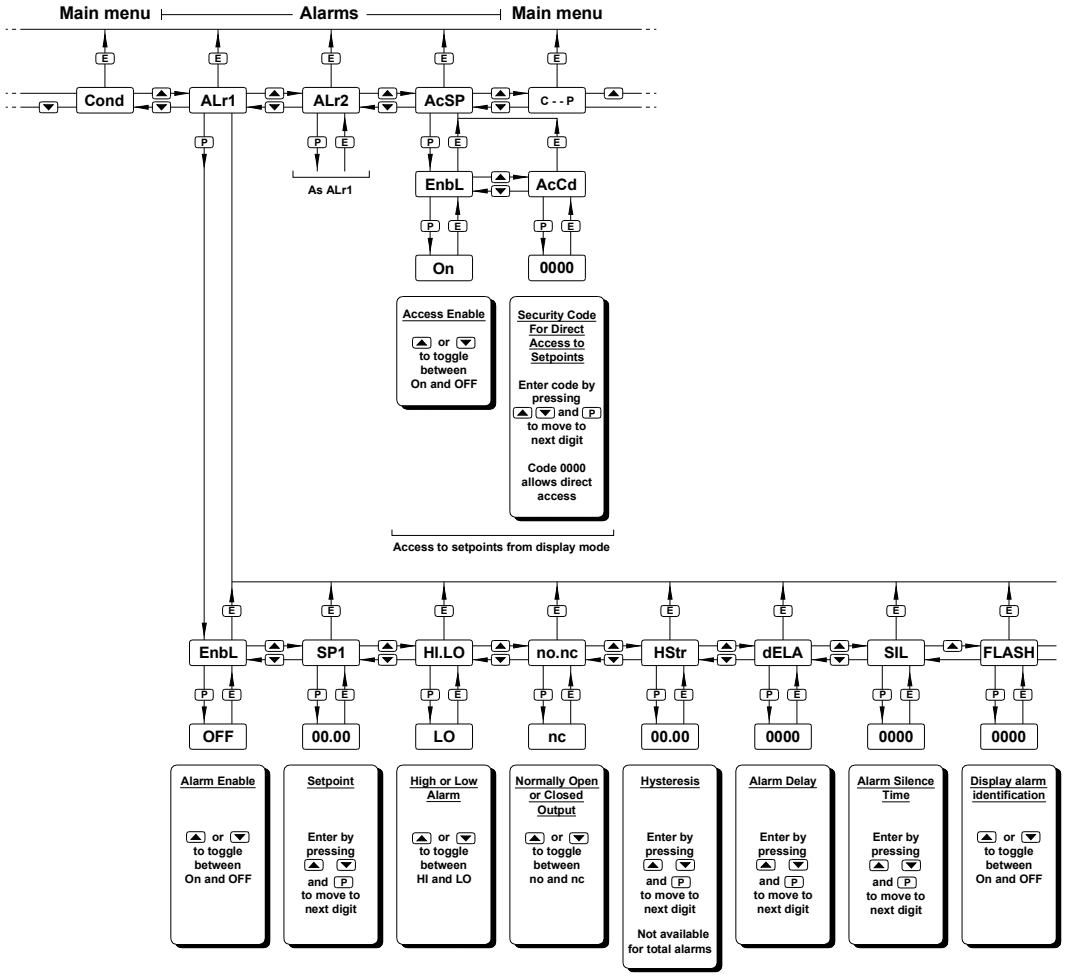

Fig 14 Alarm Programme Menu

9.2.7 Alarm output status: no.nc

This function allows the alarm output to be open or closed in the alarm condition. When deciding which is required, care must be taken to ensure that the alarm output is fail safe.
See Fig 10.

CAUTION

When the 4/20mA supply is removed both alarm outputs will open irrespective of conditioning. Therefore for fail safe operation both alarm outputs should be programmed to be open in the alarm condition.

To check or change the alarm output status select 'no.nc' from the alarm menu and press *P* reveal the current setting. The function can be changed by pressing the *Up* or *Down* button followed by the *E* button to return to the alarm menu.

9.2.8 Hysteresis: HStr

During programming hysteresis is shown in the units the indicator has been calibrated to display.To adjust the hysteresis, select 'HStr' from the alarm menu and press *P* which will reveal the existing figure. Each digit can be adjusted using the *Up* and *Down* push buttons, and the *P* button to move to the next digit. When the required hysteresis has been entered, press *E* to return to the alarm menu.

e.g. An indicator calibrated to display 0 to 10000, with a high alarm set at 9000 and hysteresis of 200 will perform as follows:

> High alarm will be activated when display equals or exceeds 9000, but will not reset until the display falls below 8800.

9.2.9 Alarm delay: dELA

This function enables activation of the alarm output to be delayed for a fixed time following the alarm condition occurring. The delay can be programmed in 1 second increments up to 3600 seconds. If a delay is not required zero should be entered. To adjust the delay select 'dELA' from the alarm menu and press *P* which will reveal the existing delay. Each digit of the delay can be adjusted using the *Up* and *Down* push buttons, and the *P* button to move to the next digit. When the required delay has been entered, press *E* to return to the alarm menu.

If the 'FLASH' function is activated the alarm annunciator will flash until the delay time expires, after which the alarm bar or column will flash.

9.2.10 Alarm silence time: SIL

This function is primarily intended for use in small installations where the alarm output directly operates an annunciator such as a sounder. When the alarm silence time is set to any figure other than zero, the *P* push button becomes an alarm accept button. After an alarm has occurred, operating the *P* button will cause the alarm output to revert to the non-alarm condition for the programmed alarm silence time. The alarm annunciator(s) will continue to indicate an alarm after it has been accepted and silenced. The alarm silence time may be adjusted between 0 and 3600 seconds in 1 second increments.
To adjust the alarm silence time select 'SIL' from the alarm menu and press *P* which will reveal the existing time. Each digit can be adjusted using the *Up* and *Down* push buttons, and the *P* button to move to the next digit. When the required time has been entered press *E* to return to the alarm menu.

If the 'FLASH' function is activated the alarm bar or column will flash when the alarm occurs. When the alarm is silenced by pushing the *P* button, the alarm bar or column will stop flashing but the alarm annunciator will flash until the alarm silence time expires.

9.2.11 Display alarm identification: FLASH

The status of each alarm is always shown by an alarm annunciator located above the digital display. In addition to this annunciator, this function provides an alarm warning on the analogue bargraph display. When the function is enabled and an alarm occurs, the setpoint bar or column flashes. To check or change the display alarm identification status select 'FLASH' from the alarm menu and press *P* to reveal the current setting. The function can be changed by pressing the *Up* or *Down* button followed by the *E* button to return to the alarm menu.

9.2.12 Access Setpoint: AcSP

This function controls a separate menu which provides direct access to the alarm setpoints when the indicator is in the display mode, as described in section 9.2.13 Thus allowing an operator to adjust the alarm setpoints without having access to the programme and alarm menus. Further protection is provided by a separate security code.
This direct access menu is enabled and a separate security code entered from the 'AcSP' function in the alarm programme menu shown in Fig 14. To change the menu parameters select 'AcSP' from the alarm programme menu and press *P* which will display the enable prompt 'EnbL'. Press *P* again to reveal if the direct access menu is 'On' or 'OFF'. The *Up* or *Down* buttons will toggle the display between the two conditions.
If 'OFF' is selected, the operator will not have access to the setpoints from the display mode. Return to the 'AcSP' prompt in the main menu by pressing *E* twice.
If 'On' is selected, the operator will have direct access to the alarm setpoints from the display mode via a separate optional security code. To define the four digit numerical code press *P* to return to the 'Enbl' prompt followed by the *Up* or *Down* button to select the access code prompt 'AcCd'. Pressing *P* will reveal the current security code. Each digit of the code may be changed by operating the *Up* and *Down* push buttons, and the *P* button to move to the next digit. When the required code has been entered, press *E* twice to return to the 'AcSP' prompt in the Programme Menu.
Code 0000 will disable the security code allowing direct access from the display mode to the setpoints by pressing the *P* and *Up* buttons simultaneously when the AcSP function is on.
New instruments with alarms are supplied with this function disabled and the security code set to 0000.

9.2.13 Adjusting alarm setpoints from the display mode

Access to the alarm setpoints from the indicator display mode is obtained by operating the *P* and *Up* push buttons simultaneously as shown in Fig 15. If the setpoints are not protected by a security code the alarm setpoint prompt 'SP1' will be displayed. If the setpoints are protected by a security code, 'COde' will be displayed first. Pressing *P* again will allow the alarm security code to be entered digit by digit using the *Up* and *Down* buttons to change the flashing digit, and the *P* push button to move to the next digit. If the correct code is entered pressing *E* will cause alarm setpoint prompt 'SP1' to be displayed. Pressing the *Up* or *Down* button will toggle the display between the two alarm setpoint prompts 'SP1' and 'SP2'.

If an incorrect security code is entered, or a button is not pressed for ten seconds, the indicator will automatically return to the display mode.

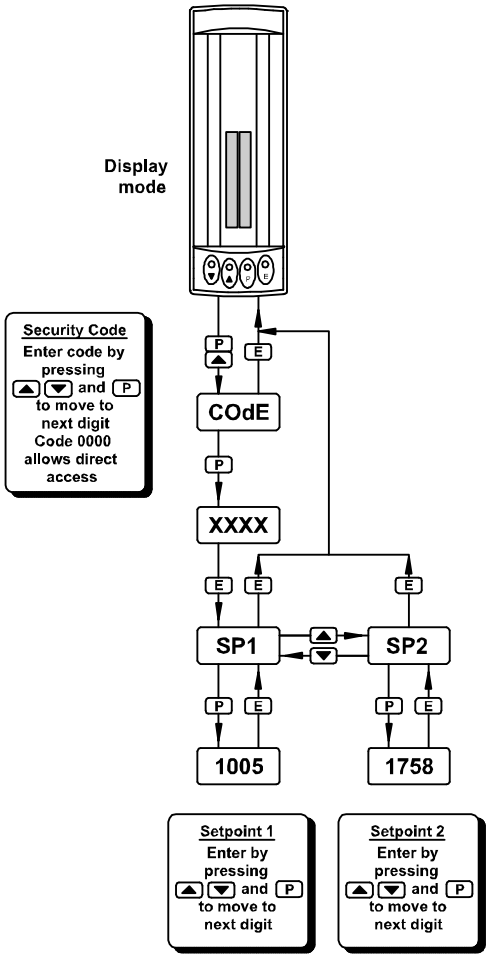

Fig15 Setpoint adjustment from the display mode

To adjust an alarm setpoint select 'SP1' or 'SP2' and press *P* which will reveal the current setting. Each digit of the setpoint may be adjusted using the *Up* and *Down* push buttons, and the *P* button to move to the next digit. When the required setpoint has been entered, pressing *E* will return the display to the 'SP1' or 'SP2' prompt from which the other setpoint may be selected, or the indicator may be returned to the display mode by pressing *E* again.
Direct access to the alarm setpoints is only available when the menu is enabled - see section 9.2.12

9.3 Lineariser

The indicator can be supplied with a sixteen point lineariser which may be adjusted to compensate for almost any non linear variable. For example, a level signal from a horizontal cylindrical tank may be linearised by the indicator to display the tank contents in linear volumetric units.

The addition of linearising software does not effect the intrinsic safety of the indicator.

Fig 16 shows a typical linearising characteristic. Up to sixteen break-points may be programmed to occur at any input current between 4 and 20mA. The slope between adjacent break-points may be set anywhere between -1250 and +1250 display counts per milliamp. Greater slopes may be programmed, but the indicator performance will be degraded. A linear characteristic can be obtained by programming just two points, one at 4mA and the other at 20mA.

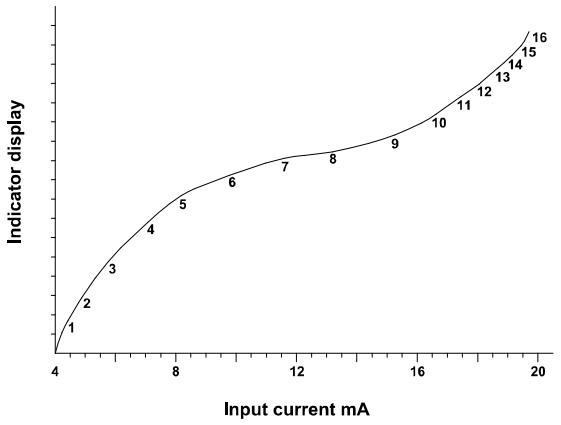

Fig 16 Typical indicator characteristic

Inclusion of the lineariser software extends the 'CAL' and 'SEt' functions as shown in Fig 17, and the root and null functions are omitted. from the main menu. As with a linear indicator, calibration may be performed with an external calibrator using the 'CAL' function, or from the internal references using the 'Set' function.

9.3.1 Calibration using an external current source: CAL

This method allows direct calibration with a current source, and is preferred when traceability is required. If the exact system non-linearity is unknown, the method also allows direct calibration from the variable to be displayed. e.g. The output from a level sensor in an irregular tank may be displayed in linear volumetric units by filling the tank with known incremental volumes and calibrating the indicator to display the sum of the increments at each break-point.

The number of break-points required must first be entered using the Add and dEL functions. In both these functions the indicator initially displays the current break-point and the total number of break-points being used. e.g.

5	13
current break-point	total number of break-points

Display	Description of function
'Add'	**Add a break-point** Adds a new break-point before the displayed break-point. The calibration of existing break-points is not changed, but the identification number of all subsequent break-points is increased by one.
'dEL'	**Remove a break-point** Removes the displayed break-point and joins the preceding break-point to the following break-point with a straight line. The identification number of all subsequent break-points is decreased by one.

To add a break-point select 'CAL' from the main menu and press *P* to enter the 'Add' function; press *P* again to reveal the current and total number of break-points. Each subsequent operation of the *P* push button will introduce an additional break-point. When adding a break-point to a calibrated indicator, the insertion position can be selected using the *Up* and *Down* push buttons.

The delete break-point function dEL operates in a similar manner to the Add function described above.

When the required number of break-points has been entered, return to the sub-menu by pressing *E.* The indicator will display 'Add' or 'dEL' depending upon the last function used. Each break-point can now be programmed.

Select 'PtS' from the sub-menu and press *P* which will select the first break-point '0 n', where n is the total number of break-points entered. The selected break-point can be changed using the *Up* and *Down* buttons. When the required break-point has been selected press *P*. Set the indicator input current to the exact value at which the break-point is to occur, and adjust the indicator display using the *Up* and *Down* buttons and *P* to move between digits. When the required display has been set, press *E* to enter the information and return to the sub-menu from which another break-point can be selected.

Repeat this procedure for each break-point, and then return to the main menu by pressing *E* twice.

9.3.2 Calibration using internal references: SEt

This function enables the break-points to be adjusted without the need for an accurate external current source. Throughout calibration the indicator input current may be any value between 4 and 20mA.

The accuracy of this method depends upon the accuracy of the internal references which should be calibrated periodically against a traceable external current source with a resolution of at least 0.4µA. See section 6.10.2

The number of break-points required should first be entered using the Add and dEL functions. In both these functions the indicator initially displays the current break-point and the total number of break-points being used. e.g.

5	13
current break-point	total number of break-points

Display	Description of function
'Add'	**Add a break-point** Adds a new break-point before the displayed break-point. The calibration of existing break-points is not changed, but the identification number of subsequent break-points is incremented.
'dEL'	**Remove a break-point** Removes the displayed break-point and joins the preceding break-point to the following break-point with a straight line. The identification of subsequent break-points is decremented.
'inPut'	**Defines the current at which break-point occurs** Enables the required current at each break-point to be defined without having to input an accurate input current to the indicator.
'diSP'	**Defines display at break-point** Enables the indicator display at each break-point to be defined.

Select 'SEt' from the main menu and press *P* once to enter the 'Add' function, and again to reveal the current and total number of break-points. Each subsequent operation of the *P* push button will introduce an additional break-point. When adding a break-point to a calibrated indicator, the insertion position can be selected using the *Up* and *Down* push buttons.

The delete break-point function 'dEL' operates in a similar manner to the 'Add' function described above.

When the required number of break-points has been entered, return to the sub-menu by pressing *E.* The indicator will display 'Add' or 'dEL' depending upon the last function used. The required indicator display at each break-point can now be entered, followed by the input current at which each break-point occurs.

To enter the required display at any break-point select 'dISP' from the sub-menu and press *P* which will select the first break-point '0 n', where 'n' is the total number of break-points selected. The selected break-point can be changed using the *Up* and *Down* buttons. When the required break-point has been selected press *P* to reveal the existing display. Using the *Up* and *Down* buttons and *P* to move between digits set the revised display. Press *E* to return to the sub-menu from which another break-point can be selected. Repeat this procedure for all the break-point displays to be changed, and then return to the 'diSP' prompt in the sub-menu by pressing *E.*

To enter the input current at which each break-point occurs select 'InPut' from the sub-menu and press *P* which will select the first break-point '0 n'. The selected break-point can be changed using the *Up* and *Down* buttons. When the required break-point has been selected, press *P* to reveal the input current at which the break-point occurs. Using the *Up* and *Down* buttons and *P* to move between digits, set the revised input current in mA. Press *E* to return to the sub-menu from which another break-point can be selected.

Repeat this procedure for all the break-point input currents to be changed, and then return to the 'InPut' prompt in the sub-menu by pressing *E.*

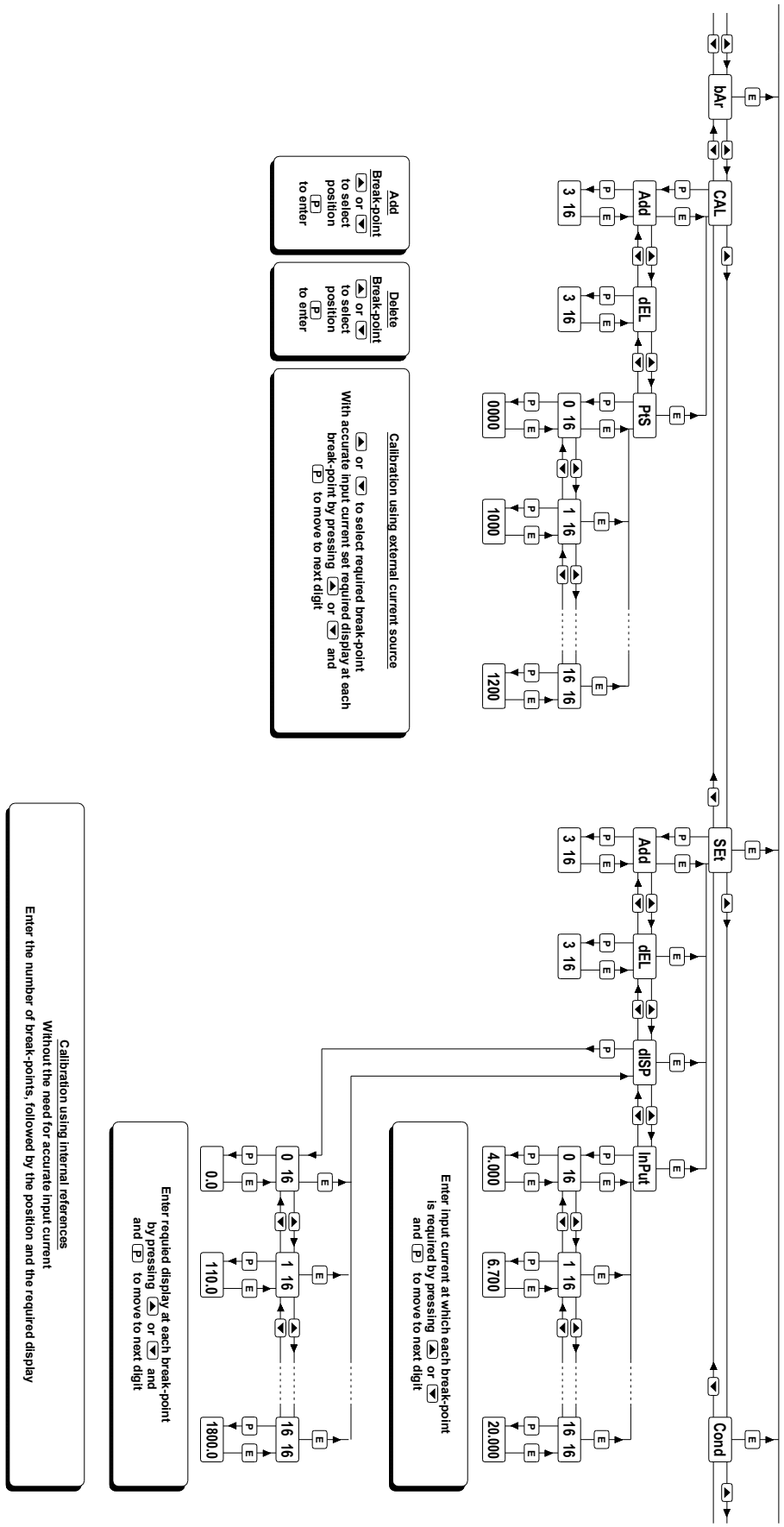

Fig 17. Lineariser Programme Structure

9.4 Display backlight

The BA326C can be supplied with LED backlighting to improve display contrast when the indicator is installed in poorly illuminated areas. The backlight is segregated from the measuring circuit and has been certified as a separate intrinsically safe circuit.

The backlight must be powered from the safe area via a Zener barrier or a galvanic isolator as shown in Fig 18. Any certified Zener barrier may be used, providing the output parameters do not exceed:

Uo	28V dc
Io	159mA
Po	0.8W

The maximum equivalent capacitance and inductance of the display backlight is:

Ci	=	30nF
Li	=	10µH

To determine the maximum permissible cable parameters, the equivalent backlight parameters must be subtracted from the maximum cable capacitance and inductance specified by the certificate of the Zener barrier or galvanic isolator powering the backlight.

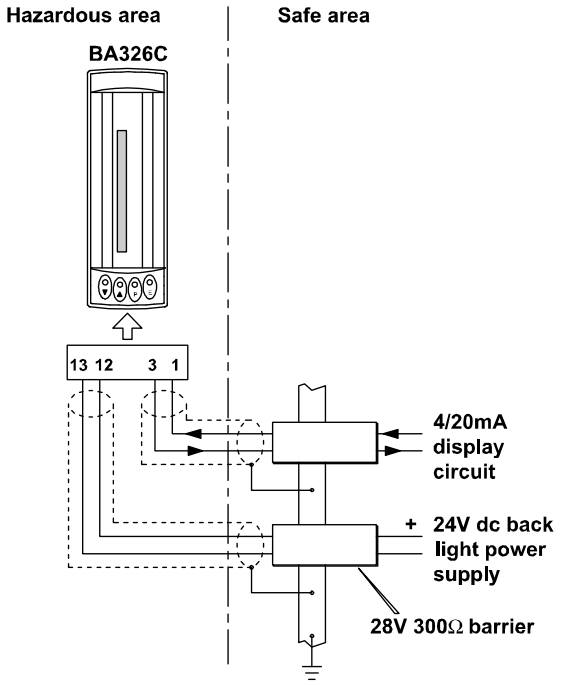

Fig 18 Backlight power supply

The display brilliance depends upon the current flowing through the backlight. This is determined by the supply voltage and the end-to-end resistance of the Zener barrier or output resistance of the galvanic isolator. Brilliance will not be significantly reduced until the current falls below 20mA.

$$\text{Backlight current} = \frac{\text{Vsupply} - 18}{\text{End-to-end resistance of barrier\#}}$$

\# or output resistance of galvanic isolator

Appendix 1

IECEx Certification

A1.0 The IECEx Certification Scheme

IECEx is a global certification scheme for explosion protected products which aims to harmonise international certification standards. For additional information about the IECEx certification scheme and to view the BEKA associate certificates, please visit www.iecex.com

A1.1 IECEx Certificate of Conformity

The BA326C loop powered indicator has been issued with an IECEx Certificate of Conformity number IECEx ITS 08.0003X which specifies the following certification code and marking:

Ex ia IIC T5 Ga
Ta = -40°C to 60°C

The IECEx intrinsic safety parameters are the same as the ATEX & UKEX safety parameters.

The BA326C IECEx Certificate number has an X suffix indicating that special conditions for safe use apply when installed in Zone 0.. These are explained below.

CAUTION installation in Zone 0

When installed in a Zone 0 potentially explosive atmosphere, the indicator shall be installed such that even in the event of rare incidents, an ignition source due to impact or friction between the aluminium enclosure at the rear of the instrument mounting panel and iron/ steel is excluded.

The IECEx certificate may be downloaded from www.beka.co.uk, www.iecex.com or requested from the BEKA sales office.

A1.2 Installation

The IECEx, ATEX & UKEX certificates specify the same safety parameters and installation requirements. Both are defined by IEC / EN 60079-14 *Electrical installations design, selection and erection*. The ATEX & UKEX system design and installation requirements specified in sections 4 and 5 of this manual may therefore be used for IECEx installations.

For all installations the local Code of Practice should be consulted.

Appendix 2

Increasing the indicator's voltage drop

Some 4/20mA galvanic isolators, such as those with short and / or open circuit detection, may not function correctly when driving a small load, such as a single loop powered indicator which only introduces a 1.1V drop.

If the chosen isolator requires a load greater than 1.1V to function correctly, this can be achieved by connecting a resistor in series with the indicator as shown in Fig 19.
The value fitted will depend upon the required load, the tolerance and temperature coefficient are not critical. A 247Ω resistor will increase the load from 1.1 to 6.1V. The resistor should be a carbon or metal film component, not wire wound, with a power rating of at least 1W at 70ºC. It should be positioned close to the terminals, but away from the instrument's rear panel.

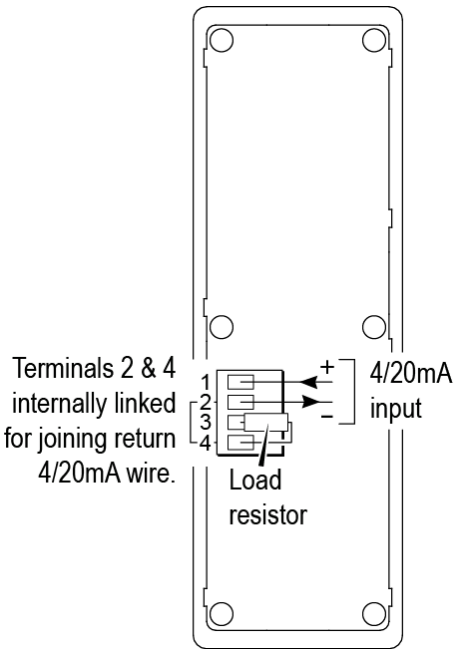

Fig 19 Load resistor connection

Appendix 3

EU Declaration of Conformity

This certificate is issued for electrical apparatus BA326C

Description
BA326C is a panel mounting, intrinsically safe 4/20mA loop powered combined analogue and digital indicator.

Manufactured by
BEKA associates Ltd, Old Charlton Road, Hitchin, Herts. UK. SG5 2DA

Council Directives this equipment complies with:

2014/34/EU (ATEX Directive)

Relating to equipment and protective systems intended for use in potentially explosive atmospheres.

Provisions of the Directive fulfilled by the equipment:

Group II Category 1G Ex ia IIC T5 Ga Ta -40°C to +60°C

Notified Body for EU-Type Examination and production
INTERTEK ITALIA SPA 2575 Via Guido Miglioli, 2/A 20063 Cernusco sul Naviglio (MI) Italy

EU-Type Examination Certificate
ITS99ATEX2009X issue 2 Dated 11/03/2014

Standards used:
EN 60079-0:2012; EN 60079-11:2012 and EN 60079-26:2007
Compliant with EN IEC 60079-0:2018 and EN 60079-11:2012+A11:2013

2014/30/EU (EMC Directive)

Standards used:
EN 61326-1:2021

2011/65/EU (RoHS Directive) relating to hazardous substances in electronic and electrical equipment.

2015/863/EU additional substances added by amending Annex II to Directive 2011/65/EU as regards the list of restricted substances.

CE mark first affixed in 2000

Authorised Signatory:

Issue 13 18th August 2021
Issue 14 19th Jan 2023

Olivier Lebreton CEng MIET
Managing Director

BEKA associates Ltd. Old Charlton Road, Hitchin, SG5 2DA UK
Telephone +44 (0) 1462 438301 Fax +44 (0) 1462 453971
e-mail sales@beka.co.uk www.beka.co.uk