BA444DF-P
PROFIBUS PA
Intrinsically safe
Field mounting
8 variable
Fieldbus Indicator

Issue 10

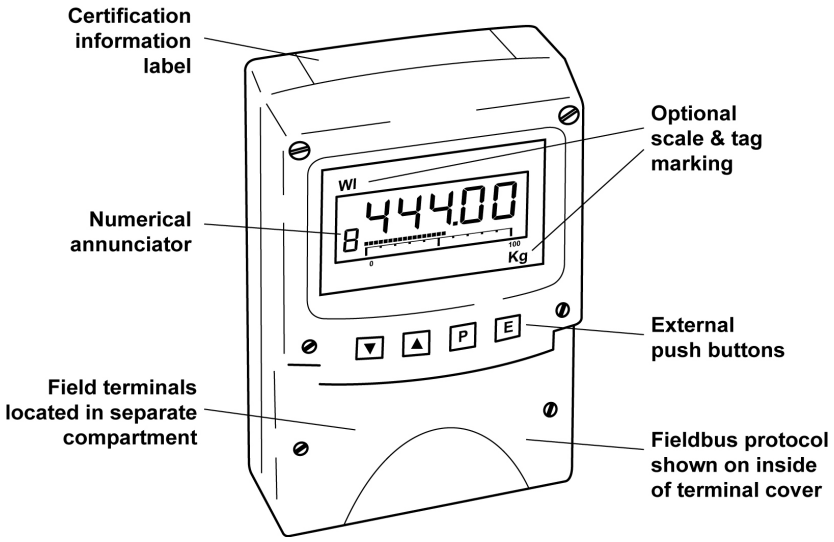

Issue: 10
22nd October 2025

CONTENTS

1. Description
- 1.1 Documentation

2. Operation
- 2.1 Error messages

3. Intrinsic Safety Certification
- 3.1 ATEX & UKEX certification
- 3.2 Ex ia Zones, gas groups and T rating
- 3.3 Ex ic Zones, gas groups and T rating
- 3.4 Fieldbus connection
- 3.5 Certification label Information

4. **System Design for Hazardous Area**
- 4.1 FISCO systems
- 4.2 Ex ia entity systems
- 4.3 Ex ic entity systems

5. Installation
- 5.1 Location
- 5.2 Installation procedure
- 5.3 EMC

6. Configuration
- **6.1** Configuration menus
- **6.2** Node configuration menu
  - **6.2.1** Enter fieldbus address
  - **6.2.2** Access code
  - **6.2.3** Change from node to listener
  - **6.2.4** Reset to node factory defaults
- **6.3** Listener configuration menu
  - **6.3.1** Access
  - **6.3.2** Summary of configuration functions.
- **6.4** Description of listener menu functions
  - **6.4.1** Scan fieldbus segment
  - **6.4.2** List configured input parameters.
  - **6.4.3** Enter address & display parameters.
  - **6.4.4** Enable selected input
  - **6.4.5** Enter source address
  - **6.4.6** Enter destination address
  - **6.4.7** Enter Index
  - **6.4.8** Decimal point position
  - **6.4.9** Configuration of bargraph
  - **6.4.10** Scale numeric display
  - **6.4.11** Access code for listener configuration menu.
  - **6.4.12** Change from fieldbus listener to fieldbus node.
  - **6.4.13** Reset to listener factory defaults.

7. Maintenance
- 7.1 Fault finding during commissioning
- 7.2 Fault finding after commissioning
- 7.3 Servicing
- 7.4 Routine maintenance
- 7.5 Guarantee
- 7.6 Customer comments

8. Accessories
- 8.1 Scale and Tag marking
- 8.2 Tag plate
- 8.3 Pipe mounting kits

Appendix 1
ATEX & UKEX dust certification

Appendix 2
FM Approval for use in the USA and cFM Approval for use in Canada.

Appendix 3
IECEx certification

Appendix 4
EU Declaration of Conformity

The BA444DF-P is CE marked to show compliance with the European Explosive Atmospheres Directive 2014/34/EU and the European EMC Directive 2014/30/EU.
It is also UKCA marked to show compliance with UK statutory requirements Equipment and Protective Systems Intended for Use in Potentially Explosive Atmospheres Regulations UKSI 2016:1107 (as amended) and with the Electromagnetic Compatibility Regulations UKSI 2016:1091 (as amended).

1. DESCRIPTION

The BA444DF-P fieldbus indicator is an intrinsically safe, PROFIBUS PA instrument, that may be configured as a fieldbus node or as a fieldbus listener. It can display up to eight fieldbus process variables on a five digit LCD and a 31 segment analogue bargraph. The instrument is bus powered so no additional power supply is required and has PROFIBUS PA User Organisation approval, certificate Z01505.

Fieldbus node configuration may be performed by either a User PRM data download or by a DPV1 configurator, and if required, the instrument address may be entered via the front panel push buttons.

When configured as a fieldbus listener, the BA444DF-P is not visible to the fieldbus host and can only be configured using the push buttons on the front of the instrument.

Housed in a robust IP66 glass reinforced polyester (GRP) enclosure with a toughened glass window, the BA444DF-P is surface mounting, or may be pipe mounted using one of the accessory kits.

The instrument has IECEx, ATEX and UKEX intrinsic safety certification for use in explosive gas and combustible dust atmospheres. IECEx, ATEX & UKEX dust certification is an option – see Appendix 1.

For use in the USA and Canada, the BA444DF-P is available with intrinsic safety and nonincendive FM and cFM Approval – see Appendix 2.

For international applications, all versions of the BA444DF-P PROFIBUS PA indicator have IECEx intrinsic safety approval - see Appendix 3.

The instrument's communication protocol is shown on a label inside the terminal cover. The '-P' order code suffix also indicates the protocol but is not shown on the instrument certification label. There is an alternative version of the fieldbus display, order code BA444DF-F for use on FOUNDATION™ fieldbus networks.

1.1 Documentation

This instruction manual describes ATEX & UKEX system design and installation of the BA444DF-P PROFIBUS PA indicator.

System design information for non-ATEX and dust approvals is shown in appendices to this manual.

2. OPERATION

The BA444DF-P indicator can display up to eight pre-configured PROFIBUS PA process variables designated in-1 to in-8. The operator can select which variable is displayed using the ▼ or ▲ push buttons which scroll the display through the eight inputs. A numeric annunciator on the left hand side of the display shows which of the eight inputs is currently being displayed.

2.1 Error messages

'no ConF'	No inputs have been configured or are enabled.
'no dAtA'	No data is being received with the current configuration.

3. INTRINSIC SAFETY CERTIFICATION

3.1 ATEX & UKEX certification

The BA444DF-P fieldbus indicator has Ex ia FISCO and Ex ia entity parameter certification, plus Ex ic entity parameter certification for use in Zone 2 with high supply voltages.

The fieldbus indicator carries the EU community CE mark and the UKCA mark. Subject to local codes of practice it may be installed in any of the European Economic Area (EEA) member countries and in the UK.

This instruction manual describes ATEX & UKEX installations in explosive gas atmospheres conforming with EN 60079-14 *Electrical Installations design, selection and erection.* When designing systems the local Code of Practice should be consulted.

For use in the presence of combustible dust, please refer to Appendix 1.

3.2 Ex ia Zones, gas groups and T rating

The BA444DF-P has Group II Category 1G Ex ia IIC T4 Ga Ta = –40 to 70°C FISCO and entity parameter approval. When connected to a suitable certified system the BA444DF-P may be installed in:

Zone 0 explosive gas air mixture continuously present.

Zone 1 explosive gas air mixture likely to occur in normal operation.

Zone 2 explosive gas air mixture not likely to occur, and if it does will only exist for a short time.

Be used with gases in groups:

Group A propane
Group B ethylene
Group C hydrogen

In gases which may be used with equipment having a temperature classification of:

T1 450°C
T2 300°C
T3 200°C
T4 135°C

At an ambient temperature between –40 and +70°C.

3.3 Ex ic Zones, gas groups and T rating

The BA444DF-P also has Group II Category 3G Ex ic IIC Gc T4 Ta = –40 to 70°C entity parameter approval with a higher Ui input voltage than the Ex ia approval. When connected to a suitable certified system the BA444DF-P may be installed in:

Zone 2 explosive gas air mixture not likely to occur, and if it does will only exist for a short time.

Be used with gases in groups:

Group A propane
Group B ethylene
Group C hydrogen

In gases which may be used with equipment having a temperature classification of:

T1 450°C
T2 300°C
T3 200°C
T4 135°C

At an ambient temperature between –40 and +70°C.

Note: the guaranteed operating temperature range of the BA444DF-P Fieldbus Indicator is –20 to +70°C

Ex ia and Ex ic entity certification plus FISCO certifiation allows the BA444DF-P to be installed in all Zones and to be used with most common industrial gases.

3.4 Fieldbus connection

The BA444DF-P Indicator is powered and communicates via the fieldbus which is connected to terminals 1 and 2. These are non-polarised, comply with the Fieldbus Intrinsically Safe Concept (FISCO) and have separate Ex ia and Ex ic entity input parameters as shown below:

		FISCO	Ex ia entity	Ex ic entity
Ui	=	17.5V	22.0V	32V
Ii	=	380mA	250mA	125mA
Pi	=	5.32W	1.2W	1W

3.5 Certification Label Information

The certification information label is fitted in a recess on the top outer surface of the enclosure. It shows details of the IECEx, ATEX and UKEX certifications, a statement that the instrument is a FISCO Field Device, plus BEKA associates name and location. . The label for some versions of the instrument will also contain non-European certification information.

The instrument serial number and year of manufacture are recorded on a separate label inside the terminal compartment.

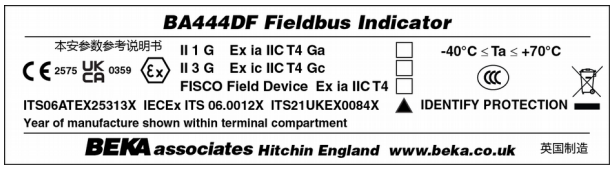

The label includes boxed areas which should be marked by the installer to show which of the three certifications is being used.

4. SYSTEM DESIGN FOR HAZARDOUS AREAS

4.1 FISCO Systems

The BA444DF-P fieldbus indicator may be connected to any ATEX or UKEX certified FISCO compliant fieldbus segment, providing the segment can supply the additional 13mA required to operate the instrument.

Fig 1 shows a typical fieldbus segment. To comply with FISCO requirements, the power supply, terminators, field devices and the interconnecting cables must conform with EN 60079-11.

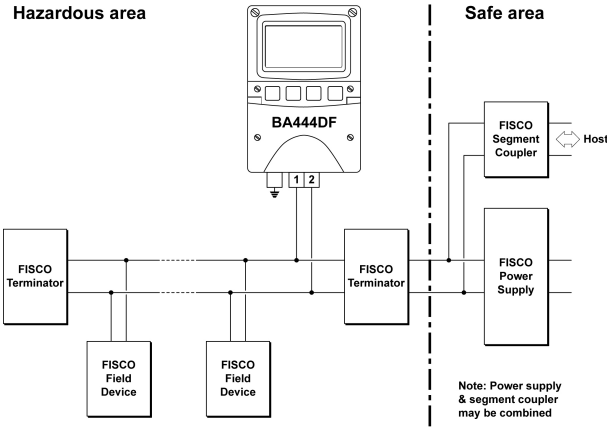

Fig 1 FISCO fieldbus system

4.2 Ex ia entity systems

The BA444DF-P Fieldbus Indicator has Ex ia certification with entity parameters for applications in Zone 0, 1 and 2.

The BA444DF-P Fieldbus Indicator may be connected to any intrinsically safe segment providing:

The device powering the fieldbus segment is ATEX Ex ia certified for Zone 0, 1 or 2 applications, or Ex ib certified for application in Zone 1 or 2, or Ex ic certified for applications in Zone 2. The output parameters of the segment should be equal to or less than:

Uo = 22V dc
Io = 250mA dc
Po = 1.2W

The segment can provide an additional 13mA to power the Fieldbus Indicator.

The equivalent capacitance Ci of the BA444DF-P Fieldbus Indicator is zero and the equivalent inductance is insignificant. Therefore these BA444DF-P parameters do not need to be considered.

4.3 Ex ic entity systems

The BA444DF-P Fieldbus Indicator also has Ex ic certification with entity parameters for applications in Zone 2. The higher Ui voltage allows the indicator to be used with segment couplers powered by Ex e or Power-i fieldbus trunks.

When mounted in Zone 2 the BA444DF-P Fieldbus Indicator may be connected to any intrinsically safe segment providing:

The device powering the fieldbus segment is ATEX Ex ia, ib or ic certified and has output parameters equal to or less than:

Uo = 32V dc
Io = 125mA dc
Po = 1W

The segment can provide an additional 13mA to power the Fieldbus Indicator.

The equivalent capacitance Ci of the BA444DF-P Fieldbus Indicator is zero and the equivalent inductance is insignificant. Therefore these BA444DF-P parameters do not need to be considered.

5. INSTALLATION

5.1 Location

The BA444DF-P PROFIBUS PA indicator is housed in a robust IP66 glass reinforced polyester (GRP) enclosure incorporating an armoured glass window and stainless steel fittings. It is suitable for exterior mounting in most industrial environments, including offshore and wastewater treatment installations. Please consult BEKA associates if high vibration is anticipated.

The BA444DF-P enclosure is surface mounting. Accessory kits described in sections 8.3 of this manual enable the instrument to be mounted onto a vertical or horizontal pipe.

The field terminals and the two mounting holes are located in a separate compartment with a sealed cover allowing the instrument to be installed without exposing the display assembly.

The BA444DF-P earth terminal is connected to the carbon loaded GRP enclosure. If this enclosure is not bolted to a post or structure connected to the plant potential equalising network, the instrument's earth terminal should be connected to the potential equalising network as recommenced in EN 60079-14.

The BA444DF-P enclosure is supplied with a bonding plate to ensure electrical continuity between the three conduit / cable entries.

5.2 Installation Procedure

Fig 2 illustrates the instrument installation procedure.

a. Remove the instrument terminal cover by unscrewing the two captive 'A' screws.

b. Mount the instrument on a flat surface and secure with two M6 screws through the 'B' holes. Alternatively use one of the mounting kits described in section 8.3

c. Remove the temporary hole plug and install a cable gland or conduit entry with required ingress protection. If more than one entry is required, replace one or both IP66 stopping plugs with a cable gland or conduit entry having the required ingress protection.

d. Connect the field wiring to the terminals as shown in Fig 3.

e. Replace the instrument terminal cover and evenly tighten the two 'A' screws.

CAUTION installation in Zone 0

When installed in a Zone 0 potentially explosive atmosphere requiring EPL Ga apparatus, the instrument shall be installed such that even in the event of rare incidents, an ignition source due to impact or friction between the aluminium label and iron/steel is excluded.

No special conditions apply when the indicator is installed in Zone 1 or in Zone 2.

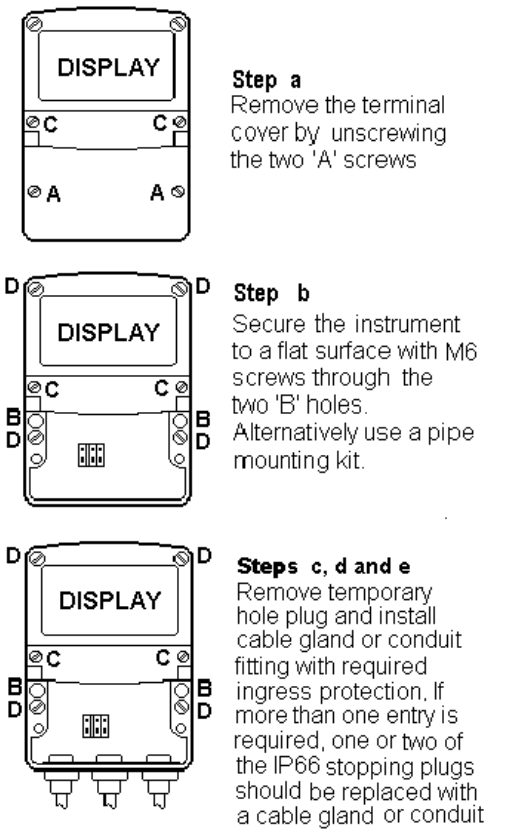

Fig 2 BA444DF-P installation procedure

5.3 EMC

The BA444DF-P complies with the European EMC Directive and with the UK statutory requirements. For specified immunity, all wiring should be in screened twisted pairs with the screens earthed at one point in the safe area.

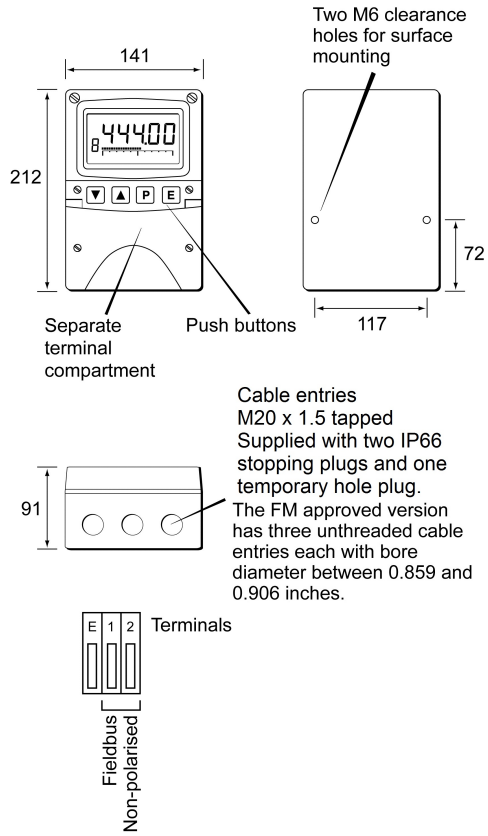

Fig 3 Dimensions and terminal connections

6. CONFIGURATION

The BA444DF-P 8 variable PROFIBUS PA PA indicator may be configured as a fieldbus node or as a fieldbus listener. When used as a fieldbus node the indicator is configured via the fieldbus host although the instrument address may be entered via the front panel push buttons using the menu shown in Fig 4. For detailed node conditioning information please refer to the BEKA PROFIBUS PA Display – Fieldbus Interface Guide which may be downloaded from the BEKA website www.beka.co.uk

As a fieldbus listener, the BA444DF-P is not visible to the fieldbus host and can only be configured via the front panel push buttons using the menu shown in Fig 6.

Throughout this manual the four BA444DF-P push buttons are identified ***P*** ***E*** ▼ ▲ and legends displayed by the instrument are shown within inverted commas e.g. 'CodE' and 'Enb'. **6.1 Configuration menus**

The configuration menus are separated into two sections, fieldbus node and fieldbus listener. Both contain the 'tYPE' function that enables transfer between the two. Unless otherwise requested when ordered, all PROFIBUS PA BA444DF-P instruments are supplied as a fieldbus node with default configuration but can easily be reconfigured on-site.

6.2 Node configuration menu

The node configuration menu is shown in Fig 4. Access to the menu is obtained by operating the ***P*** and ***E*** buttons simultaneously. If the BA444DF-P is not protected by an access code the first parameter 'Addr' will be displayed. If the instrument is protected by an access code, 'CodE' will be displayed first. Pressing ***P*** will allow the four digit security code to be entered digit by digit using the ▼ or ▲ button to adjust the flashing digit and ***P*** to move control to the next digit. When the correct code has been entered, pressing ***E*** will cause the first parameter 'Addr' to be displayed. If an incorrect code is entered, or no button is pressed for ten seconds, the BA444DF-P will automatically return to the display mode.

6.2.1 Enter fieldbus address 'Addr'

This function enables the fieldbus address of the BA444DF-P to be entered via the push buttons. Select 'Addr' in the node menu using the ▼ or ▲ button and press ***P*** to enter the function. This will reveal the existing three digit decimal address with the left hand digit flashing which may be changed by operating the ▼ or ▲ button. When set as required operating the ***P*** button will transfer control to the next digit that may be adjusted in the same way. When all digits are set as required operating the ***E*** button will enter the new address and the indicator will restart in the display mode after completing the initialisation sequence. If the address is not changed, operating the ***E*** button will return the display to the 'Addr' prompt in the node configuration menu.

6.2.2 Access code for configuration menu 'CodE'

Access to the node configuration menu may be protected by a four digit security code which must be entered to gain access. New instruments are supplied configured with the default code 0000 which disables this protection and allows unrestricted access to the configuration menu.To enter a new access code select 'CodE' in the node configuration menu by operating the ▼ or ▲ button. To enter the function press ***P*** which will reveal the current access code with one digit flashing. The code may be changed using the ▼ or ▲ button to adjust the flashing digit and the ***P*** button to move control to the next digit. When the required code has been selected, press ***E*** to enter the selection and return to the 'CodE' prompt in the configuration menu. The revised access code will be activated when the transmitter is returned to the display mode.

If the access code is lost please contact BEKA associates.

6.2.3 Change from node to listener 'tYPE'

This function enables the instrument to be changed from a fieldbus node to a fieldbus listener. Select 'tYPE' in the node configuration menu using the ▼ or ▲ button. To enter the function press ***P*** which will show that the instrument is configured as a fieldbus node, to change to a fieldbus listener press the ▼ or ▲ button which will toggle the display to 'LStnr' To prevent accidental changes this request must be confirmed by operating the ***P*** button and entering '5urE'. The instrument will display '0000' with the first digit flashing, using the ▼ or ▲ button set the flashing digit to '5' and press the ***P*** button to move control to the next digit which should be set to 'u'. When the four letters of '5urE' have been entered, operating the ***E*** button will cause the instrument to restart as a fieldbus listener in the display mode.

CAUTION

All the instrument's node configuration information will be lost when it is changed from a fieldbus node to a fieldbus listener.

Please refer to the quick set-up procedure in the BEKA PROFIBUS PA Display – Fieldbus Interface Guide.

6.2.4 Reset the instrument to node factory defaults 'rESEt'

The BA444DF-P may be reset to the factory defaults that are shown below:

Security Code	0000 (disabled)
Device address	126

For each of the eight inputs:

Decimal point	XXX.XX
Bar Type	Left
Bar lower limit	0.0
Bar Upper limit	100.0
Gain	1.0
Offset	0.0

To reset the BA444DF-P select 'rESEt' in the configuration menu by operating the ▼ or ▲ button. To enter the function press ***P*** which will reveal '0000' with the left hand digit flashing. To prevent accidental use of this function, '5urE' must be entered to confirm that the instrument is to be reset.

Using the ▼ or ▲ button set the flashing digit to '5' and press the ***P*** button to move control to the next digit which should be set to 'u'. When the four letters of '5urE' have been entered operating the ***E*** button will reset the BA444DF-P to the factory defaults. Any existing configuration and addresses will be lost when the instrument is reset.

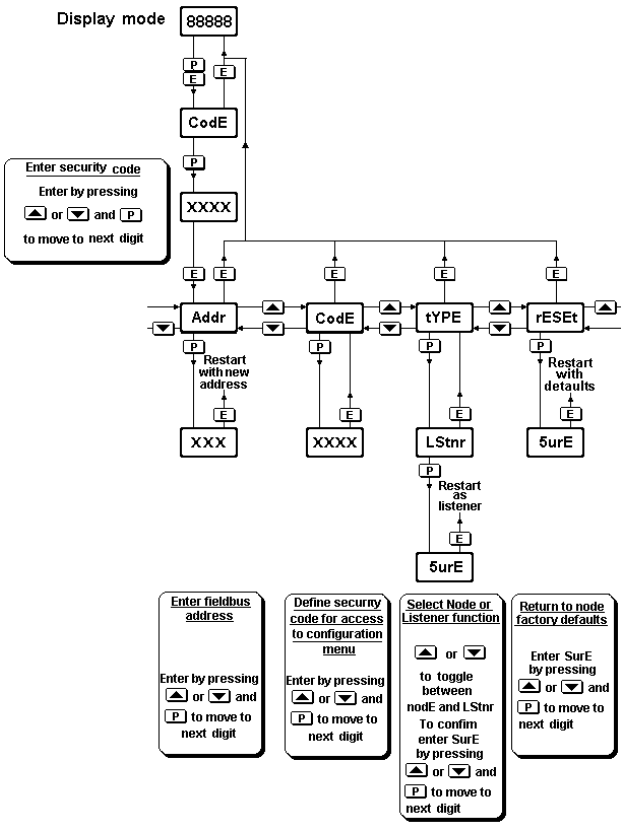

FIG 4 Node configuration menu

6.3 Listener configuration menu

When used as a fieldbus listener the BA444DF-P is not visible to the fieldbus host and can only be configured using the front panel push buttons shown in Fig 3.

The listener configuration menu is separated into three sections, 'SCAn', 'LISt' and 'Edit', plus three housekeeping functions 'CodE', 'tYPE' and 'rESEt' as shown in Fig 6.

'SCAn' is the simplest method of configuration if the addresses of the data sources to be displayed by the BA444DF-P listener are not known.

In the 'SCAn' function pressing the ***P*** button causes the BA444DF-P listener to search the fieldbus segment to which it is connected for all data sources. The hexadecimal device addresses for each data source are displayed as shown in Fig 5.

The ▼ and ▲ push buttons scroll the display through all the data sources on the segment showing the source and destination address for each one. To aid identification, operating the ***P*** button will preview the value of the data at the selected addresses with a zero index i.e. the first five bytes in the data string. If the format of the data is not DS-33 (status + float) 'no dAt' will be displayed. The selected source and destination addresses may be allocated to one of the eight BA444DF-P listener inputs in-1, to in-8. Operating the ***P*** button will reveal the current listener input which may be changed using the ▼ or ▲ push button, when set as required, operating the ***E*** push button will enter the allocation. If the process variable to be displayed is located further along the data stream i.e. has an index greater than 5, the required index must be entered via the index 'ind' function in the edit sub-menu.

A worked configuration example illustrating this procedure is contained in the Quick Set-up section of the PROFIBUS PA Interface Guide.



Fig 5 Device Addresses

If the source and destination addresses and index of the process variable to be displayed by the BA444DF-P listener are known, they may be directly entered via the edit sub-menu. This sub-menu also provides full control of both the numeric and bargraph display parameters.

6.3.1 Access

Access to the listener configuration menu is obtained by operating the ***P*** and ***E*** buttons simultaneously. If the BA444DF-P listener configuration menu is not protected by an access code the first parameter 'SCAn' will be displayed. If the BA444DF-P is protected by an access code, 'CodE' will be displayed first. Pressing ***P*** will allow the four digit security code to be entered digit by digit using the ▼ or ▲ button to adjust the flashing digit and ***P*** to move control to the next digit. When the correct code has been entered, pressing ***E*** will cause the first parameter 'SCAn' to be displayed. If an incorrect code is entered, or no button is pressed for ten seconds, the indicator will automatically return to the display mode.

Section 6.3.2 contains a summary of each configuration function including a cross reference to a more detailed description.

6.3.2 Summary of listener configuration functions

Instrument display	Summary of function

'SCAn' **Scan fieldbus segment**
Identifies all data sources on the fieldbus segment to which the listener is connected and enables selected data to be allocated to one of the eight listener inputs in-1 to in-8.
See section 6.4.1

'LiSt' **List configured input parameters**
For each of the eight BA444DF-P listener inputs, in-1 to in-8 shows if the input is enabled, Source Address, Destination Address and the Index which have been allocated. Parameters can not be changed from within this function.
See section 6.4.2

'Edit' **Enter addresses and display parameters**
Sub-menu which allows known fieldbus device addresses to be entered and all display parameters adjusted for each of the eight fieldbus listener inputs.
See section 6.4.3

'Enb' **Enable selected input**
Enables each of the eight listener inputs in-1 to in-8 to be enabled or disabled without affecting any parameters.
See section 6.4.4

'SrC' **Enter Source Address**
Allows hexadecimal fieldbus device source address for each of the eight listener inputs in-1 to in-8 to be entered.
See section 6.4.5

'dSt' **Enter Destination Address**
Allows hexadecimal fieldbus device destination address for each listener input in-1 to in-8 to be entered.
See section 6.4.6

'ind' **Enter Index**
Allows hexadecimal index for specified fieldbus source address to be entered for each listener input in-1 to in-8.
See section 6.4.7

'dP' **Decimal point position**
Defines position of displayed decimal point for each listener input in-1 to in-8.
See section 6.4.8

'bAr' **Configuration of bargraph**
Defines the bargraphs justification and the digital display at which the bargraph is zero and full scale for each listener input in-1 to in-8.
See section 6.4.9

'SCALE' **Scale numeric display**
Applies zero offset and scale factor to the numeric display for each listener input in-1 to in-8.
See section 6.4.10

'CodE' **Access code for listener configuration menu**
Enters a four digit security access code for configuration menu. Default code 0000 disables this function.
See section 6.4.11

'tYPE' **Change from listener to node**
Enables the instrument to be conditioned as a fieldbus listener or a fieldbus node.
See section 6.4.12

'rESEt' **Reset to listener factory defaults**
Returns the BA444DF-P listener to factory defaults.
See section 6.4.13

6.4 Description of listener menu functions

This section contains a detailed description of each function in the listener configuration menu. It should be read in conjunction with Fig 6.

6.4.1 Scan fieldbus segment 'SCAn'

If the Device Addresses of a data source are not known, the 'SCAn' function provides a simple way to identify them. This function scans the fieldbus segment to which the BA444DF-P listener is connected and identifies all the data sources. To aid identification the value of the process variable with a zero index i.e. the first five bytes in the data string at the address may be pre-viewed.

The BA444DF-P listener only supports DS-33 formatted data (status+float) which is the usual format for analogue process variables. The 'SCAn' function will identify, irrespective of format, all data sources on the segment whose destination address is five bytes long. When pre-viewed, non DS-33 formatted data will produce a 'no dAt' error message.

'SCAn' is the first function displayed when entering the configuration menu, or it may be selected from within the menu by operating the ▼ or ▲ button. To scan the fieldbus segment to which the listener is connected for all data sources press ***P*** which will reveal the hexadecimal source address and destination address of the first data source found as shown in Fig 5. If there is more than one data source, operating the ▼ or ▲ button will scroll though all of them.

If there are no data sources on the fieldbus segment the BA444DF-P listener will display 'noSrC'.

When the source and destination addresses of a data source are displayed, to aid identification the value of the process variable with a zero index i.e. the first five bytes in the data string may be pre-viewed by operating the ***P*** button. If this confirms that it is the required address, it may be allocated to one of the eight BA444DF-P listener inputs in-1 to in-8. To select the required listener input, press ***P*** which will display the first input in-1. Operating the ▼ or ▲ button will scroll the display through the other inputs. When the required input is displayed pressing ***E*** will allocate the selected data source address to the selected input and return the display to the source and destination addresses from which another data source address may be selected. When a data source address is allocated to a listener input any previous allocation will be overwritten.

If the required process variable has an index above 5 i.e. it is not the first five bytes in the data string, the required index should be entered via the 'ind' function in the Edit sub-menu which is described in section 6.4.7

6.4.2 List configured input parameters 'LiSt'

The 'LiSt' function enables the Source Address, Destination Address and Index allocated to each listener input to be viewed without danger of it being accidentally changed.

The 'LiSt' function may be selected from within the menu by operating ▼ or ▲ button. To enter the function press ***P*** which will display the listener input currently selected in the display mode, other inputs may be selected using the ▼ or ▲ button. Operating the ***P*** button will cause the following parameters for the selected input to be displayed sequentially:

Display	Explanation
'Enb :Y or N'	Input Enabled yes or no
'SrC :00'	Source Address
'dSt :00'	Destination Address
'ind :00'	Index

The display then automatically returns to the selected BA444DF-P listener input from where another input may be selected.

If one of the eight BA444DF-P Listener's inputs in-1 to in-8 has not had a Source Address, Destination Address and Index allocated to it, 'LiSt' will show both addresses as 'FF' and the index 'ind' as '00'.

6.4.3 Enter address & display parameters 'Edit'

The 'Edit' sub-menu may be selected from within the menu by operating ▼ or ▲ button. To enter the function press ***P*** which will display the listener input currently selected in the display mode, other listener inputs may be selected using the ▼ or ▲ button. When the required input has been selected operating the ***P*** button will enter the edit sub-menu at 'Enb' for the selected input.

6.4.4 Enable selected input 'Enb'

'Enb' turns the listener input selected in the Edit function on or off without affecting the conditioning. To enter the function press ***P*** which will reveal whether the selected input is 'on' or 'oFF'. Operating the ▼ or ▲ buttons will toggle between the two conditions. When set as required operating the ***E*** button will enter the selection and return to the 'Enb' prompt in the edit sub-menu.

6.4.5 Enter source address 'SrC'
This function allows a known fieldbus device source address to be entered and allocated to the listener input selected in the edit function. To enter the function press ***P*** which will reveal the existing two digit hexadecimal address with one digit flashing which may be changed by operating the ▼ or ▲ button. When set as required operating the ***P*** button will transfer control to the second digit that may be adjusted in the same way. When both digits are set as required operating the ***E*** button will enter the selection and return to the 'SrC' prompt in the edit sub-menu.

6.4.6 Enter destination address 'dSt'
This function allows a known fieldbus device destination address to be entered and allocated to the listener input selected in the Edit function. To enter the function press ***P*** which will reveal the existing two digit hexadecimal address with one digit flashing which may be changed by operating the ▼ or ▲ button. When set as required operating the ***P*** button will transfer control to the second digit that may be adjusted in the same way. When both digits are set as required operating the ***E*** button will enter the selection and return to the 'dSt' prompt in the edit sub-menu.

6.4.7 Enter Index 'ind'
Index defines the location of the required process variable in the data string. The 'ind' function allows a known Index for the selected fieldbus Source Address to be entered and allocated to the BA444DF-P listener input selected in the Edit function. The data location is manufacturer specific and can not be automatically determined; the device documentation should therefore be consulted. To enter the function press ***P*** which will reveal the existing two digit hexadecimal address with one digit flashing which may be changed by operating the ▼ or ▲ button. When set as required operating the ***P*** button will transfer control to the second digit that may be adjusted in the same way. When both digits are set as required operating the ***E*** button will enter the selection and return to the 'ind' prompt in the edit sub-menu.

6.4.8 Decimal point position 'dP'
This defines the position the decimal point in the numeric display. To enter the function press ***P*** which will reveal the existing decimal point position. Operating the ▼ or ▲ button will move the decimal point to the required position, omit it, or activate all the decimal points which automatically provides maximum resolution in the display mode irrespective of the numeric value.
When positioned as required, operating the ***E*** button will enter the selection and return to the 'dP' prompt in the edit sub-menu.

6.4.9 Configuration of bargraph display 'bAr'
This function contains three sub-functions that enable the bargraph, justify its position and define the relationship between the bargraph and the instrument's numeric display.

Sub-function 'b.tYPE' enables the bargraph to be left, centre or right justified, or to be turned off. Sub-functions 'bArLo' and 'bArhi' define the listener's numeric display at which the bargraph starts and is at full scale.
The 'bAr' function may be selected from within the edit sub-menu by operating the ▼ or ▲ button. To enter the function press ***P*** which will display the 'b.tYPE' sub-function, pressing ***P*** again will reveal the existing bargraph justification. The ▼ or ▲ button will scroll through the four options, when the required justification is displayed, pressing ***E*** will enter the selection and return the display to the 'b.tYPE' prompt in the edit sub-menu from which 'bArLo' may be selected using the ▼ or ▲ button.

'bArLo' defines the listener's numeric display at which the bargraph starts, to enter the function press ***P*** which will reveal the existing setting. The display may be changed using the ▼ or ▲ button to adjust the flashing digit and the ***P*** button to move control to the next digit. When the required starting display has been selected, press ***E*** to return to the 'bArLo' prompt in the edit sub-menu from which the 'bArHi' function may be selected.

'bArHi' defines the listener's numeric display at which the bargraph is full scale, to enter the function press ***P*** which will reveal the existing setting. The display may be changed using the ▼ or ▲ button to adjust the flashing digit and the ***P*** button to move control to the next digit. When the required display has been selected, press ***E*** twice to enter the new values and return to the 'bAr' prompt in the edit sub-menu.

Note: If the 'dP' function has been set to provide automatic maximum resolution irrespective of the displayed value, it may be necessary to manually position the decimal point before adjusting 'bArLo' or 'bArHi'. This can be achieved by repeatedly operating the ***P*** button until the activated decimal point flashes, the decimal point can then be positioned using either the ▼ or ▲ button. Pressing the ***P*** button again will return control to one of the digits.

6.4.10 Scale numeric display 'SCALE'
A scaling factor 'Gain' and an offset 'oFFSt' may be applied to the fieldbus process variable using this function, thus allowing the listener to display the fieldbus process variable in alternative units.

The ‘SCALE’ function may be selected from within the edit sub-menu by operating the ▼ or ▲ button. To enter the function press ***P*** which will display the ‘GAin’ sub-function, pressing ***P*** again will reveal the existing gain with one digit flashing. This flashing digit may be changed by operating the ▼ or ▲ button; when adjusted the ***P*** button will move control to the next digit or to the decimal point which can be positioned using the ▼ or ▲ button. When ‘GAin’ has been set to the required value operating the ***E*** button will enter the selection and return to the ‘GAin’ prompt in the sub-menu from where the ‘oFFSt’ function can be selected using the ▼ or ▲ button.

To enter the ‘oFFSt’ function press ***P*** which will reveal the existing offset with one digit flashing. Again the flashing digit may be changed by operating the ▼ or ▲ button and the ***P*** button will move control to the next digit or to the decimal point. When ‘oFFSt’ has been set to the required value operating the ***E*** button will enter the selection and return to the ‘oFFSt’ prompt in the sub-menu. Three operations of the ***E*** button will return to the ‘Edit’ function in the main configuration menu.

6.4.11 Access code for listener configuration menu ‘CodE’

Access to the listener configuration menu may be protected by a four digit security code which must be entered to gain access. New instruments are supplied configured with the default code 0000 which disables this protection and allows unrestricted access to the configuration menu.

To enter a new access code select ‘CodE’ in the configuration menu by operating the ▼ or ▲ button. To enter the function press ***P,*** this will reveal the current access code with one digit flashing. The code may be changed using the ▼ or ▲ button to adjust the flashing digit and the ***P*** button to move control to the next digit. When the required code has been selected, press ***E*** to enter the selection and return to the ‘CodE’ prompt in the configuration menu. The revised access code will be activated when the transmitter is returned to the display mode.

If the access code is lost please contact BEKA associates.

6.4.12 Change from fieldbus listener to fieldbus node ‘tYPE’

This function enables the BA444DF-P to be conditioned as a fieldbus node or as a fieldbus listener. To change the function of the instrument select ‘tYPE’ in the listener configuration menu using the ▼ or ▲ button and press ***P*** to enter which will show that the instrument is configured as a fieldbus listener.

To change to a fieldbus node press the ▼ or ▲ button which will toggle the display to ‘nodE’. To prevent accidental changes this request must be confirmed by operating the ***P*** button and entering ‘5urE’. The instrument will display ‘0000’ with the first digit flashing, using the ▼ or ▲ button set the flashing digit to ‘5’ and press the ***P*** button to move control to the next digit which should be set to ‘u’. When the four letters of ‘5urE’ have been entered, operating the ***E*** button will result in the instrument restarting in the display mode as a fieldbus node.

CAUTION

All the instrument’s listener configuration information will be lost when it is changed from a fieldbus listener to a fieldbus node.

6.4.13 Reset the listener to factory defaults ‘rESEt’

The BA444DF-P listener may be reset to the factory defaults that are shown below:

Security Code	0000 (disabled)

For each of the eight inputs:

Decimal point	XXX.XX
Bar Type	Left
Bar lower limit	0.0
Bar Upper limit	100.0
Gain	1.0
Offset	0.0

To reset the BA444DF-P listener select ‘rESEt’ in the configuration menu by operating the ▼ or ▲ button. To enter the function press ***P,*** this will reveal ‘0000’ with the left hand digit flashing. To prevent accidental use of this function, ‘5urE’ must be entered to confirm that the instrument is to be reset.

Using the ▼ or ▲ button set the flashing digit to ‘5’ and press the ***P*** button to move control to the next digit which should be set to ‘u’. When the four letters of ‘5urE’ have been entered operating the ***E*** button will reset the BA444DF-P to the factory defaults. Any existing configuration and addresses will be lost when the listener is reset.

7. MAINTENANCE

7.1 Fault finding during commissioning

If a BA444DF-P fails to function during commissioning the following procedure should be followed:

Symptom	Cause	Check:
No Display	Instrument not correctly connected or powered.	Between terminals 1 & 2: FISCO 9 & 17.5V Ex ia 9 to 22V Ex ic 9 & 32V
Displays 'no ConF'	No inputs are enabled.	Configuration of each input.
Displays 'no dAtA'	No data being received with the current configuration.	Addresses and Index are correct. That data has DS-33 format.
Display shows a static value of 99999 or -99999	Value over-range / under-range	Configuration. and decimal point position.
Display stays static with the word 'bad'.	Status of fieldbus variable has a quality of 'bad' or a fault state is active	Fieldbus configuration.
Bargraph scale stays OFF	Bargraph over-range / under-range	Bargraph configuration.
All display segments activated.	Display is initialising.	This is normal operation, after a few seconds the model number followed by the firmware version will be displayed prior to entering the display mode.

7.2 Fault finding after commissioning

ENSURE PLANT SAFETY BEFORE STARTING MAINTENANCE

Live maintenance is permitted on intrinsically safe equipment installed in a hazardous area, but only certified test equipment should be used unless a gas clearance certificate is available.

If a BA444DF-P fails after it has been functioning correctly, the table shown in section 7.1 may help to identify the cause of the failure.

If this procedure does not reveal the cause of the fault, it is recommended that the instrument is replaced.

7.3 Servicing

We recommend that faulty BA444DF-P PROFIBUS PA Indicators are returned to BEKA associates or to your local agent for repair.

7.4 Routine maintenance

The mechanical and electrical condition of the instrument should be regularly checked. Initially annual inspections are recommended, but the inspection frequency should be adjusted to suit the environmental conditions.

7.5 Guarantee

Instruments which fail within the guarantee period should be returned to BEKA associates or your local agent. It is helpful if a brief description of the fault symptoms is provided.

7.6 Customer comments

BEKA associates is always pleased to receive comments from customers about our products and services. All communications are acknowledged and whenever possible, suggestions are implemented.

8. ACCESSORIES

8.1 Scale and tag marking

BA444DF-P PROFIBUS PA Indicators are fitted with a blank escutcheon around the liquid crystal display. If specified when the instrument is ordered, this can be supplied printed with units of measurement and tag information, plus a scale for the horizontal bargraph. Alternatively, information may be added on-site via an embossed strip, dry transfer or a permanent marker.

To gain access to the display escutcheon remove the terminal cover by unscrewing the two 'A' screws which will reveal two concealed 'D' screws. Unscrew all four 'D' screws and carefully lift off the front of the instrument. The location of these screws is shown in Fig 2.

After adding the required legends, or fitting a new pre-printed self-adhesive escutcheon, ensure that the gasket is correctly positioned before reassembling the instrument enclosure.

8.2 Tag plate

The BA444DF-P can be supplied with a blank or custom laser marked stainless steel plate secured by two screws to the front of the instrument enclosure. This plate can accommodate:

1 row of 9 alphanumeric characters 10mm high

or 1 row of 11 alphanumeric characters 7mm high

or 2 rows of 18 alphanumeric characters 5mm high.

or 8 cells each containing units of measurement or identification for one of the 8 inputs.

1 °C TANK 1	2 % FULL TANK 1	3 °C TANK 2	4 % FULL TANK 2
5 mbar TANK 1	6 RPM TANK 1	7 mbar TANK 2	8 RPM TANK 2

Fig 7 Typical 8 cell tag plate

8.3 Pipe mounting kits

Two pipe mounting kits are available for securing the BA444DF-P to a horizontal or vertical pipe.

BA392D Stainless steel bracket secured by two worm drive hose clips for 60 to 80mm outside diameter pipes.

BA393 Heavy-duty stainless steel bracket secured by a single 'V' bolt. Will clamp to any pipe with an outside diameter between 40 and 80mm.

APPENDIX 1
ATEX & UKEX dust certification

A1.0 ATEX & UKEX dust certification
In addition to ATEX & UKEX certification permitting installation in explosive gas atmospheres which is described in the main section of this instruction manual, the BA444DF-P is available with optional ATEX & UKEX certification permitting use in the presence of combustible dusts. If dust certification is required it must be requested when the BA444DF-P fieldbus indicator is purchased.

CAUTION

Before installing a BA444DF-P fieldbus indicator in the presence of a combustible dust, ensure that the certification information label, which is located on the top of the instrument, specifies dust certification – see section A1.2

A1.1 Ex ia IIIC entity systems
The BA444DF-P Fieldbus Indicator has Group II Category 2D Ex ia IIIC T100ºC Db IP66 certification. Installations should comply with EN 60079-14 *Electrical installation design, selection and erection.*

The Fieldbus Indicator may be installed in:

Zone 21 explosive atmosphere in the form of a cloud of combustible dust in air is likely to occur occasionally in normal operation.

Zone 22 explosive atmosphere in the form of a cloud of combustible dust in air is not likely to occur in normal operation, but if it does occur, will only persist for a short period.

Be used with dusts having a Minimum Ignition Temperature of:

Dust cloud	150ºC
Dust layer on BA444DF-P up to 5mm thick	175ºC
Dust layer on BA444DF-P over 5mm thick.	Refer to EN 60079:14

At an ambient temperature between -20 and +60ºC The Indicator may be connected to any intrinsically safe segment providing:

The device powering the fieldbus segment should be Ex ia or ib certified for Zone 21 or 22 applications.

The output parameters should be equal to or less than:

Uo = 22V dc
Io = 250mA dc
Po = 1.2W

The segment can provide an additional 13mA to power the Fieldbus Indicator.

The equivalent capacitance Ci of the BA444DF-P Fieldbus Indicator is zero and the equivalent inductance is insignificant. Therefore these BA444DF-P parameters do not need to be considered.

A1.2 Ex ic IIIC entity systems
The BA444DF-P Fieldbus Indicator also has Ex ic IIIC certification for applications in Zone 22. The higher Ui voltage allows the indicator to be used with Power-i and intrinsically safe segment couplers powered from Ex e fieldbus trunks.

The Fieldbus Indicator may be installed in:

Zone 22 explosive atmosphere in the form of a cloud of combustible dust in air is not likely to occur in normal operation, but if it does occur, will only persist for a short period.

Be used with dusts having a Minimum Ignition Temperature of:

Dust cloud	150ºC
Dust layer on BA444DF-P up to 5mm thick	175ºC
Dust layer on BA444DF-P over 5mm thick.	Refer to EN 60079:14

At an ambient temperature between -20 and +60ºC The BA444DF-P Fieldbus Indicator may be connected to any intrinsically safe segment providing:

The device powering the fieldbus segment is ATEX Ex ia IIIC, ib IIIC or ic IIIC certified and has output parameters equal to or less than:

Uo = 32V dc
Io = 125mA dc
Po = 1W

The segment can provide an additional 13mA to power the Fieldbus Indicator.
The equivalent capacitance Ci of the BA444DF-P Fieldbus Indicator is zero and the equivalent inductance is insignificant. Therefore these BA444DF-P parameters do not need to be considered.

A1.3 Certification Label Information

The certification label is fitted in a recess on the top outer surface of the enclosure. It shows details of the ATEX & UKEX dust certification including the maximum surface temperature and ingress protection; a statement that the instrument is a FISCO Field Device, plus BEKA associates name and location. IECEx dust approval information is also shown, non-European certification information may also be included.

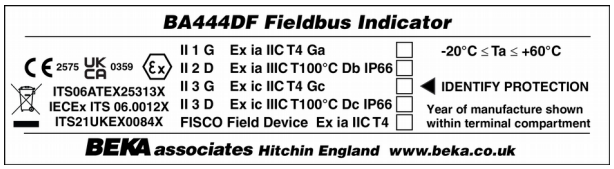

The label includes boxed areas which should be marked by the installer to show which of the certifications is being used.

The instrument serial number and date of manufacture are recorded on a separate label inside the terminal compartment.

A1.4 Installation & maintenance

The dust certification relies on the Fieldbus Indicator enclosure being dust-tight. Therefore the terminal cover should only be removed when dust can not enter the instrument enclosure. Before replacing the terminal cover ensure that the sealing gaskets are undamaged and are free from foreign bodies.

APPENDIX 2
FM Approval for use in the USA and cFM Approval for use in Canada

A2.0 Factory Mutual Approval

For installations in the USA and Canada, a version of the BA444DF-P is available with FM and cFM intrinsic safety and nonincendive approval, project identifications 3027031 and 3027031C. Copies of the Certificates of Compliance are available from BEKA associates sales office and www.beka.co.uk

The FM and cFM Approved version is identical to the ATEX version except the three M20 x 1,5 tapped cable entries are replaced by three plain unthreaded 22.25mm diameter entries. Approved hubs and glands are listed in note 6 of Intrinsically Safe Control Drawing CI410-12 and note 5 of Nonincendive Control Drawing CI410-13. The certification label on the FM and cFM Approved version includes ATEX gas certification information so that the BA444DF-P PROFIBUS PA indicator may be used in systems covered by either authority.

A2.1 Intrinsic safety approval

The BA444DF-P is approved to FM Class 3610 intrinsic safety standard for use in indoor and outdoor hazardous (classified) locations. Installations must comply with BEKA associates Control Drawing CI410-12, which is attached to this Appendix, ANSI/ISA RP12.06.01 'Installation of Intrinsically Safe Systems for Hazardous (Classified) Locations' and with the National Electrical Code ANSI/NFPA70.

The BA444DF-P has a T4 rating at ambient temperatures up to +70°C and may be used with the following gases and dusts:

Intrinsic Safety	
Division 1 or 2	
Class I	Group A & B Group C Group D
Class II	Group E, F & G
Class III	
Zone 0, 1 or 2	
Class 1	Group IIC Group IIB Group IIA

Canadian installations must comply with the Canadian Electrical Code C22.2 and with BEKA associates Control Drawing CI410-12, which is attached to this Appendix.

The FM and cFM entity parameters are identical to the ATEX parameters and, like the ATEX certification, confirm that the BA444DF-P complies with the FISCO Field Device requirements specified in IEC60079-27. The intrinsically safe system shown in Fig 1 of this manual may therefore be used for installations in the USA and Canada, providing the fieldbus power supply, terminators, Zener barriers and galvanic isolators are FM Approved for US installations and cFM or CSA Approved for Canadian installations. All installations must comply with BEKA associates Control Drawing CI410-12 .

FM and cFM Approvals also allows the BA444DF-P to be connected to non-FISCO systems using the entity concept – see section 3.2 of this manual.

A2.2 Nonincendive approval

The BA444DF-P is FM Class 3611 nonincendive approved allowing it to be installed in Division 2 indoor and outdoor hazardous (classified) locations without the need for Zener barriers or galvanic isolators. US installations must comply with the BEKA associates Control Drawing CI410-13, which is attached to this Appendix, and with the National Electrical Code ANSI/NFPA70.

Canadian nonincendive installations must comply with the Canadian Electrical Code C22.2 and with BEKA associates Control Drawing CI410-13, which is attached to this Appendix.

The FM and cFM Nonincendive Approvals also allow the BA444DF-P PROFIBUS PA indicator to be connected to any appropriately certified FNICO compliant fieldbus segment.

The BA444DF-P has a T4 rating at ambient temperatures up to +70ºC and may be used with the following gases and dusts:

Nonincendive	
Division 2	
Class I	Group A & B Group C Group D
Class II	Groups E, F & G
Class III	
Zone 2	
Class I	Group IIC Group IIB Group IIA

Iss.	Date	Modification	Ckd.	Appd.
1	28.03 2006	First release	.	.
2	15.09 2009	Provision for alternative instrument titles added.		

BEKA associates Hitchin England

company confidential, copyright reserved.

HAZARDOUS (CLASSIFIED) LOCATION

UNCLASSIFIED LOCATION

BA414DF LOCATIONS:
Class I, Division 1, Groups A, B,C, D
Class II, Division 1, Groups E, F & G
Class III
Class I, Zone 0, Group IIC

BA418CF LOCATIONS:
Class I, Division 1, Groups A, B,C, D
Class I, Zone 0, Group IIC

BA414DF and BA418CF

Terminals 1 & 2
These terminals comply with the Intrinsically Safe Concept (FISCO) defined by IEC 60079-27

Ui = 17.5V Uo = 0
Ii = 380mA dc Io = 0
Pi = 5.32W Po = 0
Ci = 0
Li = 8µH

and have the following Entity Parameters
Ui = 22Vdc Uo = 0
Ii = 250mA Io = 0
Pi = 1.2W Po = 0

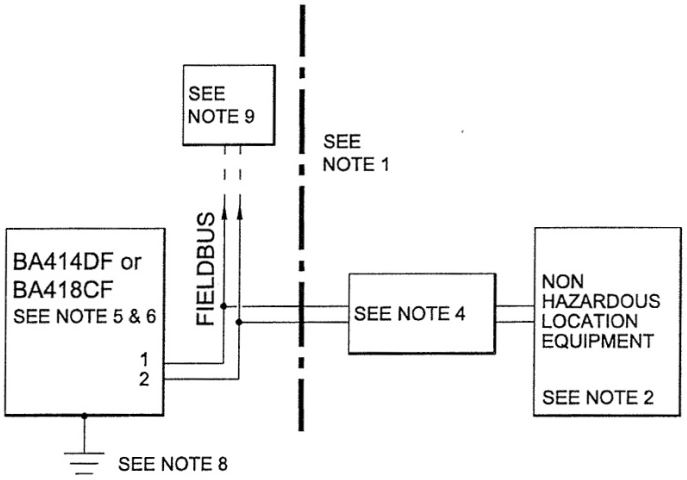

****
Note:
No modification to be made without reference/approval from FM Approvals and BEKA Associates Design Department.
****

Notes:

1. The associated intrinsically safe barriers and fieldbus power supply must be FM approved and the manufacturers' installation drawings shall be followed when installing this equipment.
   For installations in Canada the associated intrinsically safe barriers and fieldbus power supply must be CFM or CSA approved and the manufacturers' installation drawings shall be followed when installing the equipment.

2. The unclassified location equipment connected to the associated intrinsically safe barriers and fieldbus power supply shall not use or generate more than 250V rms or 250V dc.

3. Installation shall be in accordance with ANSI/ISA RP 12.06.01 "Installation of Intrinsically Safe Systems for Hazardous (Classified) Locations" and the National Electrical Code ANSI/NFPA 70.
   Installations in Canada shall be in accordance with the Canadian Electrical Code C22.2

4. Fieldbus power supply with FISCO compliant output (IEC6009-27) or galvanic isolator with entity parameters complying with the following requirements:

Uo or Vt	equal to or less than	Ui
Io or It	equal to or less than	Ii
Po	equal to or less than	Pi
La	equal to or greater than	Lcable + Li
Ca	equal to or greater than	Ccable + Ci

cont:

Title: FM Approvals Control Drawing for Intrinsically Safe BA414DF & BA418CF Fieldbus Indicators

Drawn	Checked	Scale
RC		NTS

Drawing No. CI410–12
Sheet 1 of 3

File: CI410–12s1.dwg 15.09.09

Includes BA444DF see note 11

5. To maintain IP66 protection between the BA418CF and the mounting panel:

   Four panel mounting clips should be used

   Minimum panel thickness should be — 2mm (0.08inches) Steel; 3mm (0.12inches) Aluminium

   Outside panel finish should be smooth, free from particle inclusions, runs or build-up around cut-out.

   Panel cut-out should be — 66.2 x 136.0mm -0.0 +0.5 (2.60 x 5.35 inches –0.00 +0.02)

   Edges of panel cut-out should be deburred and clean

   Each panel mounting clip should be tightened to between: — 20 and 22cNm (1.77 to 1.95 inLb)

6. When installed in a hazardous (classified) location the BA414DF Fieldbus Indicators shall be fitted with cable glands / conduit hubs selected from the following table

   Metallic glands and hubs must be grounded – see note 7.

Class	Permitted gland or conduit hub
Class I	Any metallic or plastic cable gland or conduit hub that provides the required environmental protection.
Class II and III	**Crouse – Hinds Myler hubs** SSTG-1 STG-1 STAG-1 MHUB-1 **O-Z / Gedrey Hubs** CHMG-50DT **REMKE hub** WH-1-G **Killark Glands** CMCXAA050 MCR050 MCX050

7. In addition to the supplied bonding plate, when 3 metallic glands or conduit hubs are fitted to a BA414DF Fieldbus Indictors, all metalic glands or conduit hubs must be connected together and grounded.

8. **CAUTION:** The BA414DF and BA418CF Fieldbus Indicator enclosures are manufactured from conductive plastic per Article 250 of the National Electrical Code the enclosures shall be grounded using the 'E' terminal on the terminal block.

9. The terminator on the Fieldbus must be FM or for Canadian installations CFM or CSA Approved.

10. The BA414DF and BA418CF should be mounted where they are shielded from direct sunlight.

11. The BA414DF may alternatively be titled:
    BA444DF Fieldbus Indicator
    BA444DL Fieldbus Listener
    BA424DF Fieldbus Set Point Station

cont:

Iss.	Date	Modification	Ckd.	Appd.
1	28.03 2006	First release	.	.
2	15.09 2009	Provision for alternative instrument titles added.		

BEKA associates Hitchin England

company confidential, copyright reserved.

Title: FM Approvals Control Drawing for Intrinsically Safe BA414DF & BA418CF Fieldbus Indicators

Drawn: RC | Checked | Scale: NTS

Drawing No. CI410–12

Sheet 2

File: CI410–12s2.dwg 15.09.09

Includes BA444DF see note 11

12. The BA418CF may alternatively be titled:
BA448CF Fieldbus Indicator
BA448CL Fieldbus Listener
BA428CF Fieldbus Set Point Station

FISCO Rules

The FISCO Concept allows the interconnection of intrinsically safe apparatus to associated apparatus not specifically examined in such combination. The criterion for such interconnection is that the voltage (Vmax), the current (Imax) and the power (Pmax) which intrinsically safe apparatus can receive and remain intrinsically safe, considering faults, must be equal or greater than the voltage (Uo, Voc or Vt), the current (Io, Isc or It) and the power (Po) which can be provided by the associated apparatus (supply unit). In addition the maximum unprotected residual capacitance (Ci) and inductance (Li) of each apparatus (other than terminators) connected to the Fieldbus must be less than or equal to 5nF and 10uH respectively.
In each I.S. Fieldbus segment only one active source, normally the associated apparatus, is allowed to provide the necessary power for the Fieldbus system. The allowed voltage (Uo, Voc or Vt) of the associated apparatus used to supply the bus cable must be limited to the range 14Vdc to 24Vdc. All other equipment connected to the bus cable has to be passive, meaning that the apparatus is not allowed to provide energy to the system, except a leakage current of 50µA for each connected device. Separately powered equipment needs galvanic isolation to ensure the intrinsically safety Fieldbus circuit remains passive.
The cable used to interconnect the devices needs to comply with the following parameters:
Loop resistance R': 15....150Ω/km
Inductance per unit length L':0.4....1mH/km

Capacitance per unit length C': 80....200nF/km
C' = C' line/line+0.5 C' line/screen, if both lines are floating
or
C' = C' line/line + C'line/screen, if the screen is connected to one line.
Length of spur cable: max. 30m
Length of trunk cable: max. 1km
Length of splice: max = 1m
Terminators
At the end of each trunk cable an FM Approved line terminator with the following parameters is suitable:
R= 90....100Ω
C = 0 ....2.2µF

System evaluation
The number of passive devices like transmitters, actuators, connected to a single bus segment is not limited due to I.S. reasons. Furthermore, if the above rules are respected, the inductance and the capacitance of the cable need not be considered and will not impair the intrinsic safety of the installation.

Notes.
1. The intrinsic safety FISCO concept allows the interconnection of FM Approved Intrinsically Safe devices with FISCO parameters not specifically examined in combination as a system when:
Uo or Voc or Vt ≤ Vmax, Io, Isc or It ≤ Imax, Po ≤ Pi.
For Canadian installations the intrinsic safety FISCO concept allows the interconnection of CFM or CSA Approved Intrinsically Safe devices with FISCO parameters not specifically examined in combination as a system when:
Uo or Voc or Vt ≤ Vmax, Io, Isc or It ≤ Imax, Po ≤ Pi.

Iss.	Date	Modification	Ckd.	Appd.
1	28.03 2006	First release	.	.
2	15.09 2009	Provision for alternative instrument titles added.		

company confidential, copyright reserved.

BEKA associates Hitchin England

Title
FM Approvals Control Drawing for Intrinsically Safe
BA414DF & BA418CF Fieldbus Indicators

Drawn	Checked	Scale
RC		NTS

Drawing No. CI410–12
Sheet 3

File: CI410–12s3.dwg 15.09.09

Includes BA444DF see note 11

HAZARDOUS (CLASSIFIED) LOCATION

UNCLASSIFIED LOCATION

BA414DF LOCATIONS:
Class I, Division 2, Groups A, B,C, D
Class II, Division 2, Groups E, F & G
Class III
Class I, Zone 2, Groups IIC

BA418CF LOCATIONS:
Class I, Division 2, Groups A, B,C, D
Class I, Zone 2, Groups IIC

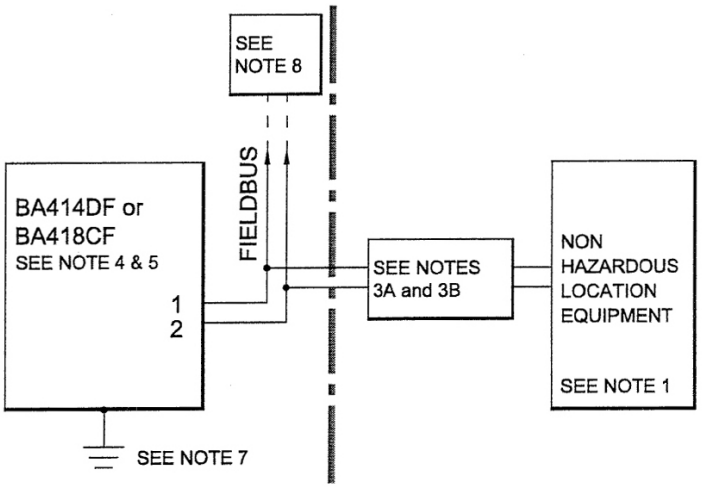

BA414DF and BA418CF Maximum input and output parameters

Terminals 1 & 2
These terminals comply with The Fieldbus Nonincendive Cincept (FNICO) defined by IEC60079-27
(Typical current consumption 13mA)

Vmax = 32V dc
NIFW Vmax = 17.5V (FNICO)
Ci = 0
Li = 8µH

Note:
No modification to be made without reference/approval from FM Approvals and BEKA Associates Design Department.

Notes:

1. The unclassified location equipment connected to the associated nonincendive field wiring apparatus must not use or generate more than 250V rms or 250V dc.

2. Nonincendive field wiring installations shall be in accordance with the National Electrical Code ANSI/NFPA 70. The Nonincendive Field Wiring concept allows interconnection of Nonincendive Field Wiring Apparatus with Associated Nonincendive Field Wiring Apparatus using any of the wiring methods permitted for unclassified locations.
   Canadian installations shall be in accordance with the Canadian Electrical Code C22.2

3A. Linear power supply
   A linear fieldbus power supply shall be:
   FM Approved Associated Nonincendive Field Wiring Apparatus installed in the unclassified location with parameters complying with the following requirements:
   For Canadian Installations apparatus shall be CFM or CSA approved.

   OR

   FM Approved Nonincendive Field Wiring Apparatus installed in the classified location with parameters complying with the following requirements:
   For Canadian Installations apparatus shall be CFM or CSA approved.

Voc	equal to or less than	Vmax
La	equal to or greater than	Lcable + Li
Ca	equal to or greater than	Ccable

Cont.

Iss.	Date	Modification	Ckd.	Appd.
1	28.03.2006	First release	.	.
2	15.09.2009	Provision for alternative instrument titles added.		

BEKA associates Hitchin England
company confidential, copyright reserved.

Title
FM Approvals Control Drawing for Nonincendive BA414DF & BA418CF Fieldbus Indicators

Drawn	Checked	Scale
RC		NTS

Drawing No. CI410–13
Sheet 1 of 4

File: CI410–13s1.dwg 15.09.09

Includes BA444DF see note 10

3B. FNICO non-linear power supply

A FNICO non-linear fieldbus power supply shall be:

FM Approved Associated Nonincendive Field Wiring Apparatus installed in the unclassified location complying with the following table:

For Canadian Installations apparatus shall be CFM or CSA approved.

OR

FM Approved Nonincendive Field Wiring Apparatus installed in the classified location complying with the following table:

For Canadian Installations apparatus shall be CFM or CSA approved.

Voc	Maximum current for Groups AB [IIC]	Maximum current for Groups CD [IIB, IIA]
V	mA	mA
14	274	570
15	199	531
16	154	432
17.5	121	360

4. To maintain IP66 protection between the BA418CF and the mounting panel:

Four panel mounting clips should be used

Minimum panel thickness should be 2mm (0.08inches) Steel
3mm (0.12inches) Aluminium

Outside panel finish should be smooth, free from particle inclusions, runs or build-up around cut-out.

Panel cut-out should be 66.2 x 136.0mm -0.0 +0.5
(2.60 x 5.35 inches –0.00 +0.02)

Edges of panel cut-out should be deburred and clean

Each panel mounting clip should be tightened to between: 20 and 22cNm (1.77 to 1.95 inLb)

Cont.

Iss.	Date	Modification	Ckd.	Appd.
1	28.03 2006	First release	.	.
2	15.09 2009	Provision for alternative instrument titles added.		

BEKA associates Hitchin England

company confidential, copyright reserved.

Title: FM Approvals Control Drawing for Nonincendive BA414DF & BA418CF Fieldbus Indicators

Drawn	Checked	Scale
RC		NTS

Drawing No. CI410–13
Sheet 2

File: CI410–13s2.dwg 15.09.09

Includes BA444DF see note 10

5. When installed in a hazardous (classified) location the BA414DF Fieldbus Indicator shall be fitted with cable glands / conduit hubs selected from the following table.

   Metallic glands and hubs must be grounded – see note 6.

Class	Permitted gland or conduit hub
Class I	Any metallic or plastic cable gland or conduit hub that provides the required environmental protection.
Class II and III	**Crouse – Hinds Myler hubs** SSTG-1 STG-1 STAG-1 MHUB-1 **O-Z / Gedrey hub** CHMG-50DT **REMKE hub** WH-1-G **Killark Glands** CMCXAA050 MCR050 MCX050

6. In addition to the supplied bonding plate, when 3 metallic glands or conduit hubs are fitted to BA414DF Fieldbus Indicators, all metallic glands or conduit hubs must be connected together and grounded.
7. **CAUTION:** The BA414DF and BA418CF Fieldbus Indicator enclosures are manufactured from conductive plastic per Article 250 of the National Electrical Code the enclosures shall be grounded using the 'E' terminal on the terminal block.
8. The terminator on the Fieldbus must be FM Approved or for Canadian Installations CFM or CSA Approved
9. The BA414DF and the BA418CF should be mounted where they are shielded from direct sunlight.
10. The BA414DF may alternatively be titled:
    BA444DF Fieldbus Indicator
    BA444DL Fieldbus Listener
    BA424DF Fieldbus Set Point Station
11. The BA418CF may alternatively be titled:
    BA448CF Fieldbus Indicator
    BA448CL Fieldbus Listener
    BA428CF Fieldbus Set Point Station

Cont.

Iss.	Date	Modification	Ckd.	Appd.
1	28.03 2006	First release	.	.
2	15.09 2009	Provision for alternative instrument titles added.		

BEKA associates Hitchin England

company confidential, copyright reserved.

Title: FM Approvals Control Drawing for Nonincendive BA414DF & BA418CF Fieldbus Indicators

Drawn	Checked	Scale
RC		NTS

Drawing No. CI410–13
Sheet 3

File: CI410–13s3.dwg 15.09.09

Includes BA444DF see note 10

FNICO Rules

The FNICO Concept allows the interconnection of intrinsically safe apparatus to associated apparatus not specifically examined in such combination. The criterion for such interconnection is that the voltage (Vmax), the current (Imax) and the power (Pmax) which intrinsically safe apparatus can receive and remain intrinsically safe, considering faults, must be equal or greater than the voltage (Uo, Voc or Vt), the current (Io, Isc or It) and the power (Po) which can be provided by the associated apparatus (supply unit). In addition the maximum unprotected residual capacitance (Ci) and inductance (Li) of each apparatus (other than terminators) connected to the Fieldbus must be less than or equal to 5nF and 20uH respectively.
In each I.S. Fieldbus segment only one active source, normally the associated apparatus, is allowed to provide the necessary power for the Fieldbus system. The allowed voltage (Uo, Voc or Vt) of the associated apparatus used to supply the bus cable must be limited to the range 14Vdc to 17.5Vdc. All other equipment connected to the bus cable has to be passive, meaning that the apparatus is not allowed to provide energy to the system, except a leakage current of 50µA for each connected device. Separately powered equipment needs galvanic isolation to ensure the intrinsically safety Fieldbus circuit remains passive.
The cable used to interconnect the devices needs to comply with the following parameters:
Loop resistance R': 15....150Ω/km
Inductance per unit length L':0.4....1mH/km

Capacitance per unit length C': 80....200nF/km
C' = C' line/line+0.5 C' line/screen, if both lines are floating
or
C' = C' line/line + C'line/screen, if the screen is connected to one line.
Length of spur cable: max. 30m
Length of trunk cable: max. 1km
Length of splice: max = 1m
Terminators
At the end of each trunk cable an FM Approved line terminator with the following parameters is suitable:
R= 90...100Ω
C = 0....2.2µF

System evaluation
The number of passive devices like transmitters, actuators, connected to a single bus segment is not limited due to nonincendive reasons. Furthermore, if the above rules are respected, the inductance and the capacitance of the cable need not be considered and will not impair the intrinsic safety of the installation.

Notes.
1. The FNICO concept allows the interconnection of FM Approved nonincendive devices with FNICO parameters not specifically examined in combination as a system when:
Uo or Voc or Vt ≤ Vmax.

For Canadian installations the FNICO concept allows the interconnection of CFM or CSA Approved nonincendive devices with FNICO parameters not specifically examined in combination as a system when:
Uo or Voc or Vt ≤ Vmax.

Iss.	Date	Modification	Ckd.	Appd.
1	28.03 2006	First release		
2	15.09 2009	Provision for alternative instrument titles added.		

BEKA associates Hitchin England

company confidential, copyright reserved.

Title: FM Approvals Control Drawing for Nonincendive BA414DF & BA418CF Fieldbus Indicators

Drawn	Checked	Scale
RC		NTS

Drawing No. CI410–13
Sheet 4

File: CI410–13s4.dwg 15.09.09

Includes BA444DF see note 10

APPENDIX 3
IECEx Certification

A3.0 The IECEx Certification Scheme

IECEx is a global certification scheme for explosion protected products which aims to harmonise international certification standards. For additional information about the IECEx certification scheme and to view the BEKA associate certificates, please visit www.iecex.com

A3.1 IECEx Certificate of Conformity

The BA444DF-P Fieldbus Indicator and has been issued with an IECEx Certificate of Conformity number IECEx ITS 06.0012X which specifies the following certification codes:

For gas
Ex ia IIC T4 Ga
Ex ic IIC T4 Gc
FISCO Field Device Ex ia IIC T4
Ta = -40°C to 70°C

For dust
Ex ia IIIC T100°C Db IP66
Ex ic IIIC T100°C Dc IP66
Ta = -20°C to 60°C

The specified IECEx gas and dust intrinsic safety parameters are identical to the ATEX & UKEX safety parameters described in the main section and Appendix 1 of this manual.

The IECEx certificate may be downloaded from www.beka.co.uk, www.iecex.com or requested from the BEKA sales office.

A3.2 Installation

The IECEx, ATEX and UKEX certificates specify identical safety parameters and installation requirements for both gas and dust approvals. The ATEX & UKEX installation requirements specified in the main section and in Appendix 1 of this manual may therefore be used for IECEx installations, but the local code of practice should also be consulted.

CAUTION installation in Zone 0

When installed in a Zone 0 potentially explosive atmosphere requiring EPL Ga apparatus, the instrument shall be installed such that even in the event of rare incidents, an ignition source due to impact or friction between the aluminium label and iron/steel is excluded.

No special conditions apply when the indicator is installed in Zone 1 or in Zone 2.

A3.3 IECEx Dust certification

If IECEx dust certification is required it must be requested when the BA444DF-P Fieldbus Indicator is purchased.

CAUTION

Before installing a BA444DF-P Fieldbus Indicator in the presence of a combustible dust, ensure that the certification information label, which is located on the top of the instrument, specifies dust certification - see below.

A3.4 Versions of the BA444DF-P

Three versions of the BA444DF-P are available.

IECEx, ATEX and UKEX version for use in gas atmospheres.

IECEx, ATEX and UKEX version for use in gas and dust atmospheres.

Factory Mutual Approved version

APPENDIX 4

EU Declaration of Conformity

This certificate is issued for electrical apparatus BA414DF-F, BA444DF-F and BA444DF-P

Description
BA414DF and BA444DF are field mounting, intrinsically safe, single and eight variable fieldbus indicators. Suffix F denotes FOUNDATION™ fieldbus & suffix P PROFIBUS PA protocol.

Manufactured by
BEKA associates Ltd, Old Charlton Road, Hitchin, Herts. UK. SG5 2DA

Council Directives this equipment complies with:

2014/34/EU (ATEX Directive)

Relating to equipment and protective systems intended for use in potentially explosive atmospheres.

Provisions of the Directive fulfilled by the equipment:

Group II Category 1G Ex ia IIC T4 Ga Ta -40°C to +70°C
FISCO Field Device Ex ia IIC T4 Ta -40°C to +70°C
Group II Category 2D Ex ia IIIC T100°C Db IP66 Ta -20°C to +60°C

Group II Category 3G Ex ic IIC T4 Gc Ta -40°C to +70°C
Group II Category 3D Ex ic IIIC T100°C Dc IP66 Ta -20°C to +60°C

Notified Body for EU-Type Examination and production
INTERTEK ITALIA SPA 2575 Via Guido Miglioli, 2/A 20063 Cernusco sul Naviglio (MI) Italy

EU-Type Examination Certificate
ITS06ATEX25313X issue 2 dated 29/10/2015

Standards used:
EN 60079-0:2012/A11:2013; EN 60079-11:2012
Compliant with EN IEC 60079-0:2018

2014/30/EU (EMC Directive)

Standards used:
EN 61326-1:2021

2011/65/EU (RoHS Directive) relating to hazardous substances in electronic and electrical equipment.

2015/863/EU additional substances added by amending Annex II to Directive 2011/65/EU as regards the list of restricted substances.

CE **mark first affixed in 2006**

Authorised Signatory:

Olivier Lebreton CEng MIET
Managing Director

Issue 13	17th August 2021
Issue 14	19th Jan 2023
Issue 15	24th May 2023

BEKA associates Ltd. Old Charlton Road, Hitchin, SG5 2DA UK
Telephone +44 (0) 1462 438301 Fax +44 (0) 1462 453971
e-mail sales@beka.co.uk www.beka.co.uk