BA484D
Intrinsically safe
Field mounting
Modbus RTU display
Serial Data display

Issue 21

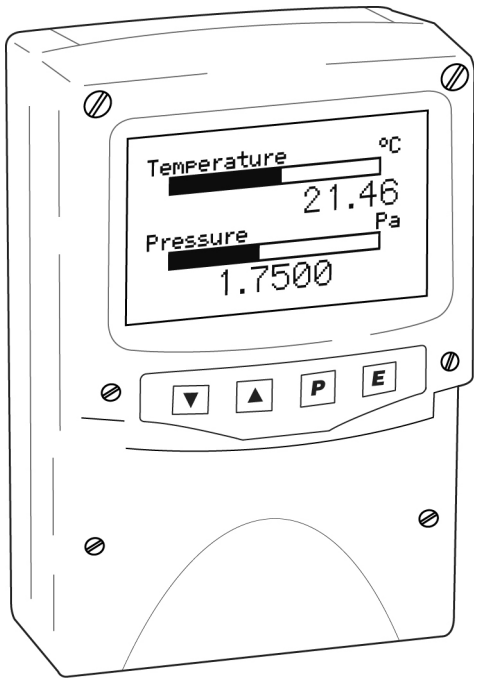

Issue: 21
23rd October 2025

CONTENTS

1. Description
- 1.1 Documentation
- 1.2 Version 3 Firmware
- 1.3 Version 3.4 firmware

2. Operation

3. Applications
- 3.1 Legacy protocol
- 3.2 Modbus protocol
- 3.3 BEKA protocol

4. Intrinsic Safety Certification
- 4.1 ATEX & UKEX certification
- 4.2 Zones, gas groups and T rating
- 4.3 Power supply
- 4.4 External switches
- 4.5 Switch outputs
- 4.6 Certification label information

5. System Design for Hazardous Area
- 5.1 Use with BA201 Communications Isolator.
  - 5.1.1 Cable length
  - 5.1.2 Two wire system
  - 5.1.3 Three wire system
- 5.2 Use with MTL5051 Serial Data Comms Isolator.
  - 5.2.4 Three wire system
  - 5.2.1 Cable length
  - 5.2.2 Conditioning the MTL5051
  - 5.2.3 Two wire system
  - 5.2.5 Four wire System
- 5.3 Switch outputs

6. Installation
- 6.1 Location
- 6.2 Installation procedure
- 6.3 EMC

7. Configuration
- 7.1 Default configuration
- 7.2 Accessing the configuration menus
- 7.3 Summary of configurable functions
- 7.4 Quick access menu

8. Maintenance
- 8.1 Fault finding during commissioning
- 8.2 Fault finding after commissioning
- 8.3 Servicing
- 8.4 Routine maintenance
- 8.5 Guarantee
- 8.6 Customer comments

9. Accessories
- 9.1 Tag number
- 9.2 Pipe mounting kits
- 9.3 Serial Text Display - Programming Guide.
- 9.4 Serial Text Display – Modbus Guide.

10. Index

Appendix 1
Getting Started Quickly

Appendix 2
ATEX & UKEX dust certification

Appendix 3
FM Approval for use in the USA and cFM Approval for use in Canada.

Appendix 4
IECEx certification

Appendix 5
EU Declaration of Conformity

The BA484D is CE marked to show compliance with the European Explosive Atmospheres Directive 2014/34/EU and the European EMC Directive 2014/30/EU.
It is also UKCA marked to show compliance with UK statutory requirements Equipment and Protective Systems Intended for Use in Potentially Explosive Atmospheres Regulations UKSI 2016:1107 (as amended) and with the Electromagnetic Compatibility Regulations UKSI 2016:1091 (as amended).

1. DESCRIPTION

The BA484D is an intrinsically safe instrument that can display text and simple graphics in a hazardous area. Incorporating four operator switches, two solid state outputs and a backlit 120 x 64 pixel graphical display, it is a versatile operator interface for simple machine or process control applications.

Housed in a robust IP66 glass reinforced polyester (GRP) enclosure with an armoured glass window, the BA484D is surface mounting, or may be pipe mounted using one of the accessory kits.

The BA484D text display has ATEX & UKEX certification for use in gas and dust atmospheres. It carries the EU community CE mark and the UKCA mark. Subject to local codes of practice it may be installed in any of the European Economic Area (EEA) member countries and in the UK.

For use in the USA and Canada the BA484D has optional intrinsic safety and nonincendive FM and cFM Approval – see Appendix 3.

For international applications, all versions of the BA484D Serial Text Display have IECEx intrinsic safety approval allowing installation in explosive gas and dust atmospheres.

IECEx, ATEX and UKEX dust certification is an option – See Appendix 2 and Appendix 4.

1.1 Documentation

This instruction manual describes system design, conditioning and installation of the BA484D serial text display. To quickly install and commission a BA484D for a basic application, please read Appendix 1 Getting Started Quickly.

For detailed programming information separate guides describe the Modbus RTU and BEKA protocols. These are available from our sales department or may be downloaded from www.beka.co.uk.

Serial Text Display–Modbus Interface Guide
Description of parameters
Use with standard screens

Serial Text Display–Programming Guide
BEKA protocol
Command summary & reference
Scripting
Pattern matching
Advanced features

1.2 Version 3 Firmware

This manual describes the enhanced features available in text displays employing version 3.0 firmware which was released in August 2005.
Namely:

Modbus protocol
Cyclic data and mapped variables
Nine standard screens
Scripting
Pattern matching
Speed increase
Font 5 soft font storage

The instrument's firmware version can be established using the 'Unit Info' function in the main configuration menu - see section 7.3 of this manual. Text displays employing Version 3.0 firmware are backwards compatible with all earlier versions.

1.3 Version 3.4 Firmware

This manual describes the additional features available in text displays employing version 3.4 firmware which was released in October 2009.
Namely:

Two eight variable standard screens added.

Integer variables added to the Modbus register map to complement the original float values.

New function allows the number of process variables to be entered, so that when scrolling the display unused screens are not shown.

Enhancements to to the Scripting facility.

The instrument's firmware version can be established using the 'Unit Info' function in the main configuration menu - see section 7.3 of this manual. Text displays employing Version 3.4 firmware are backwards compatible with all earlier versions.

2. OPERATION

Fig 1 shows a simplified block diagram of a BA484D serial text display. The instrument connects to a serial communications galvanic isolator in the safe area via two, three or four wires that carry both power and bi-directional communication. The switch outputs may be controlled and the operator switches interrogated from the safe area via the serial communication link.

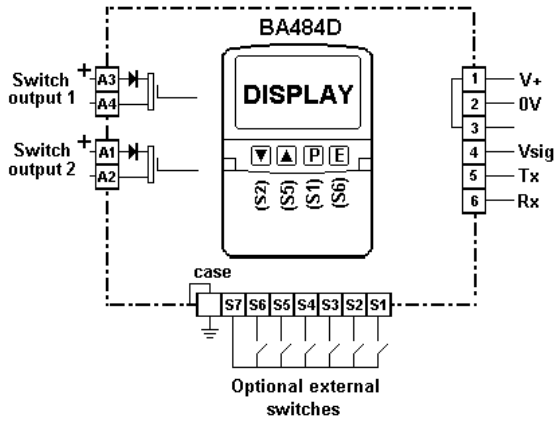

Fig 1 Simplified block diagram of BA484D

Two alternative certified galvanic isolators may be used to power and communicate with the display. The BA201 communications isolator has an RS232 or two wire RS485 safe area port and can power up to four BA484D displays with serial numbers above 42518/… i.e. manufactured after Sept 2007. The MTL5051 serial data comms isolator has an RS232 or RS422 safe area port and can power up two displays, or up to four with the addition of an MTL5025 solenoid driver. See section 5 for system details.

3. APPLICATIONS

The BA484D has been designed for easy integration with most serial data sources and therefore contains a wealth of features. Although at first sight the complexity may seem daunting, the support documentation is application related so that only relevant sections need to be read. If additional help is needed, BEKA engineers are always willing to assist with system design, programming and screen development.

The BA484D may be used with three alternative protocols; legacy, BEKA or Modbus RTU. The pattern matching function also enables proprietary ASCII serial data, such as that from a weighing system, to be decoded and displayed. This advanced feature is described in the *Serial Text Display - Programming Guide*.

3.1 Legacy protocol

The legacy protocol contained in the BA484D allows the instrument to replace an MTL643 IS text display. All the functions of an MTL643 are replicated, but with the advantage of a backlit display, ATEX & UKEX certification.

Legacy protocol only allows three external switches S1, S2 & S3, not the front panel push-buttons, to be used for operator inputs. Similarly, the MTL643 only has one output control, so the two switch outputs in the BA484D operate in parallel.

When using the legacy protocol, the configuration menus are only operational between power being applied to the BA484D and the first message being received.

3.2 Modbus RTU protocol

The BA484D supports Modbus RTU protocol in slave mode. Up to eight process variables, together with their units of measurement and tag descriptions may be displayed on one of the eleven standard screen formats shown below. These illustrate typical units of measurement and tag information, but any may be entered. This allows one, two, four or eight process variables to be shown on a common screen without the need for any programming, apart from setting the BA484D address and writing each Modbus variable in the required Modbus register address map.

If more process variables than can be shown on the selected standard screen are to be displayed, the operator can select which process variables are shown by operating the *Up* or *Down* push-buttons. This selection can also be made by the system host.

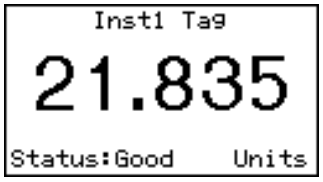

One variable

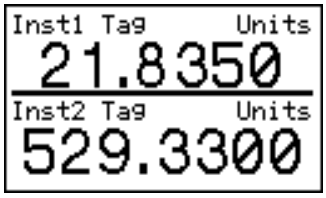

Two variables

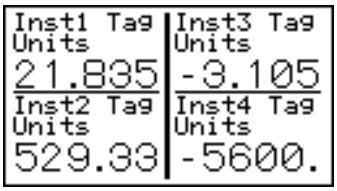

Four variables

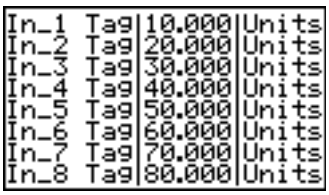

Eight variables



One variable + horizontal bargraph

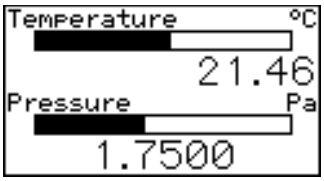

Two variables + horizontal bargraphs

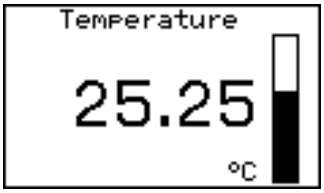

One variable + vertical bargraph

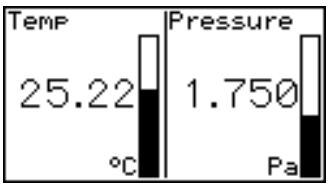

Two variables + vertical bargraphs

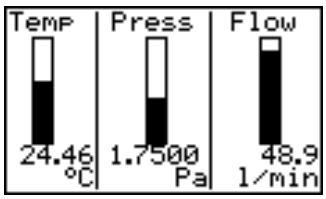

Three variables + vertical bargraphs

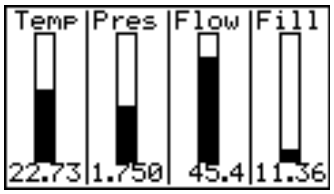

Four variables + vertical bargraphs



Eight variables + horizontal bargraphs

The Modbus protocol also enables each of the four front panel push-buttons to be interrogated so they may be used for operator controls. If larger industrial size push-buttons are required, up to six may be connected to the BA484D terminals. When external switches are used the instrument front panel switches are disabled.

The two single pole solid state outputs may be controlled via Modbus allowing certified hazardous area loads such as sounders, beacons and valves to be turned on and off.

For more demanding applications, BEKA protocol may be used to construct custom display screens for use in a Modbus system.

Modbus protocol is described in the *Serial Text Display – Modbus Guide*, which is available from the BEKA sales office and from the BEKA web site.

3.3 BEKA protocol

BEKA protocol enables text to be written anywhere on the screen in five different font sizes, together with lines, boxes and bargraphs. Alternatively one of the nine standard display screens described in section 3.2 may be used.

Simple bit map graphics may also be downloaded to the display and all characters can be reversed or flashed. Information may also be written to a hidden screen that may be displayed when required.

This protocol enables each of the four front panel push-buttons to be interrogated so they may be used for operator controls. By displaying the switch function on the screen above the button, ‘soft switches’ can be created. If larger industrial size push-buttons are required, these may be connected to the BA484D terminals. When external switches are used the front panel switches are disabled.

Two single pole solid state outputs may be used to switch certified hazardous area loads such as sounders, beacons and valves.

BEKA protocol is described in the *Serial Text Display – Programming Guide* which is available from the BEKA sales office and from the BEKA web site.

4. INTRINSIC SAFETY CERTIFICATION

4.1 ATEX & UKEX certification

The BA484D has ATEX & UKEX certification for use in gas and dust atmospheres.
It carries the EU community CE mark and the UKCA mark. Subject to local codes of practice it may be installed in any of the European Economic Area (EEA) member countries and in the UK.

This manual describes ATEX & UKEX installations in explosive gas atmospheres which conform with EN 60079:14 *Electrical installation design, selection and erection.* When designing systems for installation the local Code of Practice should be consulted.

ATEX & UK dust certification is an option described in Appendix 2.

4.2 Zones, gas groups and T rating

The BA484D has Group II Category 1G Ex ia IIC T5 Ga (Tamb –40 to 60°C) apparatus certification. When connected to a suitable system the BA484D Serial Text Display may be installed in:

Zone 0	explosive gas air mixture continuously present.
Zone 1	explosive gas air mixture likely to occur in normal operation.
Zone 2	explosive gas air mixture not likely to occur, and if it does will only exist for a short time.

Be used with gases in groups:

Group	A	propane
Group	B	ethylene
Group	C	hydrogen

Having a temperature classification of:

T1	450°C
T2	300°C
T3	200°C
T4	135°C
T5	100°C

At an ambient temperature between –40 and +60°C.

Note: the guaranteed operating temperature range of the text display is –20 to +60°C

This allows the BA484D to be installed in all Zones and to be used with most common industrial gases.

4.3 Power supply

When installed in a hazardous area the BA484D display must be powered from, and communicate via a certified communications isolator installed in the safe area. Either a BA201 Communications Isolator or a MTL5051 Serial Data Comms Isolator may be used.

Although other certified barriers or galvanic isolators have output parameters equal to or less than the BA484D input parameters, because of the data conversion performed by the BA201 and MTL5051, currently these are the only suitable devices.

The maximum permitted cable parameters are shown in section 5.

4.4 External switches

For applications requiring operator inputs to be made by large industrial push-buttons, terminals S1 to S7 allow external switches to be connected to the text display. When the external push-buttons are enabled in the configuration menu, the front panel push-buttons are automatically disabled.

Terminals S1 to S7 have the following combined output safety parameters:

Uo	=	14.7V dc
Io	=	99mA dc
Po	=	0.6W

The switches and associated wiring connected to the terminals must comply with the requirements for *simple apparatus*. i.e. they must have IP20 protection and be capable of withstanding a 500V rms insulation test to earth for one minute. Most industrial push buttons satisfy these requirements.

The total maximum permitted cable parameters for all the cables connected to terminals S1 to S7 in a IIC hydrogen gas must be less than:

Co = 0.22µF
Lo = 0.26mH

These are not restrictive allowing a significant distance between the switches and the instrument.

4.5 Switch outputs

Each of the two switch outputs is a separate galvanically isolated solid state switch. The certificates specify that under fault conditions the voltage, current and power at each switch output will not exceed those specified for *simple apparatus* in IEC / EN 60079-11. This allows each of the BA484D switch outputs to be connected to any intrinsically safe circuit protected by a certified Zener barrier or galvanic isolator providing that the output parameters of each circuit are less than:

Uo = 28V dc
Io = 200mA
Po = 0.85W

The maximum equivalent capacitance and inductance of each BA484D switch output is:

Ci = 40nF
Li = 20µH

To determine the maximum permissible cable parameters, Ci and Li must be subtracted from the maximum cable capacitance and inductance specified for the circuit connected to the switch.

4.6 Certification Label Information

The certification label is fitted in a recess on the top outer surface of the enclosure. It shows the IECEx, ATEX & UKCA certification information plus the BEKA associates name and location. Non European certification information may also be included. The instrument serial number and year of manufacture are recorded on a separate label inside the terminal compartment.

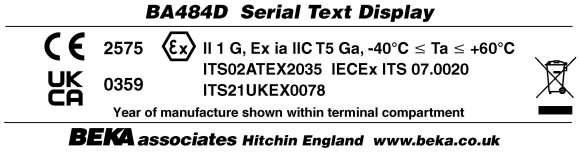

5. SYSTEM DESIGN FOR HAZARDOUS AREAS

The BA484D serial text display may be powered and communicate via a BA201 Communications Isolator or a MTL5051 serial data comms isolator. Both are certified Associated Apparatus, and their features are compared in table 1.

	BA201	**MTL5051**
Mounting	35mm DIN rail	
Supply	20-35Vdc	
Safe area ports	RS232 or RS485 2 wire	RS232 or RS422
Port selection	Automatic	DIL switches
Number of serial text displays	Up to 4	Up to 2. Up to 4 with addition of MTL5025 galvanic isolator.
Communication speed	0.3 to 19.2 k baud	1.2 to 9.6 k baud
Multidrop safe area port	Yes	No

Table 1

5.1 Use with a BA201 Communications Isolator

There are two configurations that may be used for hazardous area installations. The choice depends upon how many text displays are required and the backlight brilliance. The following table summarises the performance of both systems.

	2 wire system		3 wire system			
Number of BA484D text displays	1	2	1	2	3	4
Backlight brilliance	Bright	Dim	Bright	Bright	Dim	Dim
Communication speed. For cable lengths up to 100m.	0.3 to 19.2kbaud					

Table 2

5.1.1 Cable length

The communications speed, type of cable and to a lesser extent the permissible intrinsic safety cable parameters, determine the maximum allowable cable length between the BA201 communications isolator and the serial text display(s). Cable lengths up to 600m have been successfully used at 9.6k baud with an RS232 safe area port.

Using the entity parameters specified by the BA484D and BA201 ATEX certificates, the maximum allowable cable parameters in a IIC gas are:

For a 2-wire system

Number of Serial Text Displays	Maximum permissible cable capacitance	Maximum permissible cable inductance
1	0.77µF	4.08mH
2	0.76µF	4.06mH

Table 3

For a 3-wire system

Number of Serial Text Displays	Maximum permissible cable capacitance	Maximum permissible cable inductance
1	0.162µF	0.98mH
2	0.152µF	0.96mH
3	0.142µF	0,94mH
4	0.132µF	0.92mH

Table 4

Only the maximum permitted capacitance for a 3-wire system is likely to limit the cable length. Assuming a generous maximum cable capacitance of 300pF/m, this allows up to 440m of cable with four serial text displays connected to a BA201 isolator. For reference, a typical Belden 8761 single twisted pair with overall shield has a capacitance of 100pF/m.

5.1.2 Two wire system

This is the simplest and probably the most frequently used system. One or two BA484D serial text displays are connected to a BA201 in the safe area via two wires that provide both power and bi-directional communication.

Fig 2 shows the wiring diagram. With this configuration data may be transmitted and received at 0.3, 1.2, 2.4, 4.8, 9.6 or 19.2k baud. When two BA484D text displays are connected to a single BA201 via two wires, the brilliance of both display backlights will be significantly reduced.

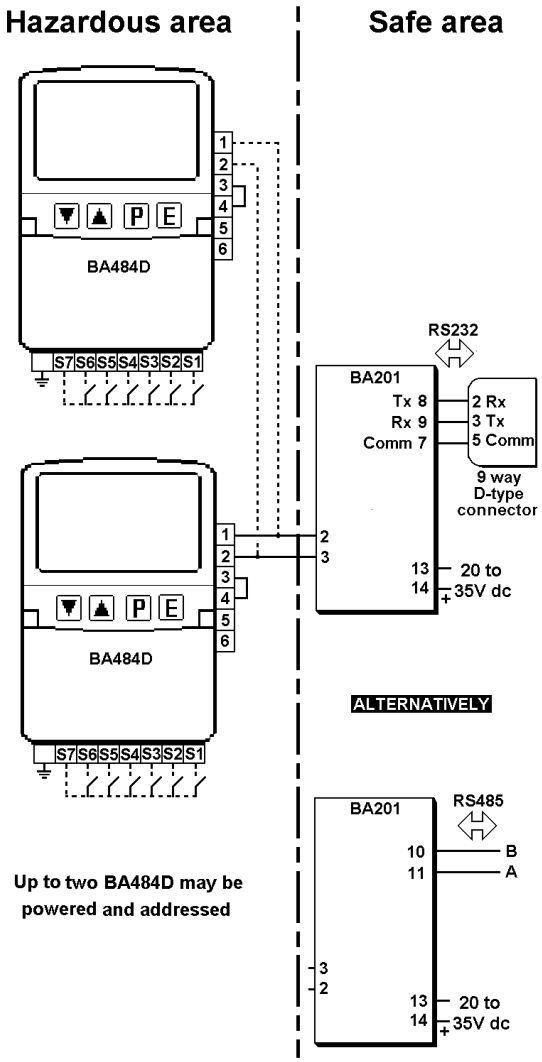

Fig 2 Two wire system for RS232 or RS485

5.1.3 Three wire system

The three wire system shown in Fig 3 can power and address up to four BA484D serial text displays. If more than two displays are connected, the backlight brilliance of all the displays will be significantly reduced.

With this configuration data may be transmitted and received at 0.3, 1.2, 2.4, 4.8, 9.6 or 19.2k baud.

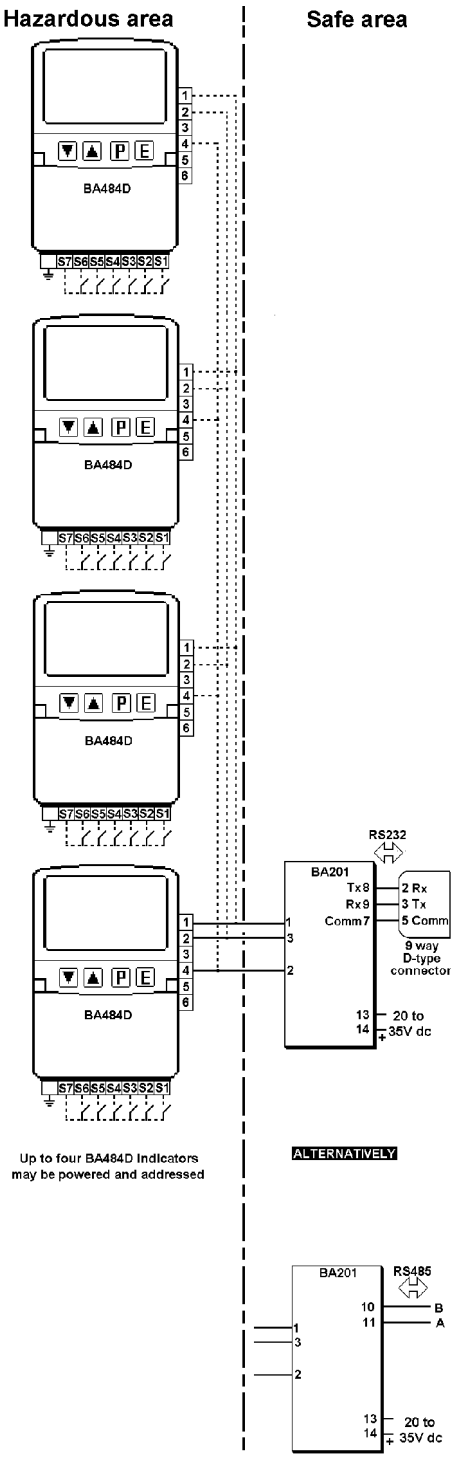

Fig 3 Three wire system for RS232 or RS485

5.2 Use with a MTL5051 Serial Data Comms Isolator

There are three configurations that may be used for hazardous area installations. The choice depends upon how many text displays are required, the backlight brilliance and the communication speed required. Table 5 summarises the performance.

	2 wire system		3 wire system				4 wire system
Number of BA484D text displays	1	2	1	2	3	4	1
Backlight brilliance	Bright	Dim	Bright	Bright	Dim	Dim	Bright
Communication speed kbaud	1.2 to 9.6		1.2 to 9.6				0.3 to 19.2

Table 5

5.2.1 Cable length

The dc loop resistance of the cable between the BA484D and the associated galvanic isolator in the safe area must not exceed 20Ω. This applies for 2, 3 and 4 wire systems irrespective of the number of text displays connected to the loop. Most instrument cables have a loop resistance of between 50 and 200mΩ per metre, thus limiting the maximum cable length to between 100 and 400 metres.

The maximum permitted intrinsic safety cable parameters must also not be exceed. However, in practice only the capacitive limit in IIC gases is likely to be restrictive.

Communication speed will also limit the transmission distance. At 9.6k baud a screened twisted pair should provide reliable communication up to 100 metres. If data corruption occurs the communication speed should be reduced.

5.2.2 Conditioning the MTL5051

The MTL5051 galvanic isolator, may be conditioned to have an RS232 or RS422 safe area port. DIL switches accessed from the top of the isolator perform the conditioning – see Figs 4, 5 and 6 for details.

5.2.3 Two wire system

This is the simplest and probably the most frequently used system. One or two BA484D serial text displays are connected to a MTL5051 in the safe area via two wires that provide both power and bi-directional communication.

Fig 4 shows the wiring diagram. With this configuration data may be transmitted and received at 1.2, 2.4, 4.8 or 9.6k baud. When two BA484D text displays are connected to a common galvanic isolator the brilliance of both display backlights will be significantly reduced.

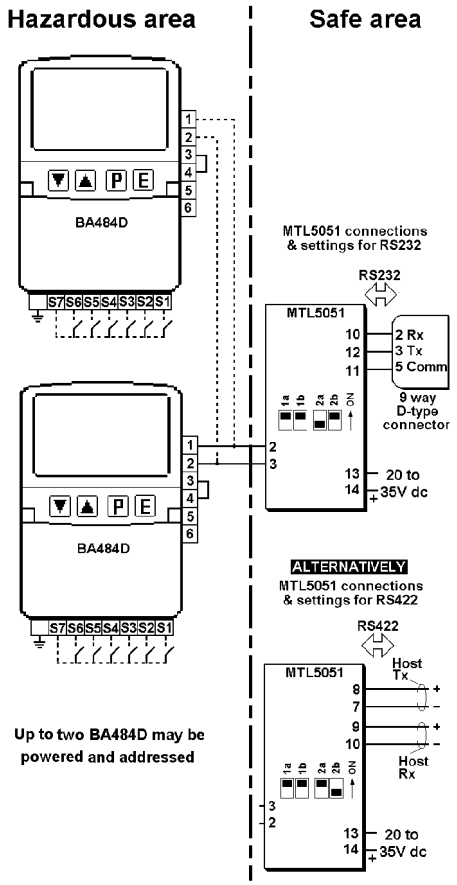

Fig 4 Two wire system for RS232 or RS422

5.2.4 Three wire system

The three wire system shown in Fig 5. It employs an additional galvanic isolator, the MTL5025 solenoid/alarm driver, enabling up to four BA488C serial text displays to be powered and addressed. When more than two Serial Text Display are connected, the backlight brilliance of all the displays will be significantly reduced.
With this configuration data may be transmitted and received at 1.2, 2.4, 4.8 or 9.6k baud.

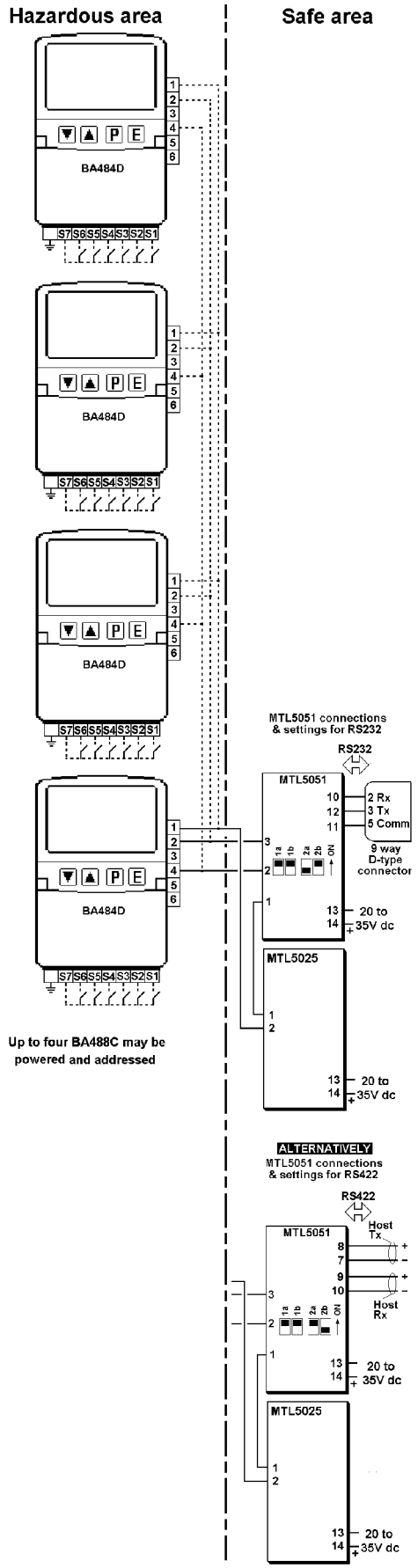

Fig 5 Three wire system for RS232 or RS422

5.2.5 Four wire system

The four wire system allows communication at higher and lower rates than the other two MTL5051 configurations. It should be used for applications requiring fast display updates, or with slow data rates when long cable runs are required.

Data may be transmitted and received at 0.3, 0.6, 1.2, 2.4, 4.8, 9.6 and 19.2k baud.

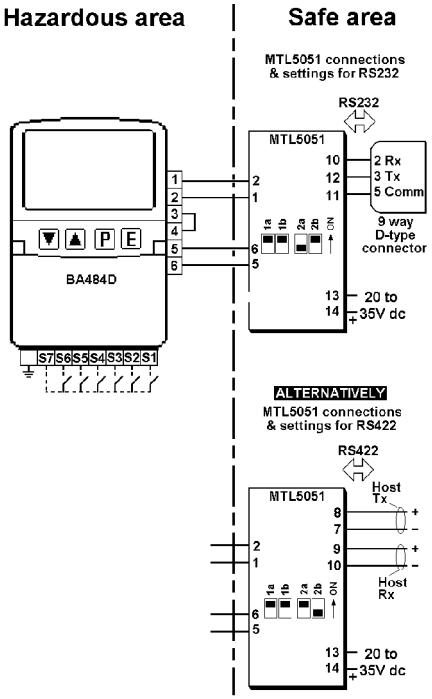

Fig 6 Four wire system for RS232 or RS422

5.3 Switch outputs

Each switch output is a galvanically isolated single pole solid state switch output as shown in Fig 7.

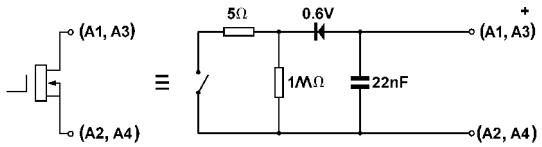

Fig 7 Equivalent circuit of each switch output

The output is polarised and current will only flow in one direction. Terminals A1 and A3 should be connected to the positive side of the supply.

Ron = 5Ω + 0.7V
Roff = greater than 1MΩ

Note: Because of the series protection diode, some test meters may not detect a closed alarm output

CAUTION

These switch outputs should not be used for critical safety applications such as an emergency shut down system.

When the BA484D power supply is turned off or disconnected, both BA484D switch outputs will open irrespective of how they have been programmed.

See section 4.5 for the intrinsic safety parameters.

6. INSTALLATION

6.1 Location

The BA484D serial text display is housed in a robust IP66 glass reinforced polyester (GRP) enclosure incorporating armoured glass window and stainless steel fittings. It is suitable for exterior mounting in most industrial environments, including off-shore and waste water treatment installations. Please consult BEKA associates if high vibration is anticipated.

The BA484D enclosure is surface mounting. Accessory kits described in sections 9.2 of this manual enable the instrument to be mounted onto a vertical or horizontal pipe.

The field terminals and the two mounting holes are located in a separate compartment with a sealed cover allowing the instrument to be installed without exposing the display assembly.

The BA484D earth terminal is connected to the internal EMC filters. For maximum radio frequency interference rejection this terminal should be connected to a local earth, or to a cable screen which is earthed in the safe area.
The BA484D enclosure is supplied with a bonding plate to ensure electrical continuity between the three conduit / cable entries.

6.2 Installation Procedure

Fig 8 illustrates the instrument installation procedure.

a. Remove the instrument terminal cover by unscrewing the two captive 'A' screws.

b. Mount the instrument on a flat surface and secure with two M6 screws through the 'B' holes. Alternatively use one of the mounting kits described in section 9.2

c. Remove the temporary hole plug and install an appropriate IP rated cable gland or conduit fitting. If more than one entry is required, one or both of the IP66 stopping plugs may be replaced with an appropriate IP rated cable gland or conduit fitting.

d. Connect the field wiring to the terminals as shown in Fig 9.

e. Replace the instrument terminal cover and evenly tighten the two 'A' screws.

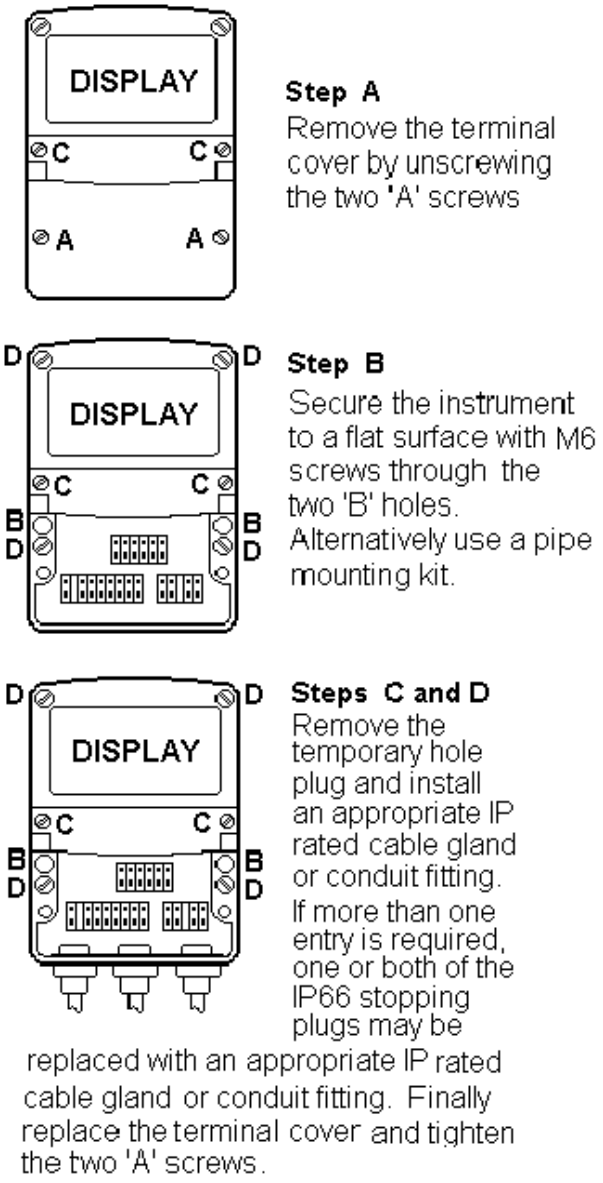

Fig 8 BA484D installation procedure

6.3 EMC

The BA484D complies with the European EMC Directive and with the UK statutory requirements. For specified immunity, all wiring should be in screened twisted pairs with the screens earthed at one point in the safe area.

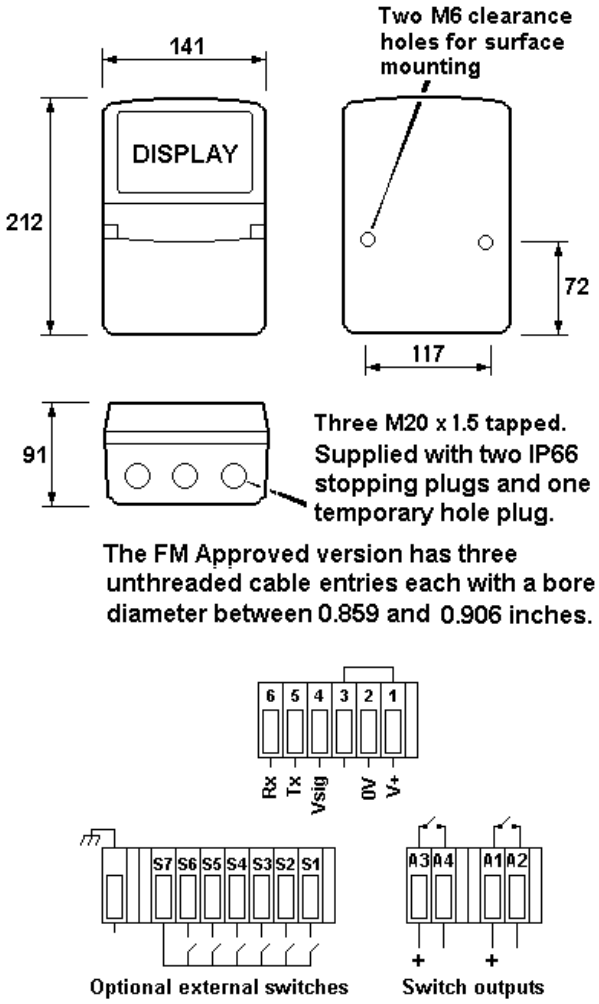

Fig 9 Dimensions and terminal connections

7. CONFIGURATION

Before the BA484D can be commissioned it must be configured to be compatible with the host's communications format and to have the required functions enabled.

The BA484D is configured via the four front panel push-buttons. All the configuration functions are contained in an easy to use menu shown in Fig 10. Where necessary the sub-menus contain on-screen prompts to guide the user through each adjustment.

When navigating through the configuration menu, the push-button(s) should be held until the required screen is displayed.

7.1 Default configuration

Unless otherwise requested at time of ordering, BA484D text displays will be supplied configured as follows:

Baud rate	9.6k
Data bits	8
Stop bit	1
Parity	None
Protocol	BEKA
Units	Single
Address	0
Operational mode	1
Keypad	Internal
Display brightness	100%
Display contrast	50%
Limit backlight	On
Quick access menu	On
Show Status Text	On
Set Last Valid Input	8
Quick access menu code	0000
Configuration menu access code.	0000
Key Mode	0
Screens	Text Display

7.2 Accessing the configuration menus

Throughout this manual push-buttons are shown in italics e.g. *P* or *Up* push-button, and legends displayed by the instrument are shown within inverted commas e.g. 'Please enter code'.

The configuration menu is accessed by operating the *P* and *E* push-buttons simultaneously. If the BA484D is not protected by an access code the main menu will be displayed. If an access code other than the default code 0000 has already been entered, the BA484D will request that the access code be entered.

Using the *Up* or *Down* button set the first digit of the code which will be flashing. Pressing *P* will transfer control to the next digit which should be adjusted in the same way. When all four digits have been set, pressing the *E* button will enter the access code. If the code is correct the main menu will be displayed, if the code is incorrect 'Invalid code' will be displayed.

When entering an access code, timeout will occur and the instrument will automatically return to the operating mode ten seconds after the push-buttons were last operated. In all other menus timeout occurs after thirty seconds.

When the main menu is displayed the required sub-menu can be highlighted by scrolling through the menu using the *Up* or *Down* push-button. Operating the *P* push-button will display the highlighted sub-menu from which a further selection may be made. After a configuration parameter has been adjusted, pressing the *E* button will enter the selection and move the display up one level.

After the instrument configuration has been completed, operating the *E* push-button repeatedly will return the instrument display to the main menu. One more operation of the *E* button will then return the BA484D to the operating mode.

7.3 Summary of configurable functions

This section provides a brief explanation of each configurable function and should be read in conjunction with Fig 10.

Scripts

This is only included in the menu when a Script has been loaded into the BA484D. See *Serial Text Display – Programming Guide* for details.

View settings

Displays the instruments main communication settings. Adjustments can not be made from this sub-menu.

Baud rate

Data rate may be set to seven speeds between 0.3 and 19.2k baud. Allowable rates depend upon the system in which the BA484D is used.

Data bits

7 or 8 data bits may be selected. 8 bit data is required in BEKA mode for graphics, for error checked modes and for Modbus .

Stop bits

1 or 2 stop bits may be selected

Parity

An even, odd or no parity bit may be selected.

Protocol

BEKA, Legacy or Modbus protocol may be selected. The Legacy protocol is compatible with the MTL643.

Units

Selects single or multiple BA484D displays connected to a single BA201 or MTL5051.

Address

Each text display must be allocated a unique address within the following ranges:

Modbus protocol	1 – 247	
BEKA protocol	0 – 247	Zero reserved for
Legacy protocol	0 –15	single unit applications.

Op Mode

Five different levels of communications security to be selected, ranging from immediate execution of a command with no acknowledgement, to a requirement for a 16 bit cyclic redundancy check. See the *Serial Text Display - Programming Guide* for a detailed explanation.

Not available with Legacy protocol.

Key mode

Key press data can be returned in three ways. See Response Format Section in the *Serial Text Display - Programming Guide*. Not applicable with Legacy protocol.

Keypad

This function allows the instrument front panel push-buttons or external push-buttons to be used for operator inputs. Whichever are selected, the instrument front panel push-buttons are used for configuration.

This function is not available when Legacy protocol is selected.

Settings

Allows the backlight brightness and contrast of the BA484D display to be adjusted.

Screens

One of nine standard screens or a custom screen may be selected.

Not applicable with Legacy protocol.

Limit backlight

When ‘On’ is selected the maximum backlight brightness will be automatically set depending upon whether a ‘Single Unit’ or ‘Multiple Unit’ has been selected in the configuration menu.

When ‘Off’ is selected the automatic brilliance limit is overridden for special applications. e.g. Two text displays on a three wire system.

Quick access

This function enables the quick access menu described in section 7.4. When ‘On’ is selected an operator can adjust the screen brilliance and contrast without having access to other conditioning parameters.

Access code for the Quick Access Menu

‘Access Code’ in the display menu defines the four digit alphanumeric code that must be entered to gain access to the instrument’s quick access menu. Alpha characters are case sensitive. Default code 0000 allows direct access without a code.

Access code for the Configuration Menu

‘Code’ in the main menu defines the four digit alphanumeric code that must be entered to gain access to the instrument configuration menus. Alpha characters are case sensitive. Default code 0000 allows direct access without a code.

Status Text

The two single variable screens include a message ‘Status: Good or Status: Bad’, the Status Text function allows this message to be inhibited.

Variable Color

The background color of variables depends on the IN_X Status Coils. ‘Status: Good or Status: Bad’ set a normal or inverted color on the variable’s background. '*For further information regarding status please refer to the "Data Status" paragraph on page 8 of "Modbus Interface Guide" or page 16 of the "Programming guide”*

Last Valid Input

This function allows the number of process variables to be entered so that when scrolling the display unused screens are not shown.

Unit information

Displays the instrument model number and the firmware version.

Configuration defaults

‘Default’ allows the configuration default defined in section 7.1 to be globally set.

7.4 Quick Access Menu

The quick access menu allows an operator to adjust the backlight brilliance and the display contrast without having access to the other configuration parameters.

The quick access menu is accessed by operating the *P* and *Up* push-buttons simultaneously. If the quick access menu is not protected by an access code the brilliance and contrast controls will be displayed immediately. If an access code other than the default code 0000 has already been entered, the BA484D will request that the access code be entered. Section 7.2 explains how an access code should be entered.

The backlight brilliance is adjusted using the *Up* and *Down* push-buttons. Operating the P push-button will transfer control to the display contrast adjustment. When both are set as required operating the *E* button will store both settings and return the instrument to the operating mode.

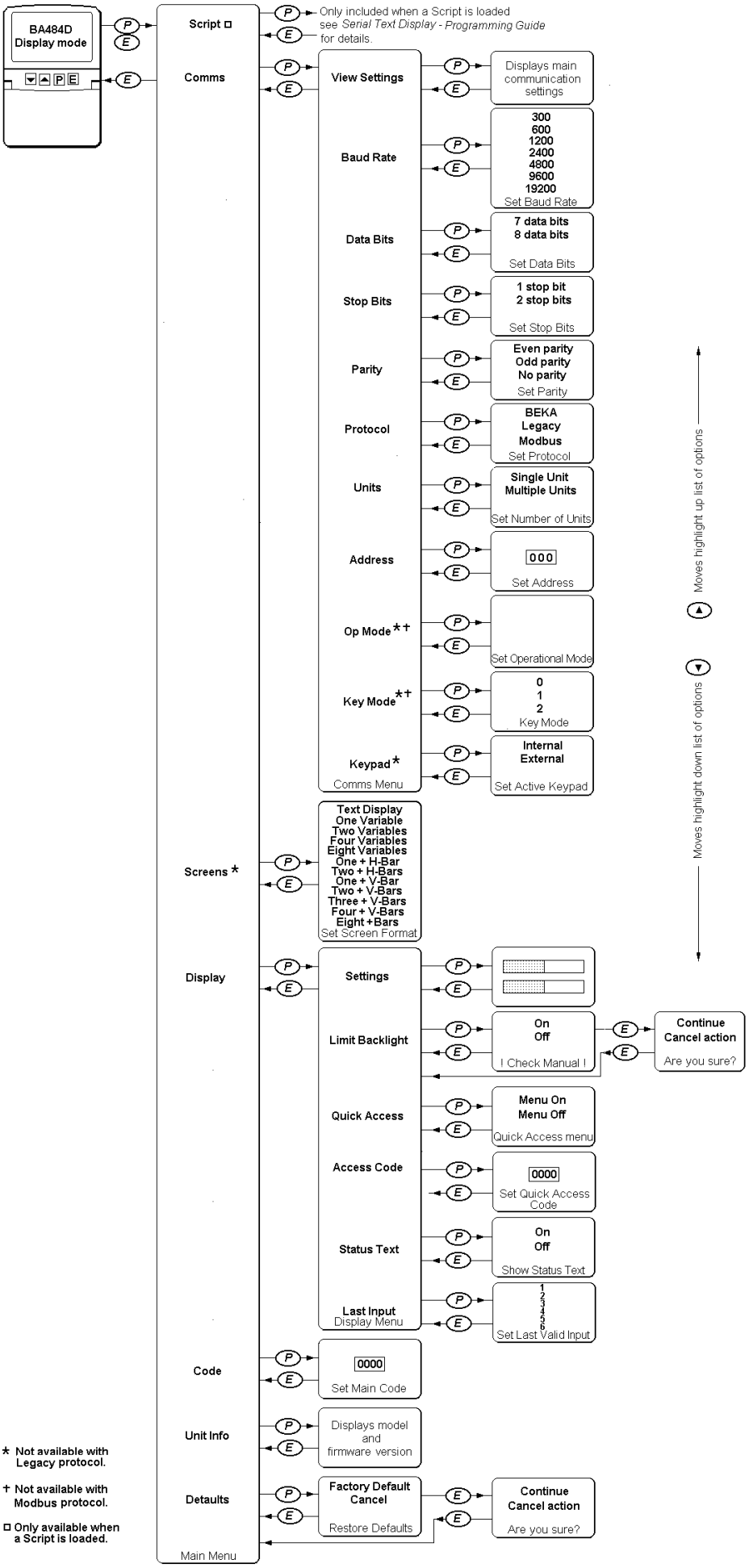

Fig 10 Structure of Configuration Menu

8. MAINTENANCE

8.1 Fault finding during commissioning

If a BA484D fails to function during commissioning the following procedure should be followed:

Symptom	Cause	Check:
No Display	No Power Incorrect wiring	That there is 10 to 14 volts between terminals 1 and 2 of the six way terminal block. Terminal 1 should be positive.
No Communication	Communications parameters incorrectly set	Baud rate, data bits, stop bits and parity settings match those of the host. If MTL5051 used. Position of configuration switches on the MTL5051 Serial Data Comms Isolator. If BA201 used. Port on BA201 Communications Isolator
	Incorrect Protocol	Protocol settings in “Comms” Menu
	Incorrect wiring	Wiring is as shown in diagram for the chosen configuration
	Address incorrect in Multidrop Mode	Address setting in “Comms” menu
Poor Communication	Too many BA484D displays on the line. Lines too long. Communication speed too fast.	Configuration settings. Installation guidelines
Dark Display	Contrast too high	Contrast level in “Display Settings” menu
No Backlight or Backlight dim	Backlight off or set low or Multidrop mode in use	Brightness level in “Display Settings” menu Units setting in “Comms” menu
Cannot enter configuration menu	Keys not held for long enough (up to 2 seconds required) Menu inhibited	Send “Configuration Enable” command (BEKA protocol) Restart unit (Legacy mode)

8.2 Fault finding after commissioning

ENSURE PLANT SAFETY BEFORE STARTING MAINTENANCE

Live maintenance is permitted on intrinsically safe equipment installed in a hazardous area, but only certified test equipment should be used unless a gas clearance certificate is available.

If a BA484D fails after it has been functioning correctly, the table shown in section 8.1 may help to identify the cause of the failure.

If this procedure does not reveal the cause of the fault, it is recommended that the instrument is replaced.

8.3 Servicing

We recommend that faulty BA484D serial text displays are returned to BEKA associates or to your local agent for repair.

8.4 Routine maintenance

The mechanical and electrical condition of the instrument should be regularly checked. Initially annual inspections are recommended, although the inspection frequency should be adjusted to suit the environmental conditions.

8.5 Guarantee

Instruments which fail within the guarantee period should be returned to BEKA associates or your local agent. It is helpful if a brief description of the fault symptoms is provided.

8.6 Customer comments

BEKA associates is always pleased to receive comments from customers about our products and services. All communications are acknowledged and whenever possible, suggestions are implemented.

9. ACCESSORIES

9.1 Tag number

The BA484D can be supplied with a blank or custom engraved stainless steel plate secured by two screws to the side of the instrument enclosure. This plate can accommodate:

1 row of 9 alphanumeric characters 10mm high

or 1 row of 11 alphanumeric characters 7mm high

or 2 rows of 18 alphanumeric characters 5mm high

9.2 Pipe mounting kits

Two pipe mounting kits are available for securing the BA484D to a horizontal or vertical pipe.

BA392D Stainless steel bracket secured by two worm drive hose clips for 60 to 80mm outside diameter pipes.

BA393 Heavy duty stainless steel bracket secured by a single 'V' bolt. Will clamp to any pipe with an outside diameter between 40 and 80mm.

9.3 Serial Text Display - Programming Guide

A detailed guide to programming the BA484D serial text display using BEKA protocol may be requested from the BEKA sales office or downloaded from the BEKA website at www.beka.co.uk.

9.4 Serial Text Display – Modbus Guide

This guide explains how to use the BA484D serial text display as a slave in Modbus RTU systems. It may be requested from the BEKA sales office or downloaded from the BEKA website at www.beka.co.uk.

10. INDEX

Subject	Section
Address	7.3
ATEX Directive	4.1; 4.7
Dust certification	Appendix 2
BA201 Communications Isolator.	2., 4.3, 5.1
Backlight	5.1, 5.2, 7.1
BEKA protocol	3.3
Cable	
Length	5.1.1, 5.2.1
Parameters	4.4, 4.5, 5.1.1
Certificates	
EC-Type Examination	4.1
Factory Mutual (FM)	Appendix 3
Factory Mutual (cFM)	Appendix 3
IECEx	Appendix 4
Label	4.6
Communication speed	5.
Configuration	7.
Access	7.2
Default settings	7.1
Structure	Fig 10
Quick access menu	7.4
Dust certification	Appendix 2 & 4.
EMC	6.3
External switches	4.4
Factory Mutual (FM)	Appendix 3
Fault finding	
During commissioning	8.1
After commissioning	8.2
Galvanic isolators	4.3, 5
Gas groups	4.2
Getting Started Quickly	Appendix 1
Guarantee	8.5
Installation	6.2
Intrinsic safety	1; 4; 5; A3.2
Legacy protocol	3.1
Location	6.1
Maintenance	8.
Routine	8.4
Modbus	3.2, 9.4
Multidrop	5.
MTL643 display	3.1
MTL5051 Serial data comms isolator.	2., 4.3, 5.2 7.3
MTL5025 galvanic isolator	2., 5.
Nonincendive	A3.3
Notified Body	1
Pattern matching	1.1, 1.2, 3.
Power supply	4.3
Servicing	8.3
Standard screens	3.2
Switch outputs	4.5
Systems	
2 wire	5.1.2, 5.2.3
3 wire	5.1.3, 5.2.4
4 wire	5.2.5
Certificates	4.7
T rating	4.2
Terminal numbers	Fig 9
Timeout	7.2
Scripts	1.1, 1.2, 7.3
Zones	4.2, Appendix 2, Appendix 4.

APPENDIX 1

Getting Started Quickly

This appendix provides simple step-by-step instructions to get a BA484D Serial Text Display functioning quickly.

Communication

1. Using a BA201 Communication Isolator choose a two or three wire system – see Figs 2 and 3. Connect the safe area communication cable to the required port on the BA201.

   or

   Using a MTL5051 Serial Data Comms Isolator choose a two, three or four wire system - see Figs 4, 5 & 6.
   Set the DIP switches on the top of the MTL5051 isolator to provide the required port (RS232 or RS422) and connect the safe area communication cable to the correct terminals.

2. Apply power to the galvanic isolator(s).

3. The BA484D will display the model number and firmware details for a few seconds before reverting to the BEKA logo.

4. To set the instrument's basic communications parameters enter the configuration menu by pressing the *P* and *E* push-buttons simultaneously. Fig 10 shows the menu structure and navigation.
   The *P* button enters a menu, the *Up* and *Down* buttons select the required sub-menu or setting and the *E* button enters the selection and moves the display up one level.

   The following menu items must be configured before use:

Parameter	Select
Baud Rate	Comms. speed
Data Bits	7 or 8 data bits
Stop Bits	1 or 2 stop bits
Parity	Even, odd or none
Protocol	BEKA, Legacy or Modbus.
Units	1 or more displays per BA201 or MTL5051 isolator.
Address	Range depends on protocol selected: Modbus 1 to 247 BEKA 0 to 247 Legacy 0 to 15

The host and the BA484D Serial Text Display should now be able to communicate with each other.

Modbus protocol

Using the Modbus RTU protocol and one of the eleven standard screens is the easiest way to display process variables on a BA484D serial text display.

Select one of the standard screens shown in section 3.2 from the 'Screens' sub-menu.

Modbus register addresses for the instrument are shown in the *BEKA Serial Text Display – Modbus Interface Guide,* which is available from the BEKA sales office or may be downloaded from www.beka.co.uk

BEKA protocol

Please refer to the *BEKA Serial Text Display – Programming Guide* which is available from the BEKA sales office or may be downloaded from www.beka.co.uk

APPENDIX 2
ATEX & UKEX dust certification

A2.0 ATEX & UKEX dust certification

In addition to ATEX & UKEX certification permitting installation in explosive gas atmospheres which is described in the main section of this instruction manual, the BA484D is available ATEX & UKEX certified for use in the presence of combustible dusts. If dust certification is required it must be requested when the BA484D serial text display is purchased.

CAUTION

Before installing a BA484D serial text display in the presence of a combustible dust, ensure that the certification information label which is located on the top of the instrument specifies dust certification - see section A2.2

A2.1 Zones and Maximum Surface Temperature

The BA484D has been certified as Group II, Category 2D apparatus Ex ia IIIC T80ºC Db Tamb = -40ºC to 60ºC. When installed as specified by IEC 60079:14, *Electrical installations design, selection and erection*, the serial text display may be installed in:

Zone 21 explosive atmosphere in the form of a cloud of combustible dust in air is likely to occur occasionally in normal operation.

Zone 22 explosive atmosphere in the form of a cloud of combustible dust in air is not likely to occur in normal operation, but if it does occur, will only persist for a short period.

Be used with dusts having a Minimum Ignition Temperature of:

Dust cloud	120°C
Dust layer on BA484D up to 5mm thick	155°C
Dust layer on BA484D over 5mm thick.	Refer to EN 60079-14

At an ambient temperature between –40ºC and +60ºC.

Note: Operating temperature range of BA484D is –20ºC and +60ºC.

A2.2 Certification Label Information

The certification label is fitted in a recess on the top outer surface of the enclosure. It shows the dust certification information including the maximum surface temperature and ingress protection, in addition to the gas certification information. Non European gas and dust information, including certification numbers may also be shown.



The instrument serial number and date of manufacture are recorded on a separate label inside the terminal compartment.

A2.3 Calibration & maintenance

The dust certification relies on the serial text display enclosure being dust-tight. Therefore the control and terminal covers should only be removed when dust can not enter the instrument enclosure. Before replacing the control and terminal covers ensure that the sealing gaskets are undamaged and are free from foreign bodies.

APPENDIX 3
FM approval for use in USA and
cFM Approval for use in Canada

A3.1 Factory Mutual Approval

For installations in the USA and Canada the BA484D has FM and cFM intrinsically safe and nonincendive approvals, project identification 3025514 and 3032633C. Copies of the Certificates of Compliance may be downloaded from www.beka.co.uk or requested from the BEKA associates sales office or our US agent.

The FM Approved version of the BA484D Serial Text Display is identical to the ATEX version except the three M20 x 1,5 tapped cable entries are replaced by three plain unthreaded 22.25mm diameter entries. Approved hubs and glands are listed in note 9 of Control Drawing CI480-07 and note 8 of Control Drawing CI480-08. The certification label on the FM Approved version includes ATEX gas certification information so that the BA484D Serial Text Display may be used in systems covered by either authority.

A3.2 Intrinsic safety approval

The BA484D is approved to the FM Class 3610 intrinsic safety standard for use in hazardous (classified) locations. Installations must comply with BEKA associates Control Drawing CI480-07, which is attached to this Appendix, ANSI/ISA RP12.06.01 'Installation of Intrinsically Safe Systems for Hazardous (Classified) Locations' and with the National Electrical Code ANSI/NFPA70.

Canadian installations must comply with the BEKA Control Drawing CI480-07 and with the Canadian Electrical Code C22.2.

The BA484D has a T4 rating at ambient temperatures up to +60°C and may be used with the following gases and dusts:

Intrinsic Safety	
Division 1 or 2	
Class I	Group A & B Group C Group D
Class II	Group E, F & G
Class III	
Zone 0, 1 or 2	
Class 1	Group IIC Group IIB Group IIA

The FM entity parameters are similar to the ATEX parameters. The intrinsically safe circuits shown in this manual may therefore be used for installations in the USA.

For use with the BA201 Communications Isolator the installation must comply with the FM Approvals Control Drawing for the BA201 Communications Isolator CI201-12 which is included in this appendix.

For use with the MTL5051 serial data comms Isolator the installation must comply with the FM Approvals Control Drawing for the BA484D serial text display CI480-07 which is included in this appendix.

A3.3 Nonincendive approval

The BA484D is Class 3611 nonincendive approved by Factory Mutual allowing it to be installed in Division 2 hazardous (classified) locations without the need for galvanic isolator although a BA201 or MTL5051 is still required to perform data conversion. Installations must comply with the BEKA associates Control Drawing CI480-08, which is included to this appendix, and with the National Electrical Code ANSI/NFPA70.

Canadian installations must comply with the BEKA Control Drawing CI480-08 and with the Canadian Electrical Code C22.2.

The BA484D has a T4 rating at ambient temperatures up to +60°C and may be used with the following gases and dusts:

Nonincendive	
Division 2	
Class I	Group A & B Group C Group D
Class II	Groups E, F & G
Class III	
Zone 2	
Class I	Group IIC Group IIB Group IIA

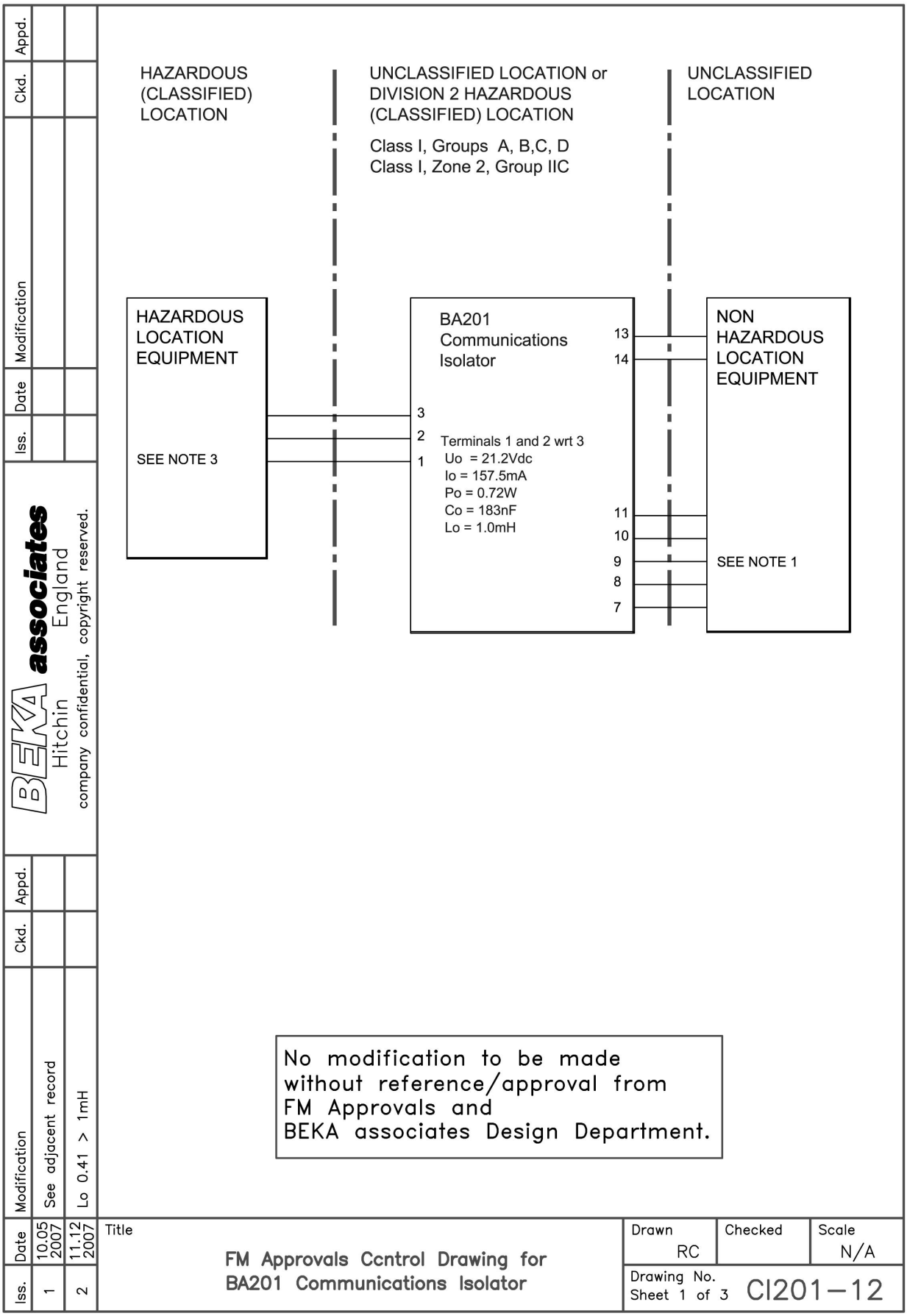

No modification to be made
without reference/approval from
FM Approvals and
BEKA associates Design Department.

Iss.	Date	Modification
1	10.05 2007	See adjacent record
2	11.12 2007	Lo 0.41 > 1mH

Appd. | Ckd. | Modification | Date | Iss.

BEKA associates Hitchin England

company confidential, copyright reserved.

Title

FM Approvals Control Drawing for BA201 Communications Isolator

Drawn	Checked	Scale
RC		N/A

Drawing No. Sheet 1 of 3 CI201–12

File 201–12s01 date 11.12.07

Iss.	Date	Modification	Ckd.	Appd.
1	10.05 2007	See adjacent record		
2	11.12 2007	Lo 0.41 > 4.1mH (x2), Lo 0.32 > 3.2mH		

BEKA associates Hitchin England

company confidential, copyright reserved.

TWO WIRE SYSTEM FOR COMMUNICATIONS WITH BA484D AND/OR BA488C SERIAL TEXT DISPLAYS

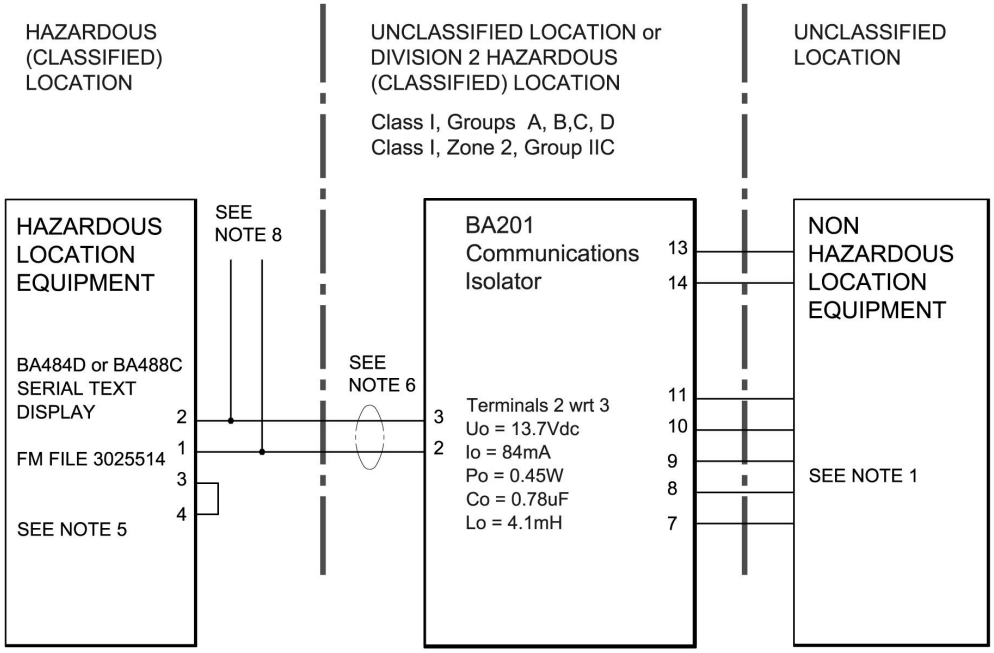

THREE WIRE SYSTEM FOR COMMUNICATIONS WITH BA484D AND/OR BA488C SERIAL TEXT DISPLAYS

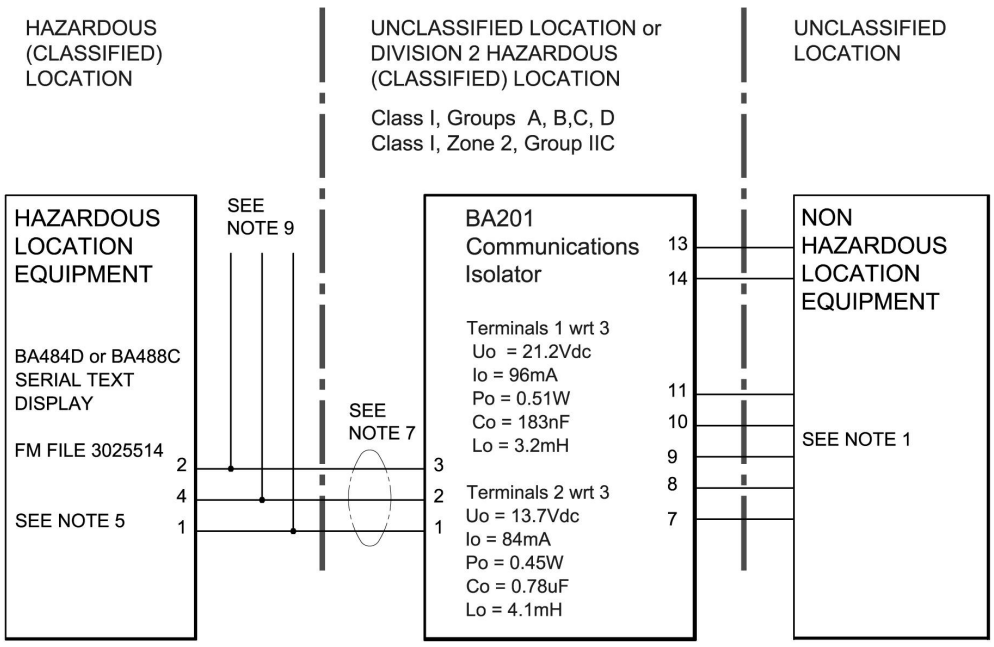

Title

FM Approvals Control Drawing for BA201 Communications Isolator

Drawn	Checked	Scale
RC		N/A

Drawing No. CI201–12
Sheet 2 of 3

File 201–12s01 date 11.12.07

Iss.	Date	Modification	Ckd.	Appd.
1	10.05 2007	See adjacent record		
2	11.12 2007	Lcable 0.41 > 4.1mH (x2), Lcable 0.32 > 3.2mH		

BEKA associates Hitchin England

company confidential, copyright reserved.

1. The unclassified location equipment connected to the BA201 shall not use or generate more than 250V rms or 250V dc.

2. The installation shall be in accordance with ANSI/ISA RP 12.06.01 'Installation of Intrinsically Safe Systems for Hazardous (Classified) Locations' and the National Electrical Code ANSI/NFPA 70.

   Installations in Canada shall be in accordance with the Canadian Electrical Code C22.2

3. The Hazardous Location equipment may be:

   Simple apparatus e.g. mechanically activated switches

   OR FM approved equipment, or for installations in Canada CFM approved equipment, both having entity parameters complying with the following requirements:

Ui	equal to or greater than	Uo or Vt
Ii	equal to or greater than	Io or It
Lcable + Li	equal to or less than	Lo
Ccable +Ci	equal to or less than	Co

4. The BA201 has two intrinsically safe outputs connected to terminals 1 and 2 respectively, both outputs share common terminal 3.

5. BA484D or BA488C Serial Text Displays FM File 3025514

6.

Lcable	equal to or less than	4.1mH
Ccable	equal to or less than	780nF

7.

For terminals 1 and 3 of BA201

Lcable	equal to or less than	3.2mH – sum of Li
Ccable	equal to or less than	183nF – sum of Ci

For terminals 2 and 3 of BA201

Lcable	equal to or less than	4.1mH
Ccable	equal to or less than	780nF

8. Up to two BA484D and/or BA488C serial text displays may be connected to one BA201 communications isolator.

9. Up to four BA484D and/or BA488C serial text displays may be connected to one BA201 communications isolator.

10. When the BA201 is installed in a Division 2 or Zone 2 Hazardous location, a warning label must be prominently affixed near the BA201 which warns that the BA201 must not be removed or inserted unless the area is known to be nonhazardous.

Title	Drawn	Checked	Scale
FM Approvals Control Drawing for BA201 Communications Isolator	RC		N/A
	Drawing No. Sheet 3 of 3	CI201–12	

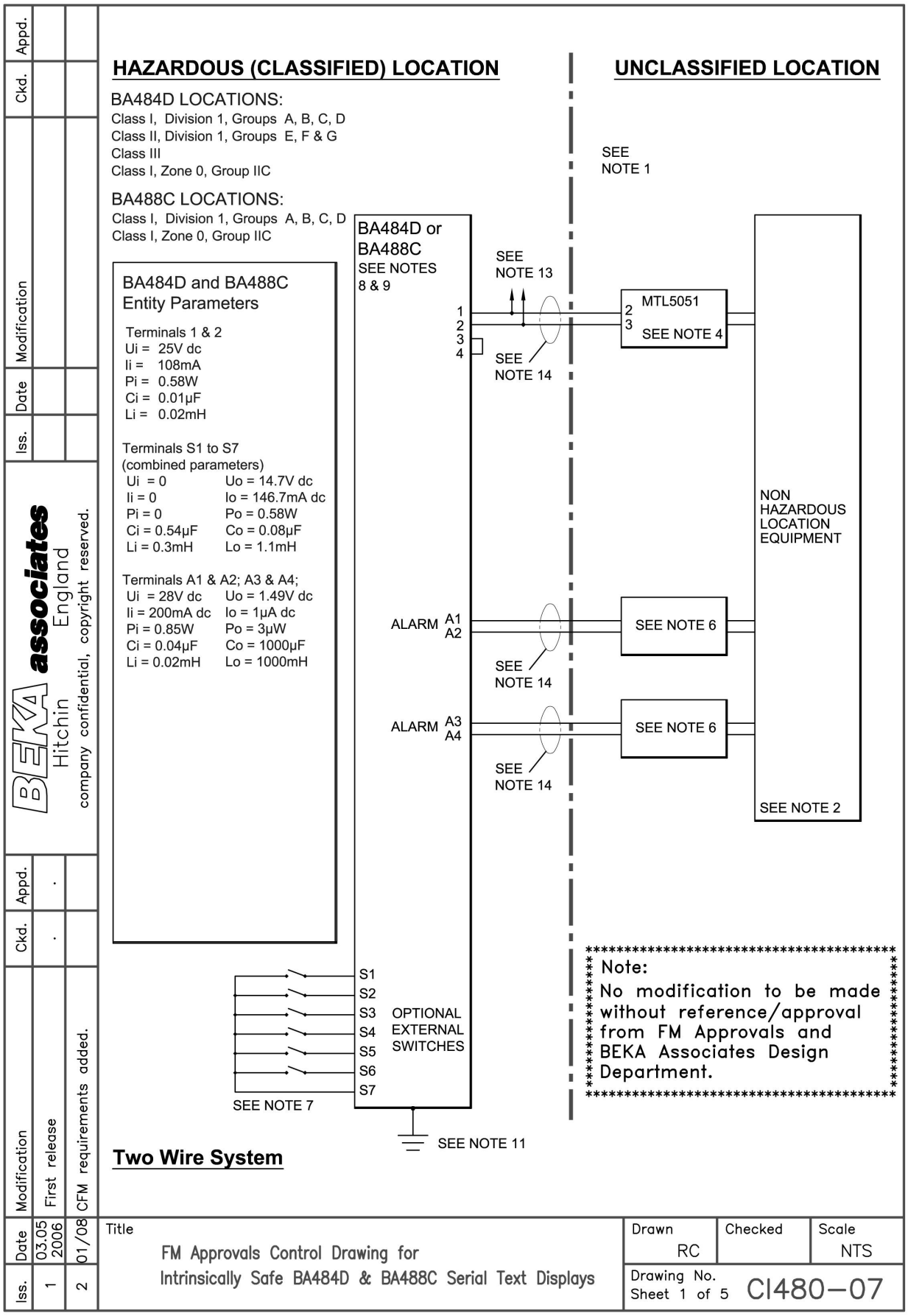
HAZARDOUS (CLASSIFIED) LOCATION
UNCLASSIFIED LOCATION
BA484D LOCATIONS:
Class I, Division 1, Groups A, B, C, D
Class II, Division 1, Groups E, F & G
Class III
Class I, Zone 0, Group IIC
BA488C LOCATIONS:
Class I, Division 1, Groups A, B, C, D
Class I, Zone 0, Group IIC
BA484D and BA488C Entity Parameters
Terminals 1 & 2
Ui = 25V dc
Ii = 108mA
Pi = 0.58W
Ci = 0.01µF
Li = 0.02mH
Terminals S1 to S7 (combined parameters)
Ui = 0 Uo = 14.7V dc
Ii = 0 Io = 146.7mA dc
Pi = 0 Po = 0.58W
Ci = 0.54µF Co = 0.08µF
Li = 0.3mH Lo = 1.1mH
Terminals A1 & A2; A3 & A4;
Ui = 28V dc Uo = 1.49V dc
Ii = 200mA dc Io = 1µA dc
Pi = 0.85W Po = 3µW
Ci = 0.04µF Co = 1000µF
Li = 0.02mH Lo = 1000mH
BA484D or BA488C
SEE NOTES 8 & 9
SEE NOTE 1
SEE NOTE 13
SEE NOTE 14
MTL5051
SEE NOTE 4
NON HAZARDOUS LOCATION EQUIPMENT
SEE NOTE 2
ALARM A1 A2
ALARM A3 A4
SEE NOTE 6
SEE NOTE 6
S1
S2
S3
S4
S5
S6
S7
OPTIONAL EXTERNAL SWITCHES
SEE NOTE 7
SEE NOTE 11
Note:
No modification to be made without reference/approval from FM Approvals and BEKA Associates Design Department.
Two Wire System
BEKA associates Hitchin England
company confidential, copyright reserved.
Appd.
Ckd.
Modification
Date
Iss.
First release
CFM requirements added.
03.05 2006
01/08
1
2
Title
FM Approvals Control Drawing for Intrinsically Safe BA484D & BA488C Serial Text Displays
Drawn RC
Checked
Scale NTS
Drawing No. CI480–07
Sheet 1 of 5
File: CI480–07s01.dwg 30.01.08

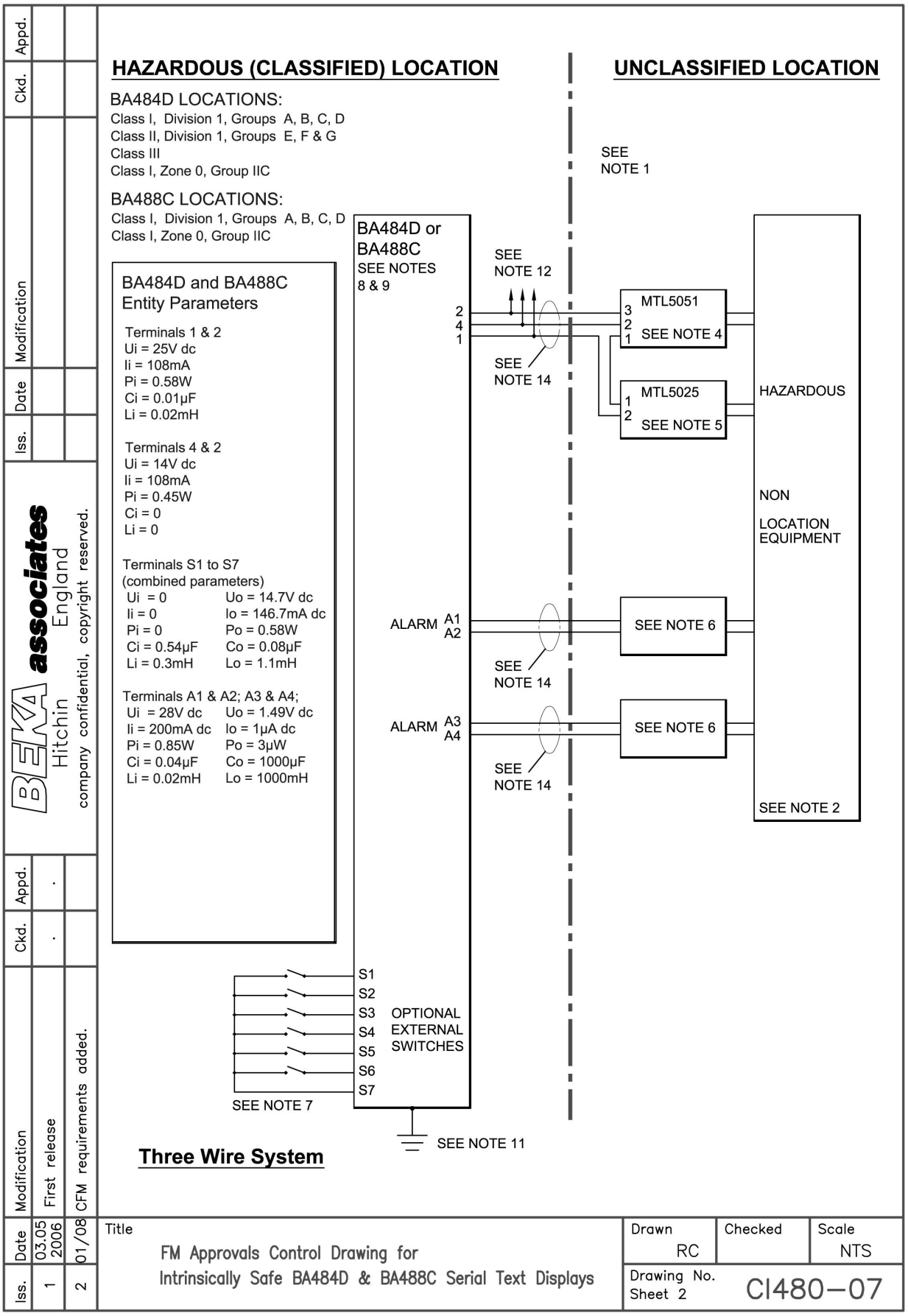
HAZARDOUS (CLASSIFIED) LOCATION
UNCLASSIFIED LOCATION
BA484D LOCATIONS:
Class I, Division 1, Groups A, B, C, D
Class II, Division 1, Groups E, F & G
Class III
Class I, Zone 0, Group IIC
BA488C LOCATIONS:
Class I, Division 1, Groups A, B, C, D
Class I, Zone 0, Group IIC
BA484D and BA488C Entity Parameters
Terminals 1 & 2
Ui = 25V dc
Ii = 108mA
Pi = 0.58W
Ci = 0.01µF
Li = 0.02mH
Terminals 4 & 2
Ui = 14V dc
Ii = 108mA
Pi = 0.45W
Ci = 0
Li = 0
Terminals S1 to S7
(combined parameters)
Ui = 0 Uo = 14.7V dc
Ii = 0 Io = 146.7mA dc
Pi = 0 Po = 0.58W
Ci = 0.54µF Co = 0.08µF
Li = 0.3mH Lo = 1.1mH
Terminals A1 & A2; A3 & A4;
Ui = 28V dc Uo = 1.49V dc
Ii = 200mA dc Io = 1µA dc
Pi = 0.85W Po = 3µW
Ci = 0.04µF Co = 1000µF
Li = 0.02mH Lo = 1000mH
BA484D or BA488C
SEE NOTES 8 & 9
SEE NOTE 1
SEE NOTE 12
SEE NOTE 14
MTL5051
SEE NOTE 4
MTL5025
SEE NOTE 5
HAZARDOUS
NON LOCATION EQUIPMENT
SEE NOTE 2
ALARM A1 A2
ALARM A3 A4
SEE NOTE 6
SEE NOTE 6
SEE NOTE 14
SEE NOTE 14
S1
S2
S3
S4
S5
S6
S7
OPTIONAL EXTERNAL SWITCHES
SEE NOTE 7
SEE NOTE 11
Three Wire System
BEKA associates Hitchin England
company confidential, copyright reserved.
Appd.
Ckd.
Modification
Date
Iss.
First release
CFM requirements added.
03.05 2006
01/08
1
2
Title
FM Approvals Control Drawing for
Intrinsically Safe BA484D & BA488C Serial Text Displays
Drawn RC
Checked
Scale NTS
Drawing No. CI480–07
Sheet 2
File: CI480–07s02.dwg 30.01.08

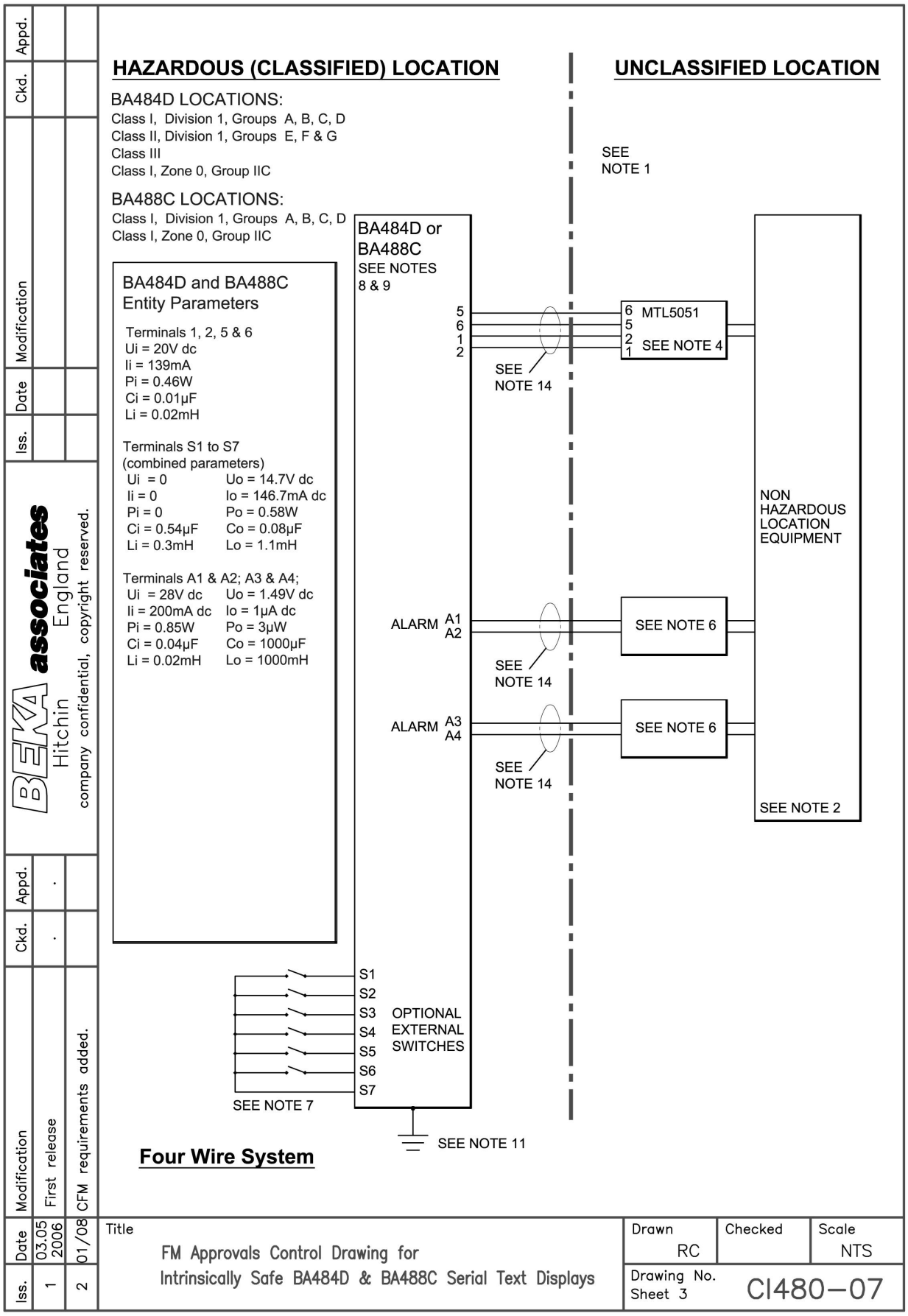

File: CI480–07s03.dwg 30.01.08

Iss.	Date	Modification	Ckd.	Appd.
1	03.05 2006	First release	.	.
2	01/08	CFM requirements added.		

BEKA associates Hitchin England

company confidential, copyright reserved.

Notes:

1. The associated intrinsically safe barriers must be FM approved and the manufacturers' installation drawings shall be followed when installing this equipment.
   For installations in Canada the associated intrinsically safe barriers and galvanic isolators must be CFM or CSA approved and the manufacturers' installation drawings shall be followed when installing the equipment.

2. The unclassified location equipment connected to the associated intrinsically safe barriers or galvanic isolators shall not use or generate more than 250V rms or 250V dc.

3. Installation shall be in accordance with ANSI/ISA RP 12.06.01 "Installation of Intrinsically Safe Systems for Hazardous (Classified) Locations" and the National Electrical Code ANSI/NFPA 70. Installations in Canada shall be in accordance with the Canadian Electrical Code C22.2

4. MTL5051 Serial-Data Communications Isolator FM File J.I. 3000682 CSA certificate 1000852

5. MTL5025 Solenoid / Alarm Driver FM File J.I. 3Z9A8.AX CSA certificate 1547041

6. One single channel or one channel of a dual channel associated intrinsically safe barrier or galvanic isolator with entity parameters complying with the following requirements:

Vo or Vt	equal to or less than	Vi
Io or It	equal to or less than	Ii
La	equal to or greater than	Lcable + Li
Ca	equal to or greater than	Ccable + Ci

7. Hazardous (classified) location equipment may be simple apparatus e.g. mechanically activated switches or FM, CFM or CSA Approved equipment with entity parameters complying with following requirements:

	equal to or less than	Vi
Vo or Vt	equal to or less than	Ii
Io or It	equal to or greater than	Lcable + Li
La	equal to or greater than	Ccable + Ci
Ca		

8. To maintain IP66 protection between the BA488C and the mounting panel:

   Four panel mounting clips should be used

   Minimum panel thickness should be 2mm (0.08inches) Steel
   3mm (0.12inches) Aluminium

   Outside panel finish should be smooth, free from particle inclusions, runs or build-up around cut-out.

   Panel cut-out should be 66.2 x 136.0mm -0.0 +0.5
   (2.60 x 5.35 inches -0.00 +0.02)

   Edges of panel cut-out should be deburred and clean

   Each panel mounting clip should be tightened to between: 20 and 22cNm
   (1.77 to 1.95 inLb)

Title: FM Approvals Control Drawing for Intrinsically Safe BA484D & BA488C Serial Text Displays

Drawn	Checked	Scale
RC		NTS

Drawing No. Sheet 4: CI480–07

File: CI480–07s04.dwg 30.01.08

9. When installed in a hazardous (classified) location the BA484D Serial Text Display shall be fitted with cable glands / conduit hubs selected from the following table

Metallic glands and hubs must be grounded - see note 10.

Class	Permitted gland or conduit hub
Class I	Any metallic or plastic cable gland or conduit hub that provides the required environmental protection.
Class II and III	**Crouse - Hinds Myler hubs** ST-1 STA-1 SSTG-1 STG-1 STAG-1 MHUB-1 HUB 1 **O-Z / Gedrey Hubs** CHM-50DT CHMG-50DT **Killark Glands** CMCXAA050 MCR050 MCX050

10. In addition to the supplied bonding plate, when metallic 2 or 3 glands or conduit hubs are fitted to a BA484D Serial Text Display, all metallic glands or conduit hubs must be connected together and grounded.

11. **WARNING:** The BA484D and BA488C Serial Text Display are manufactured from conductive plastic per Article 250 of the National Electrical Code the enclosures shall be grounded using the 'E' terminal on the terminal block.

12. Up to four BA484D and/or BA488C Serial Text Displays may be connected to one system.

13. Up to two BA484D and/or BA488C Serial Text Displays may be connected to one system.

14. Separate intrinsically safe circuit wiring shall comply with either:

    a. All conductors of each circuit shall be within a grounded metal shield.

    b. The conductors of each intrinsically safe circuit shall have insulation with a minimum thickness of 0.25mm (0.01in).

Iss.	Date	Modification	Ckd.	Appd.
1	03.05.2006	First release	.	.
2	01/08	CFM requirements added.		

BEKA associates Hitchin England

company confidential, copyright reserved.

Title: FM Approvals Control Drawing for Intrinsically Safe BA484D & BA488C Serial Text Displays

Drawn	Checked	Scale
RC		NTS

Drawing No. Sheet 5: CI480–07

File: CI480–07s05.dwg 30.01.08

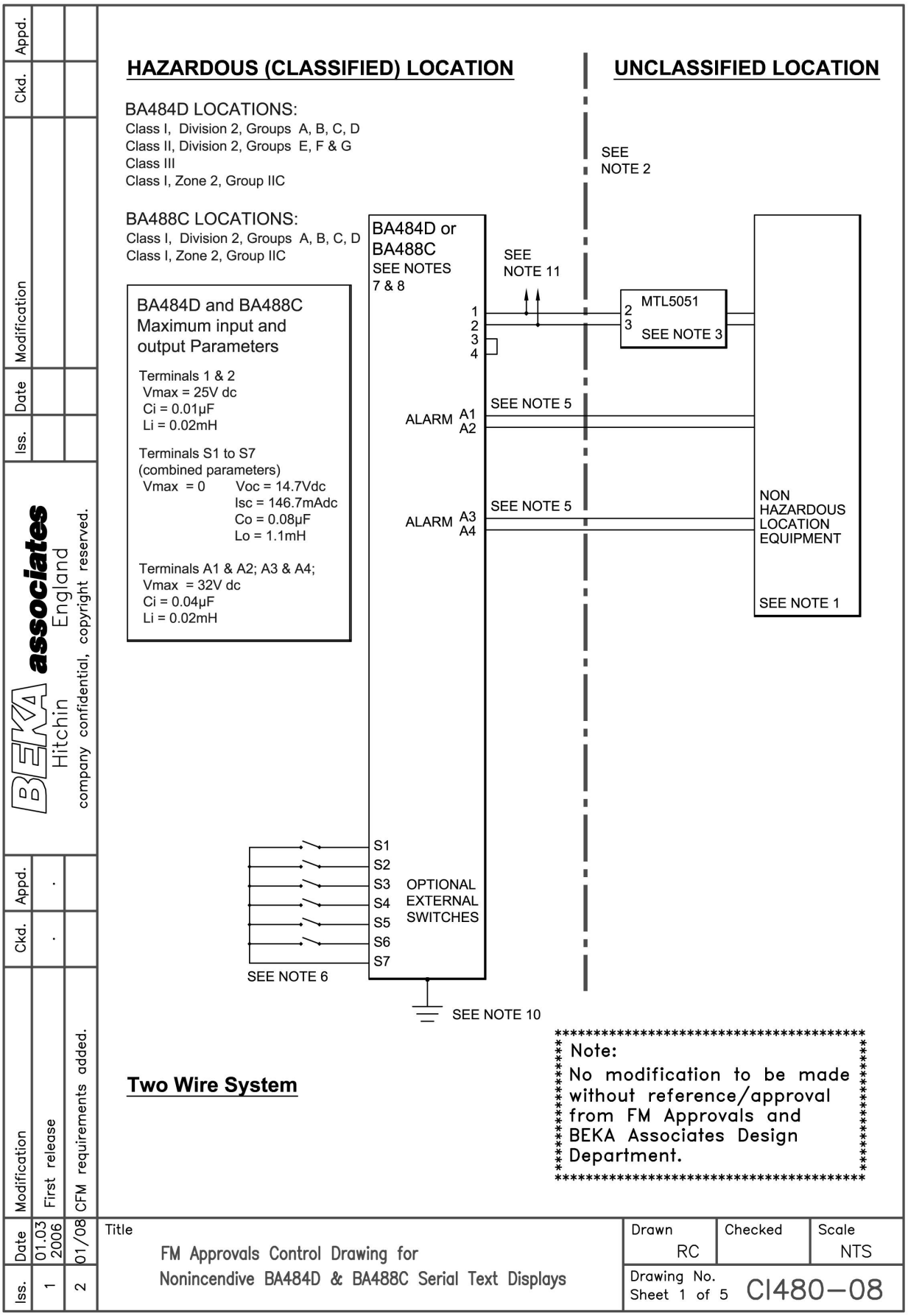
HAZARDOUS (CLASSIFIED) LOCATION
UNCLASSIFIED LOCATION
BA484D LOCATIONS:
Class I, Division 2, Groups A, B, C, D
Class II, Division 2, Groups E, F & G
Class III
Class I, Zone 2, Group IIC
BA488C LOCATIONS:
Class I, Division 2, Groups A, B, C, D
Class I, Zone 2, Group IIC
BA484D and BA488C
Maximum input and
output Parameters
Terminals 1 & 2
Vmax = 25V dc
Ci = 0.01µF
Li = 0.02mH
Terminals S1 to S7
(combined parameters)
Vmax = 0
Voc = 14.7Vdc
Isc = 146.7mAdc
Co = 0.08µF
Lo = 1.1mH
Terminals A1 & A2; A3 & A4;
Vmax = 32V dc
Ci = 0.04µF
Li = 0.02mH
SEE NOTE 2
BA484D or
BA488C
SEE NOTES
7 & 8
SEE NOTE 11
MTL5051
SEE NOTE 3
SEE NOTE 5
ALARM A1 A2
SEE NOTE 5
ALARM A3 A4
NON HAZARDOUS LOCATION EQUIPMENT
SEE NOTE 1
S1
S2
S3
S4
S5
S6
S7
OPTIONAL EXTERNAL SWITCHES
SEE NOTE 6
SEE NOTE 10
Two Wire System
Note:
No modification to be made without reference/approval from FM Approvals and BEKA Associates Design Department.
BEKA associates Hitchin England
company confidential, copyright reserved.
Modification
First release
CFM requirements added.
Date
01.03 2006
01/08
Iss.
1
2
Appd.
Ckd.
Title
FM Approvals Control Drawing for
Nonincendive BA484D & BA488C Serial Text Displays
Drawn RC
Checked
Scale NTS
Drawing No. CI480–08
Sheet 1 of 5
File: CI480–08s01.dwg 30.01.08

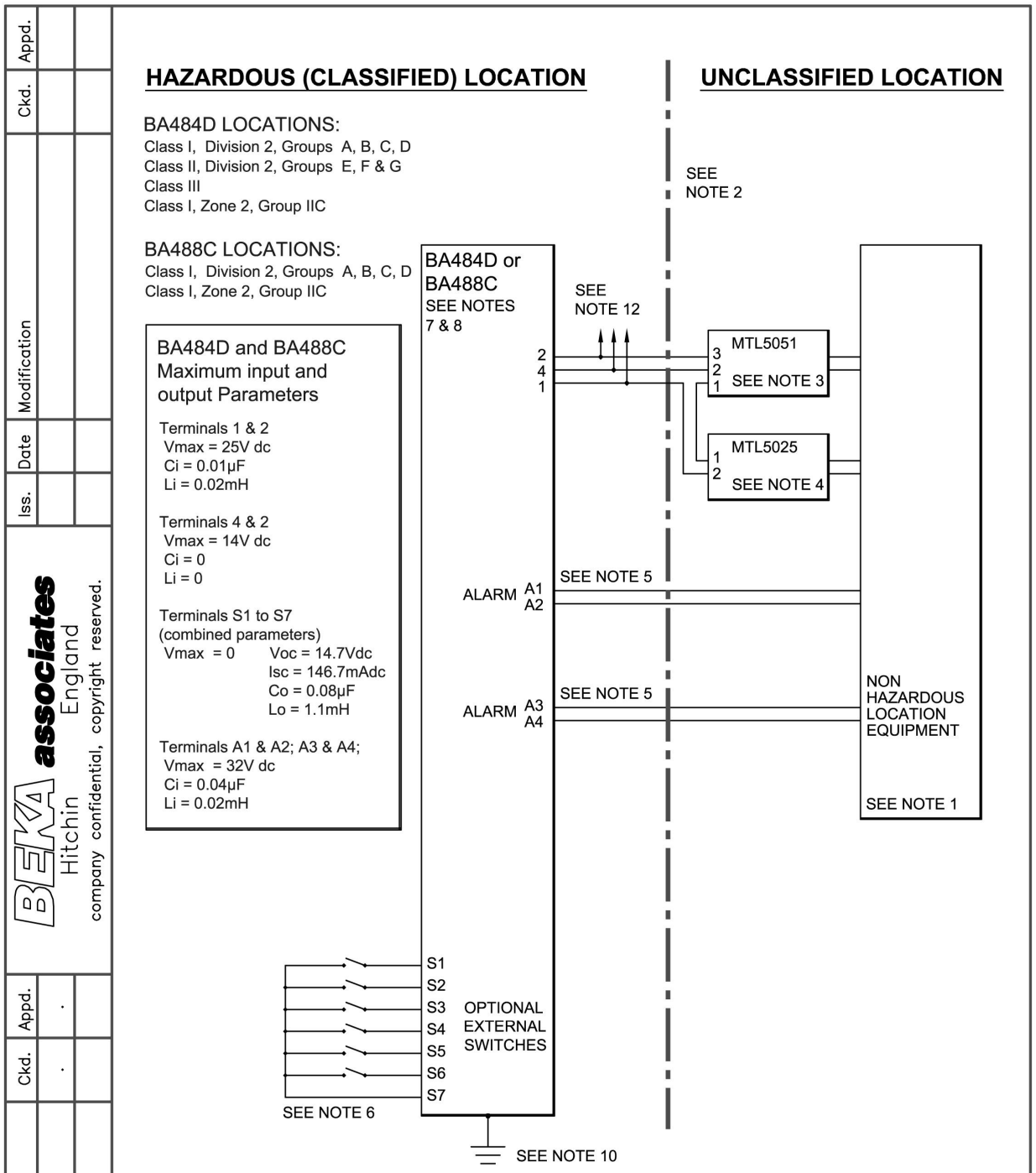

Three Wire System

Iss.	Date	Modification	Appd.	Ckd.	Appd.
1	01.03 2006	First release		.	
2	01/08	CFM requirements added.			

BEKA associates Hitchin England

company confidential, copyright reserved.

Title	Drawn	Checked	Scale
FM Approvals Control Drawing for Nonincendive BA484D & BA488C Serial Text Displays	RC		NTS
	Drawing No. Sheet 2	CI480–08	

File: CI480–08s02.dwg 30.01.08

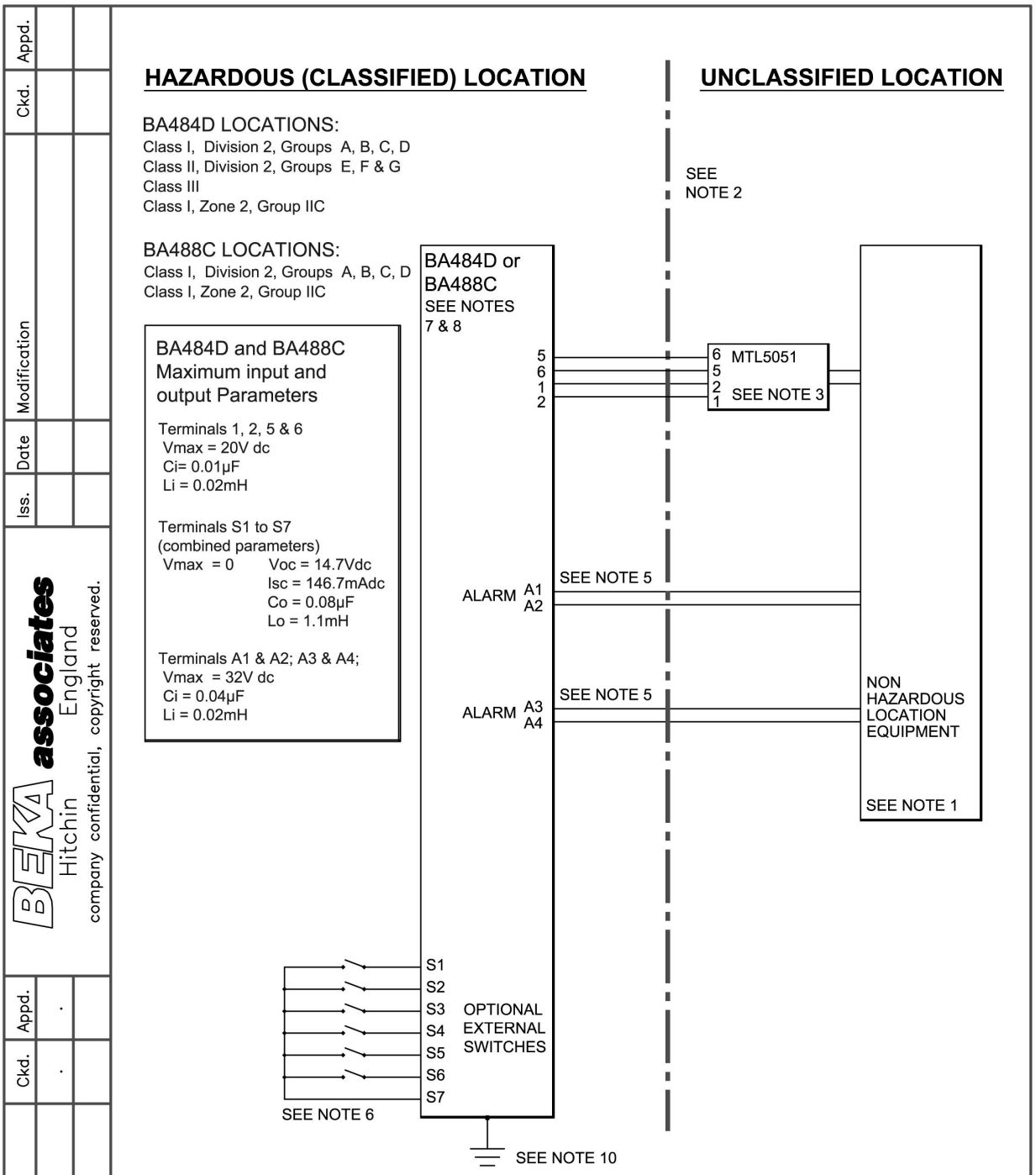

Four Wire System

Iss.	Date	Modification
1	01.03.2006	First release
2	01/08	CFM requirements added.

Appd. | Ckd. | Appd. | Ckd.

BEKA associates Hitchin England

company confidential, copyright reserved.

Title: FM Approvals Control Drawing for Nonincendive BA484D & BA488C Serial Text Displays

Drawn: RC | Checked: | Scale: NTS

Drawing No. Sheet 3: CI480–08

File: CI480–08s03.dwg 30.01.08

Notes:

1. The unclassified location equipment connected to the associated nonincendive field wiring apparatus must not use or generate more than 250V rms or 250V dc.

2. Nonincendive field wiring installations shall be in accordance with the National Electrical Code ANSI/NFPA 70. The Nonincendive Field Wiring concept allows interconnection of Nonincendive Field Wiring Apparatus with Associated Nonincendive Field Wiring Apparatus using any of the wiring methods permitted for unclassified locations.
   Installations in Canada shall be in accordance with the Canadian Electrical Code C22.2

3. FM & CSA Approved MTL5051 Serial-Data Communications Isolator installed in the unclassified location.

4. FM & CSA Approved MTL5025 Solenoid / Alarm Driver installed in the unclassified location.

5. Apparatus connected to the alarm contacts shall be FM, CFM or CSA Approved as Associated Nonincendive Field Wiring Apparatus and shall comply with the following requirements:

Voc	equal to or less than	Vmax
La	equal to or greater than	Lcable + Li
Ca	equal to or greater than	Ccable + Ci

6. Terminals S1 to S7 shall be connected to simple apparatus or volt free contacts of FM, CFM or CSA Approved Nonincendive Field Wiring Apparatus or FM, CFM or CSA Approved Associated Nonincendive Field Wiring Apparatus installed using Division 2 wiring methods.

7. To maintain IP66 protection between the BA488C and the mounting panel:

   Four panel mounting clips should be used

   Minimum panel thickness should be 2mm (0.08inches) Steel
   3mm (0.12inches) Aluminium

   Outside panel finish should be smooth, free from particle inclusions, runs or build-up around cut-out.

   Panel cut-out should be 66.2 x 136.0mm -0.0 +0.5
   (2.60 x 5.35 inches -0.00 +0.02)

   Edges of panel cut-out should be deburred and clean

   Each panel mounting clip should be tightened to between: 20 and 22cNm
   (1.77 to 1.95 inLb)

Iss.	Date	Modification	Ckd.	Appd.
1	01.03 2006	First release	.	.
2	01/08	CFM requirements added.		

BEKA associates Hitchin England

company confidential, copyright reserved.

Title: FM Approvals Control Drawing for Nonincendive BA484D & BA488C Serial Text Displays

Drawn	Checked	Scale
RC		NTS

Drawing No. CI480–08
Sheet 4

File: CI480–08s04.dwg 30.01.08

8. When installed in a hazardous (classified) location the BA484D Serial Text Display shall be fitted with cable glands / conduit hubs selected from the following table.

   Metallic glands and hubs must be grounded - see note 9.

Class	Permitted gland or conduit hub
Class I	Any metallic or plastic cable gland or conduit hub that provides the required environmental protection.
Class II and III	**Crouse - Hinds Myler hubs** SSTG-1 STG-1 STAG-1 MHUB-1 **O-Z / Gedrey hub** CHMG-50DT **REMKE hub** WH-1-G **Killark Glands** CMCXAA050 MCR050 MCX050

9. In addition to the supplied bonding plate, when 2 or 3 metallic glands or conduit hubs are fitted to a BA484D Fieldbus Display, all metallic glands or conduit hubs must be connected together and grounded.

10. **CAUTION:** The BA484D and BA488C Serial Text Display enclosures are manufactured from conductive plastic per Article 250 of the National Electrical Code the enclosures shall be grounded using the 'E' terminal on the terminal block.

11. Up to two BA484D and/or BA488C Serial Text Displays may be connected to one system.

12. Up to four BA484D and/or BA488C Serial Text Displays may be connected to one system.

Iss.	Date	Modification	Ckd.	Appd.
1	01.03 2006	First release	.	.
2	01/08	CFM requirements added.		

BEKA associates Hitchin England

company confidential, copyright reserved.

Title: FM Approvals Control Drawing for Nonincendive BA484D & BA488C Serial Text Displays

Drawn	Checked	Scale
RC		NTS

Drawing No. Sheet 5: CI480–08

File: CI480–08s05.dwg 30.01.08

APPENDIX 4
IECEx Certification

A4.0 The IECEx Certification Scheme
IECEx is a global certification scheme for explosion protected products which aims to harmonise international certification standards.
For additional information about the IECEx certification scheme and to view the BEKA associate certificates, please visit www.iecex.com

A4.1 IECEx Certificate of Conformity
For use in an explosive gas atmospheres
The BA484D Serial Text Display has been issued with an IECEx Certificate of Conformity number IECEx ITS 07.0020 which specifies the following certification codes and marking:

Ex ia IIC T5 Ga
Ta = -40ºC to 60ºC

Note: Operating temperature range of BA484D is –20ºC and +60ºC.

When connected to a certified IECEx system the BA484D may be installed in:

Zone 0 explosive gas air mixture continuously present.

Zone 1 explosive gas air mixture likely to occur in normal operation.

Zone 2 explosive gas air mixture not likely to occur, and if it does will only exist for a short time.

Be used with gases in groups:
Group A propane
Group B ethylene
Group C hydrogen

Having a temperature classification of:
T1 450°C
T2 300°C
T3 200°C
T4 135°C
T5 100°C

At an ambient temperature between –40 and +60°C.

A4.1.1 Installation
In an explosive gas atmosphere
For installations in gas atmospheres the BA484D IECEx, ATEX & UKEX certifications have identical intrinsic safety parameters and installation requirements. The ATEX & UKEX system design requirements described in section 5.1 of this manual may therefore be used for IECEx installations in gas atmospheres, but the local code of practice should also be consulted.

A4.2 IECEx Certificate of Conformity
Use in presence of combustible dusts
In addition to IECEx gas certification, the BA484D is available with optional IECEx certification permitting use in the presence of combustible dusts.

The IECEx Certificate of Conformity specifies the following certification codes which are identical to the ATEX dust certification codes:

Ex ia IIIC T80ºC Db
Ta = -40ºC to 60ºC

Note: Operating temperature range of BA484D is –20ºC and +60ºC.

If IECEx dust certification is required it must be requested when the BA484D Serial Text Display is purchased.

CAUTION
Before installing a BA484D Serial Text Display in the presence of a combustible dust, ensure that the certification information label, which is located on the top of the instrument, specifies dust certification - see below.

DUST LABEL MISSING

When connected to a certified IECEx system the BA484D may be installed in:

Zone 21 explosive atmosphere in the form of a cloud of combustible dust in air is likely to occur occasionally in normal operation.

Zone 22 explosive atmosphere in the form of a cloud of combustible dust in air is not likely to occur in normal operation, but if it does occur, will only persist for a short period.

Be used with dusts having a Minimum Ignition Temperature of:

Dust cloud	120°C
Dust layer on BA484D up to 5mm thick	155°C
Dust layer on BA484D over 5mm thick.	Refer to EN 60079 Part 14

At an ambient temperature between -40 and +60°C

The IECEx certificate may be downloaded from www.beka.co.uk, www.iecex.com or requested from the BEKA sales office.

A4.3 Versions of the BA484D

All versions of the BA484D Serial Text Display have IECEx certification. This includes:

ATEX& UKEX version for use in gas atmospheres.

IECEx code Ex ia IIC T5 Ga
Ta = -40°C to 60°C

ATEX & UKEX version for use in gas and dust atmospheres.

IECEx code Ex ia IIC T5 Ga
Ex ia IIIC T80ºC Db
Ta = -40°C to 60°C

Factory Mutual Approved version

IECEx code Ex ia IIC T5 Ga
Ta = -40°C to 60°C

APPENDIX 5

EU Declaration of Conformity

This certificate is issued for electrical apparatus BA484D

Description
BA484D is a field mounting, intrinsically safe, eight variable Serial Text Display

Manufactured by
BEKA associates Ltd, Old Charlton Road, Hitchin, Herts. UK. SG5 2DA

Council Directives this equipment complies with:

2014/34/EU (ATEX Directive)

Relating to equipment and protective systems intended for use in potentially explosive atmospheres.

Provisions of the Directive fulfilled by the equipment:

Group II Category 1G Ex ia IIC T5 Ga Ta –40ºC to +60ºC
Group II Category 2D Ex ia IIIC T80ºC Db Ta –40ºC to +60ºC IP66

Notified Body for EU-Type Examination and production
INTERTEK ITALIA SPA 2575 Via Guido Miglioli, 2/A 20063 Cernusco sul Naviglio (MI) Italy

EU-Type Examination Certificate
ITS02ATEX2035/2 Dated 23/01/2012.

Standards used:
IEC 60079-0:2011 and IEC 60079-11:2011
Compliant with EN IEC 60079-0:2018
and EN 60079-11:2012.

2014/30/EU (EMC Directive)

Standards used:
EN 61326-1:2021

2011/65/EU (RoHS Directive) relating to hazardous substances in electronic and electrical equipment.

2015/863/EU additional substances added by amending Annex II to Directive 2011/65/EU as regards the list of restricted substances.

CE **mark first affixed in 2002**

Authorised Signatory:



Olivier Lebreton CEng MIET
Managing Director

Issue 11	18th August 2021
Issue 12	19th Jan 2023
Issue 13	24th May 2023

BEKA associates Ltd. Old Charlton Road, Hitchin, SG5 2DA UK
Telephone +44 (0) 1462 438301 Fax +44 (0) 1462 453971
e-mail sales@beka.co.uk www.beka.co.uk