BA577E

One input timer or clock

General purpose

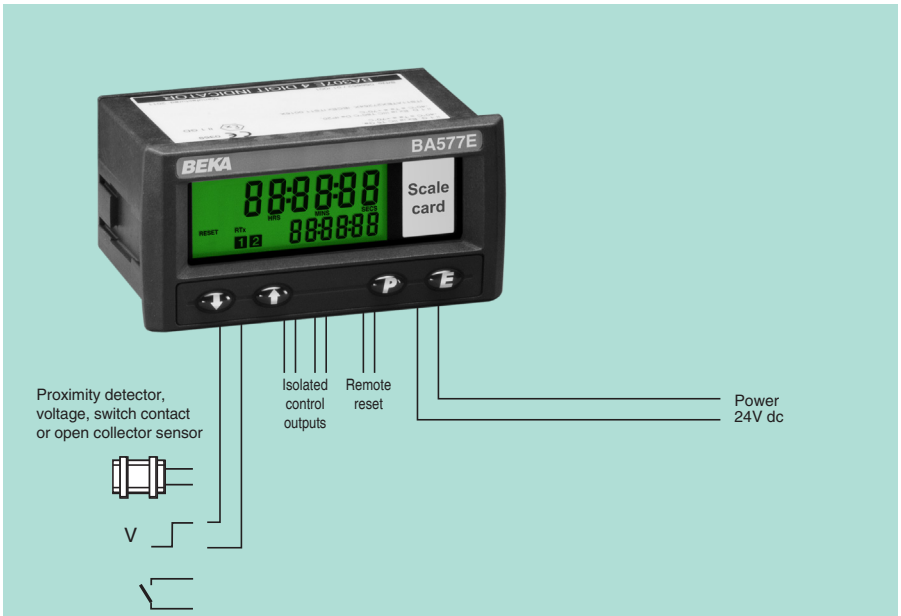

Shown with optional backlight

- **May be configured as a Timer or as a Clock.**
- **Configurable input: switch contact, proximity detector, open collector or voltage.**
- **Dual control outputs**
- **Two separate displays**
- **96 x 48mm DIN enclosure with IP66 front protection.**
- **Simple on-site scale card installation.**
- **Optional: Backlight**
- **3 year guarantee**

www.beka.co.uk/ba577e

The BA577E is a general purpose instrument with one input that may be configured as a Timer or as a Clock. As a Timer it is able to measure and display the elapsed time between external events, or control external events via two control outputs. When configured as a Clock the instrument can display time in a variety of formats. The BA577E is controlled by a single input which may be configured on-site to operate with a maintained input from a switch contact, proximity detector, open collector or a voltage output sensor.

Configuration may be performed on-site via the front panel push buttons using easy to use and well documented menus. The Timer employs a state and event structure to simplify configuration. The BA577E can be supplied configured to customers requirements including a customer defined printed slide-in scale card for no additional charge.

Applications as a Timer include displaying the time interval between two events detected by a process area sensor such as a 2-wire proximity detector connected to the single input. The dual control outputs can perform control functions such as repetitively opening a solenoid valve for a defined time. The Timer includes a powerful cycle function which can be configured to repeat a timing function up to 99 times or continuously, with up to 100 hours delay between timed periods.

As a Clock local time can be displayed in various twelve or twenty four hour formats and the display may be synchronised to a pre-set time via the external reset input. The control outputs may be configured to switch loads on or off at pre-set times twice during each twenty four hour period.

The display has high contrast and a wide viewing angle enabling the instrument to be read in most lighting conditions over a wide temperature range.

Display backlighting which is internally powered, is available as a factory fitted option. It provides green background illumination enhancing daylight viewing and allowing the display to be easily read at night or when installed in a poorly illuminated area.

IP66 front panel protection with a neoprene gasket to seal the joint between the instrument and the instrument panel, allows the BA577E to be installed in areas that will be washed down.

Control outputs can switch loads such as a sounder or solenoid valve. The two galvanically isolated, solid state voltage free outputs may be independently conditioned with normally open or closed outputs. Annunciators on the BA577E display show the status of both control outputs.

If a larger display or momentary action inputs are required the BA578E is a two input Timer or Clock housed in a Noryl 144 x 72mm DIN enclosure. For installations in marine or hostile environments the BA577E-SS is functionally identical to the BA577E but is housed in an impact resistant rugged stainless steel enclosure with a 10mm thick toughened glass window.

For applications in flammable atmospheres the BA377E, which is identical to the BA577E, has international intrinsic safety certification. For applications in Zone 2 or 22 the rugged stainless steel BA377NE has Ex nA and Ex tc certification allowing installation without Zener barriers or galvanic isolators.

BEKA associates

BEKA associates Ltd. Old Charlton Rd. Hitchin, Hertfordshire, SG5 2DA, U.K.
Tel. (01462) 438301 Fax (01462) 453971
e-mail sales@beka.co.uk www.beka.co.uk

SPECIFICATION

Power supply

Voltage	10 to 30V dc
Current	16mA max plus 22.5mA for optional backlight.

Input (Maintained)	**Lower**	**Upper** switching thresholds
Switch contact	100Ω	1kΩ
Proximity detector (NAMUR)	1.2mA	2.1mA
Open collector	2kΩ	10kΩ
Voltage (low)	1V	3V 30V max
Voltage (high)	3V	10V 30V max

Control outputs	Two outputs each of which may be independently configured as a NO or NC output.
Outputs	Isolated single pole, voltage free solid state switch.
Ron	5Ω + 0.7V max
Roff	IMΩ min
V max	30V dc
I max	200mA

Display

Type	Liquid crystal
Primary	9mm high
Secondary	6mm high
Format	hh:mm:ss ; hh:mm ; mm:ss or s

Remote Timer reset & Clock sync.	Contact closure with resistance less than 10kΩ

Timer

Maximum duration	99h 59m and 59s or equivalent in any display format.
Maximum delay between cycles.	99h 59m and 59s or equivalent in any display format.
Grand total run-time	5 x 10^6 hours maximum

Clock

Timekeeping accuracy	Less than ±0.43s error per day over operating temperature range.

Environmental

Operating temp	-40 to +70°C display -20 to +70°C
Storage temp	-40 to +85°C
Humidity	to 95% at 40°C non condensing
Vibration	Report available
Enclosure	
Material	Noryl SE1GFN3
Protection	Front IP66, rear IP20
EMC	Complies with EMC Directive 2014/30/EU

Mechanical

Terminals	Screw clamp for 0.5 to 1.5mm² cable, removable.
Weight	0.15kg

Accessories

Backlight	Green LED internally powered
Scale card	Blank card fitted to all instruments. Can be supplied printed with specified units of time for no additional charge at time of purchase. #
Tag legend	Specified tag number or application printed onto rear of instrument. #
BA495 rear cover and sealing kit	Provides impact and IP66 protection for rear of instrument. #

 # See accessory datasheet for details

DIMENSIONS (mm)

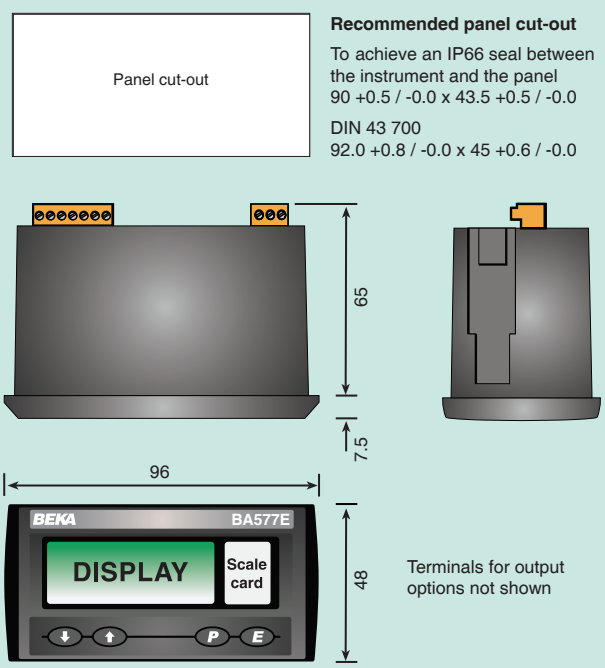

TERMINAL CONNECTIONS

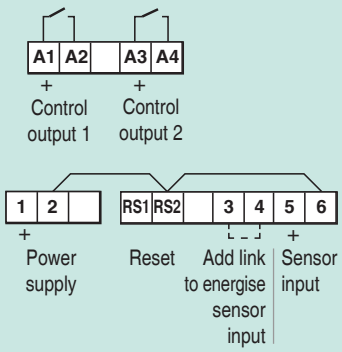

HOW TO ORDER

	Please specify
Model number	BA577E
Function	Timer or Clock
Input	Type *

Accessories	**Please specify if required**
Display backlight	Backlight
Scale card	Legend required *No charge if ordered with instrument*
Tag	Legend required
Rear cover and sealing kit	BA495

** BA577E can be supplied configured as required for no additional charge, see instruction manual, which can be downloaded from www.beka.co.uk/ba577e for details. If configuration information is not supplied, instrument will be configured as a Timer with an open collector input. Can easily be reconfigured on-site.*