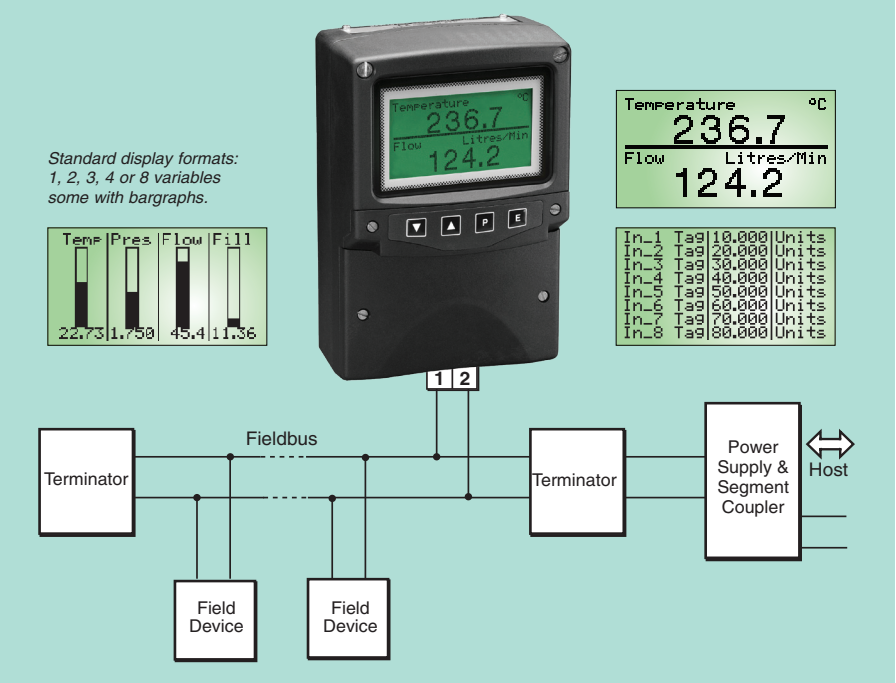

BA684DF-P

PROFIBUS PA Fieldbus display 8 variables

General purpose

- **PROFIBUS PA protocol.**
- **Compatible with most system hosts.**
- **High contrast display with backlight.**
- **Four operator push buttons & six optional local alarm outputs.**
- **IP66 field mounting GRP enclosure.**
- **3 year guarantee**

www.beka.co.uk/ba684df-p

The BA684DF-P Fieldbus Display is a general purpose instrument that can display up to eight fieldbus process variables. Eleven selectable standard screen formats contain one, two, three, four or eight variables, with units of measurement, tag descriptions and bargraphs on some screens.

Powered by the fieldbus the BA684DF-P only requires a 2-wire connection, no additional power supply is required. The high contrast 86 x 45mm liquid crystal display incorporates a green backlight enabling the display to be read in all lighting conditions from full sunlight to total darkness.

Simple commissioning results from the use of standard display formats. Apart from loading the BA684DF-P configuration files onto the system host and selecting the fieldbus variables to be displayed, no programming is required. Configuration of the BA684DF-P Fieldbus Display is performed via the fieldbus and the instrument front panel push buttons; simple menus enable the required standard display format to be selected and the units of measurement and tag information for each variable to be entered.

Six optional local alarm outputs may be linked to any of the displayed variables. Each isolated single pole solid state output may be conditioned as a combined high and low alarm, or as just a high or low alarm. Each output can switch any low power load such as a sounder, lamp or solenoid valve. Alarm configuration and the alarm set point adjustment is performed via the BA684DF-P front panel push buttons, as the local alarms are not accessible from the fieldbus system host.

BA684DF-P applications vary from a simple single variable display using a standard format, to providing an operator interface with a custom display and control inputs via external buttons.

The four push buttons on the front of the instrument may be used for returning operator acknowledgments or controls to the fieldbus host. If larger industrial switches are required for these operator controls, up to six external push buttons may be connected to the BA684DF-P. When the external switches are activated, the front panel push buttons may be disabled or operated in parallel with the external switches.

Comprehensive documentation includes a PROFIBUS Interface Guide.

For panel mounting applications see the BA688CF-P datasheet. This instrument has a similar electrical specification but is housed in a 144 x 72 panel mounting enclosure.

If flammable atmospheres are present the intrinsically safe BA484DF-P fieldbus display should be used.

For FOUNDATION™ fieldbus systems, please see the datasheet for the equivalent BA684DF-F fieldbus display.

BEKA associates

BEKA associates Ltd. Old Charlton Rd. Hitchin, Hertfordshire, SG5 2DA, U.K.
Tel. (01462) 438301 Fax (01462) 453971
e-mail sales@beka.co.uk www.beka.co.uk

SPECIFICATION

Display

Type	120 x 64 pixel liquid crystal
Size	86.5mm x 45mm
Backlight	Powered from fieldbus
Screens	
Standard format	1, 2, 3, 4 or 8 variables plus bargraph can include: units of measurement tag information

Controls

Front panel	Four push buttons scroll the indicator display between screens when the BA684DF-P is configured to display more variables than fit onto a single screen. Also used to configure optional local alarms and may be used to return operator inputs to the system host.
External switches	Control may be transferred to six external switches; front panel buttons may be inhibited or operated in parallel.
Switch cable	Length 5m max

Fieldbus communication

Voltage	9 to 32V
Current	25mA
Compliant with	IEC61158-2 31.25kbits/s Voltage Mode
Protocol	PROFIBUS PA
Function blocks	
PROFIBUS PA	8 x AO (Analogue Output) 6 x DI (Digital Input)

Environmental

Operating temp	-20 to 60°C
Storage temp	-40 to 85°C
Humidity	To 95% @ 40°C
Enclosure	IP66
EMC	In accordance with EU Directive 89/336/EEC
Immunity	BS EN 61326:1998 Operates normally with conducted 3Vrms interference between 0.15kHz and 80MHz, or radiated 10V/m interference between 80MHz and 1GHz.
Emissions	CISPR16-1/2 Class A

Mechanical

Terminals	Screw clamp for 0.5 to 1.5mm^2 cable.
Weight	1.6kg

Accessories

Alarms	Six galvanically isolated outputs which may be linked to displayed variables. Each alarm is configurable from instrument push buttons as: combined high and low alarm high or low alarm ***Note:*** *Alarms are not accessible from the fieldbus system host*
Contacts	Isolated single pole solid state Ron less than 5Ω + 0.7V Roff greater than 1MΩ Vmax = 30V dc Imax = 200mA
Tag strip	Printed legend behind the display window
Tag plate	Engraved stainless steel plate attached to the side of the instrument.
Pipe mounting kit	BA392D or BA393
Interface guide	May be downloaded from www.beka.co.uk

DIMENSIONS (mm)

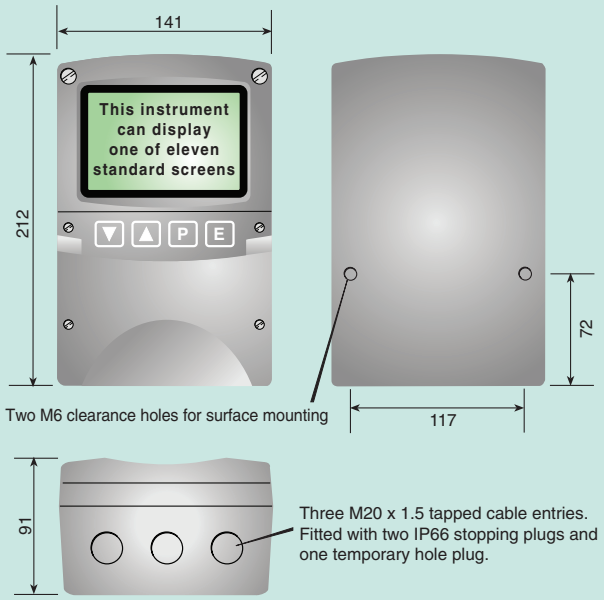

TERMINAL CONNECTIONS

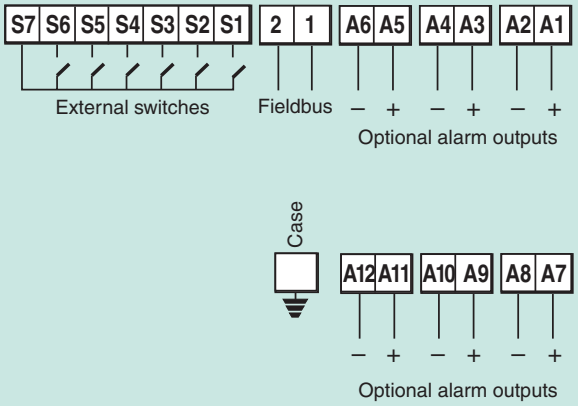

HOW TO ORDER

	Please specify
Model number	BA684DF-P

Accessories	**Please specify if required**
Six alarms	Alarms
Tag strip	Tag strip legend
Tag plate	Tag plate legend
Pipe mounting kit	BA392D or BA393