BA644DF-F
FOUNDATION™ fieldbus
Field mounting
8 variable
Fieldbus Indicator

Issue 6

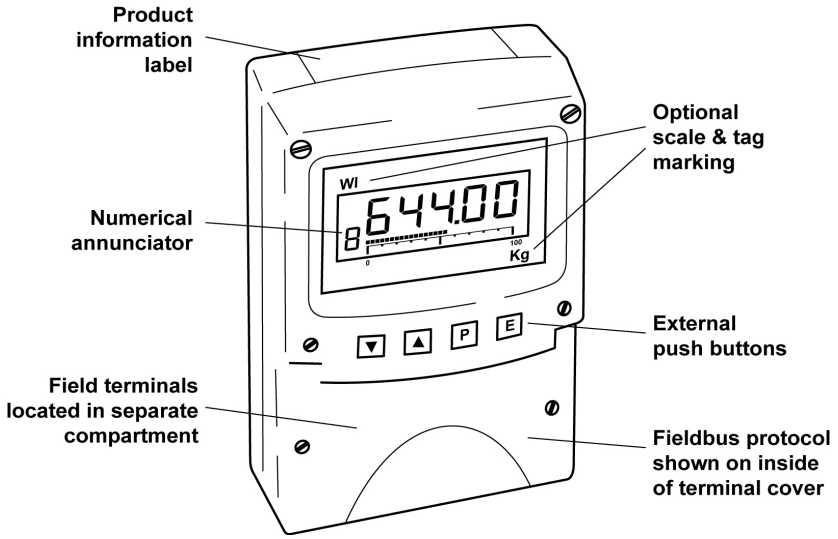

Issue: 6
30th January 2025

CONTENTS

1. Description

2. Operation
2.1 Error messages

3. System Design

4. Installation
4.1 Location
4.2 Installation procedure
4.3 EMC

5. Configuration
5.1 Configuration menus
5.2 Node configuration menu
5.2.1 Reset to node factory defaults
5.2.2 Change from node to listener
5.2.3 Access code for node configuration menu.
5.3 Listener configuration menu
5.3.1 Access
5.3.2 Summary of listener functions
5.3.3 Scan fieldbus segment
5.3.4 List configured input parameters.
5.3.5 Enter address & display parameters.
5.3.6 Enable selected input
5.3.7 Enter Device Address
5.3.8 Enter Variable Identity
5.3.9 Decimal point position
5.3.10 Configuration of bargraph
5.3.11 Scale numeric display
5.3.12 Access code for listener configuration menu.
5.3.13 Change from listener to node
5.3.14 Reset the indicator to listener factory defaults.

6. Maintenance
6.1 Fault finding during commissioning
6.2 Fault finding after commissioning
6.3 Servicing
6.4 Routine maintenance
6.5 Guarantee
6.6 Customer comments

7. Accessories
7.1 Scale and Tag marking
7.2 Tag plate
7.3 Pipe mounting kits

The BA644DF-F is CE marked to show compliance with the European EMC Directive 2014/30/EU. It is also UKCA marked to show compliance with UK Electromagnetic Compatibility Regulations UKSI 2016:1091 (as amended)

1. DESCRIPTION

The BA644DF-F fieldbus indicator FOUNDATION™ fieldbus instrument that may be configured as a fieldbus node or a fieldbus listener. It can display up to eight fieldbus process variables on a five digit LCD and a 31 segment analogue bargraph. The instrument is bus powered so no additional power supply is required.

As a fieldbus node the indicator is configured via the fieldbus host.

Communication Protocol	Fieldbus Function Blocks
FOUNDATION™ fieldbus	Input Selector (2 x IS) Digital input (6 x DI)

Device Description files may be downloaded from the Fieldbus Foundation or from the BEKA associates websites.

When configured as a fieldbus listener the BA644DF-F is not visible to the fieldbus host and can only be configured using the push buttons on the front of the instrument.

Housed in a robust IP66 glass reinforced polyester (GRP) enclosure with a toughened glass window, the BA644DF-F is surface mounting, or may be pipe mounted using one of the accessory kits.

The instrument's communication protocol is shown on a label inside the terminal cover. The '-F' order code suffix also indicates the protocol but is not shown on the instrument identification label. There is an alternative version of the fieldbus display, order code BA644DF-P for use on PROFIBUS PA networks.

2. OPERATION

The BA644DF-F indicator can display up to eight FOUNDATION™ fieldbus process variables designated in-1 to in-8. The operator can select which variable is displayed using the ▼and ▲ push buttons which scroll the display through the eight inputs. A numeric annunciator on the left hand side of the display shows which of the eight inputs is currently being displayed.

2.1 Error messages

When the BA644DF-F is configured as a listener the following error messages may be displayed:

'no ConF'	No inputs have been configured or are enabled.
'no dAtA'	No data is being received with the current configuration.

3. SYSTEM DESIGN

The BA644DF-F FOUNDATION™ fieldbus indicator is powered via the fieldbus which is connected to non-polarised terminals 1 and 2 as shown in Fig 1. The indicator may be connected to any FOUNDATION™ fieldbus segment that can supply an additional 13mA at between 9 and 32V.

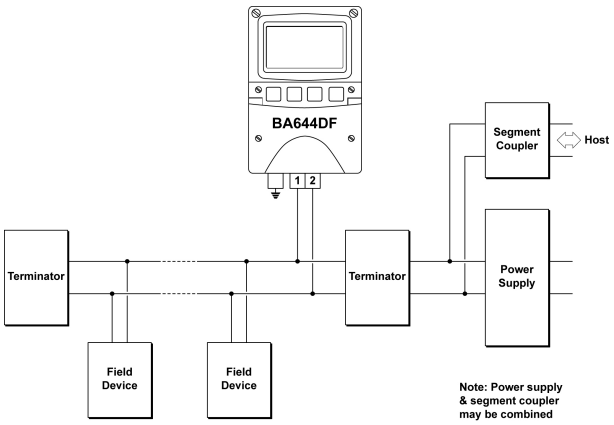

Fig 1 Typical FOUNDATION™ fieldbus segment

4. INSTALLATION

4.1 Location

The BA644DF-F FOUNDATION™ fieldbus indicator is housed in a robust IP66 glass reinforced polyester (GRP) enclosure incorporating an armoured glass window and stainless steel fittings. It is suitable for exterior mounting in most industrial environments, including offshore and wastewater treatment installations. Please consult BEKA associates if high vibration is anticipated.

The BA644DF-F enclosure is surface mounting. Accessory kits described in sections 7.3 of this manual enable the instrument to be mounted onto a vertical or horizontal pipe.

The field terminals and the two mounting holes are located in a separate compartment with a sealed cover allowing the instrument to be installed without exposing the display assembly.

The BA644DF-F earth terminal is connected to the carbon loaded GRP enclosure. If this enclosure is not bolted to a post or structure connected to the plant potential equalising network, the instrument's earth terminal should be connected to the potential equalising network.

The BA644DF-F enclosure is supplied with a bonding plate to ensure electrical continuity between the three conduit / cable entries.

4.2 Installation Procedure

Fig 2 illustrates the instrument installation procedure.

a. Remove the instrument terminal cover by unscrewing the two captive 'A' screws.

b. Mount the instrument on a flat surface and secure with two M6 screws through the 'B' holes. Alternatively use one of the mounting kits described in section 7.3

c. Remove the temporary hole plug and install a cable gland or conduit entry with required ingress protection. If more than one entry is required, replace one or both IP66 stopping plugs with a cable gland or conduit entry having the required ingress protection.

d. Connect the field wiring to the terminals as shown in Fig 3.

e. Replace the instrument terminal cover and evenly tighten the two 'A' screws.

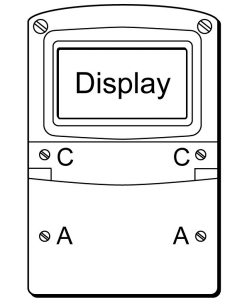

Step A
Remove the terminal cover by unscrewing the two 'A' screws

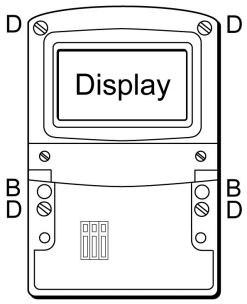

Step B
Secure the instrument to a flat surface with M6 screws through the two 'B' holes. Alternatively use a pipe mounting kit.

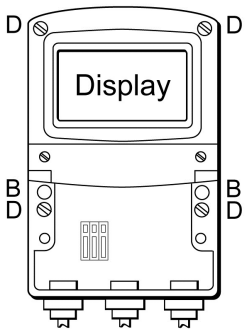

Step C and D
Remove the temporary hole plug and install an appropriate IP rated cable gland or conduit fitting. If more than one entry is required, one or both of the IP66 stopping plugs may be replaced with an appropriate IP rated gland or conduit fitting.

Fig 2 BA644DF-F installation procedure

4.3 EMC

The BA644DF-F complies with the requirements of the European EMC Directive 2014/30/EU and UK Electromagnetic Compatibility Regulations UKSI 2016:1091 (as amended). For specified immunity, all wiring should be in screened twisted pairs with the screens earthed at one point.

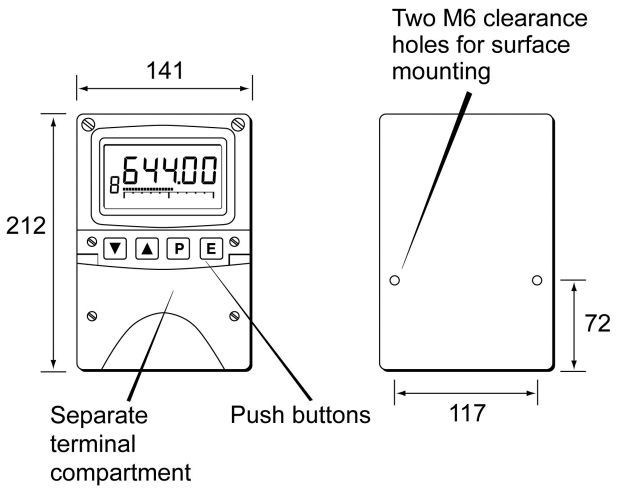

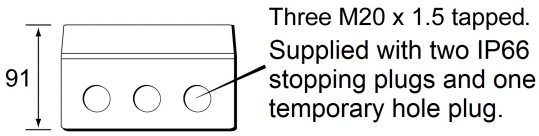

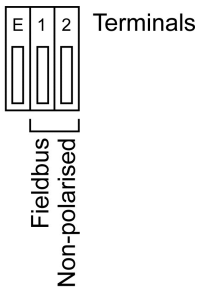

Fig 3 Dimensions and terminal connections

5. CONFIGURATION

The BA644DF-F 8 variable FOUNDATION™ fieldbus indicator may be configured as a fieldbus node or as a fieldbus listener. When used as a fieldbus node the indicator is configured via the fieldbus host. For detailed node conditioning information please refer to the BEKA FOUNDATION™ fieldbus Interface Guide which may be downloaded from www.beka.co.uk

As a fieldbus listener the BA644DF-F is not visible to the fieldbus host and can only be configured via the front panel push buttons using the menu shown in Fig 6.

Throughout this manual the four BA644DF-F push buttons are identified ***P*** ***E*** ▼ ▲ and legends displayed by the fieldbus indicator are shown within inverted commas e.g. 'CodE' and 'LiSt'.

5.1 Configuration menus

The configuration menu is separated into two sections, fieldbus node and fieldbus listener. Both contain the 'tYPE' function that enables transfer between the two. Unless otherwise requested when ordered, all FOUNDATION™ fieldbus BA644DF-F indicators are supplied as fieldbus nodes but can easily be reconfigured on-site.

5.2 Node configuration menu

The node configuration menu is shown in Fig 4. Access to the menu is obtained by operating the ***P*** and ***E*** buttons simultaneously. If the BA644DF-F is not protected by an access code the first parameter 'rESEt' will be displayed*. If the instrument is protected by an access code, 'CodE' will be displayed first. Pressing ***P*** will allow the four digit security code to be entered digit by digit using the ▼ or ▲ button to adjust the flashing digit and ***P*** to move control to the next digit. When the correct code has been entered, pressing ***E*** will cause the first parameter 'rESEt' to be displayed*. If an incorrect code is entered, or no button is pressed for ten seconds, the BA644DF-F will automatically return to the display mode.

***** If the indicator displays 'SCAn' it is conditioned as a fieldbus listener, see section 5.3.13 to change it to a fieldbus node.

5.2.1 Reset the indicator to node factory defaults 'rESEt'

The BA644DF-F may be reset to the factory defaults that are shown below:

Security Code	0000 (disabled)
Device address	Unconfigured
Last variable	8

For each of the eight inputs:

Decimal point	XXX.XX
Bar Type	Left
Bar lower limit	0.0
Bar Upper limit	100.0
Gain	1.0
Offset	0.0

To reset the BA644DF-F select 'rESEt' in the configuration menu by operating the ▼ or ▲ button. To enter the function press ***P*** which will reveal '0000' with the left hand digit flashing. To prevent accidental use of this function, '5urE' must be entered to confirm that the instrument is to be reset.

Using the ▼ or ▲ button set the flashing digit to '5' and press the ***P*** button to move control to the next digit which should be set to 'u'. When the four letters of '5urE' have been entered operating the ***E*** button will reset the BA644DF-F to the factory defaults.

CAUTION

All the instrument's node configuration and links will be lost when it is reset.

5.2.2 Change from node to listener 'tYPE'

This function enables the instrument to be changed from a fieldbus node to a fieldbus listener. Select 'tYPE' in the node configuration menu using the ▼ or ▲ button. To enter the function press ***P*** which will show that the instrument is configured as a fieldbus node, to change to a fieldbus listener press the ▼ or ▲ button which will toggle the display to 'LStnr' To prevent accidental changes this request must be confirmed by operating the ***P*** button and entering '5urE'. The instrument will display '0000' with the first digit flashing, using the ▼ or ▲ button set the flashing digit to '5' and press the ***P*** button to move control to the next digit which should be set to 'u'. When the four letters of '5urE' have been entered, operating the ***E*** button will cause the instrument to restart as a fieldbus listener in the display mode.

CAUTION

All the instrument's node configuration and links will be lost when it is changed from a fieldbus node to a fieldbus listener.

5.2.3 Access code for node configuration menu 'CodE'

Access to the node configuration menu may be protected by a four digit security code which must be entered to gain access. New instruments are supplied configured with the default code 0000 which disables this protection and allows unrestricted access to the configuration menu.

To enter a new access code select 'CodE' in the configuration menu by operating the ▼ or ▲ button. To enter the function press ***P*** which will reveal the current access code with one digit flashing. The code may be changed using the ▼ or ▲ button to adjust the flashing digit and the ***P*** button to move control to the next digit. When the required code has been selected, press ***E*** to enter the selection and return to the 'CodE' prompt in the configuration menu. The revised access code will be activated when the indicator is returned to the display mode.

If the access code is lost please contact BEKA associates.

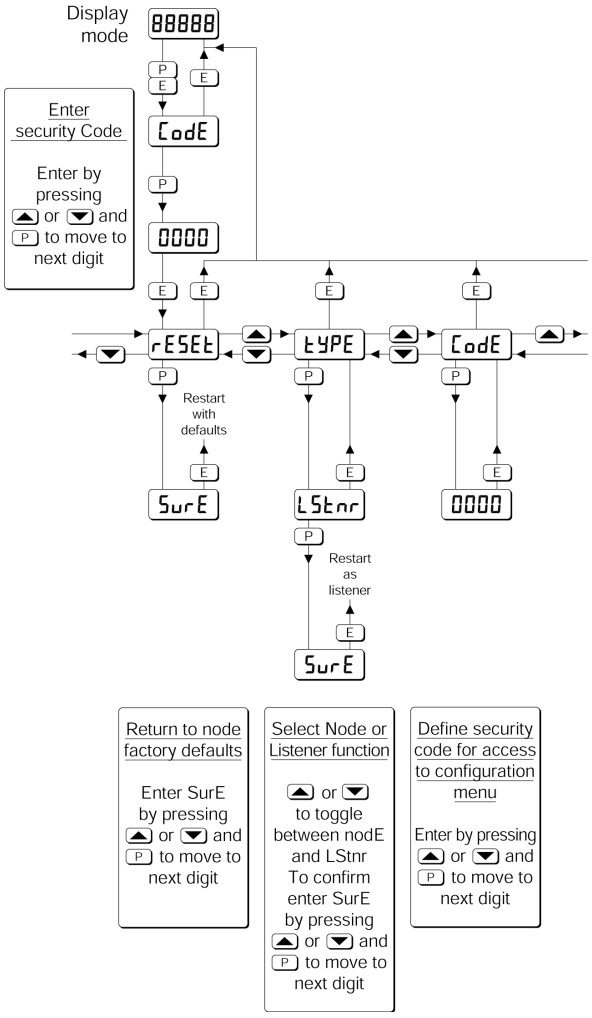

Fig 4 Node configuration menu

5.3 Listener configuration menu

The listener configuration menu is separated into three sections, 'SCAn', 'LISt' and 'Edit', plus three housekeeping functions 'CodE', 'tYPE' and 'rESEt' as shown in Fig 6.

'SCAn' is the simplest method of configuration if the fieldbus Device Address and Variable Identity of the data to be displayed by the BA644DF-F listener are not known.

In the 'SCAn' function pressing the ***P*** button causes the BA644DF-F indicator to search the fieldbus segment to which it is connected for all publishers. Fig 5 shows how the indicator displays the hexadecimal Device Address and Variable Identity associated with each publisher.

A **Publisher** is a device that places it's output data onto the bus as part of a cyclical pre-determined data exchange schedule.

The **Device Address** is a unique address that identifies each fieldbus instrument connected to the bus.

The **Variable Identity** is the fieldbus device Data Link Connection End Point (DLCEP) which identifies each Function Block output (process variable) transmitted by a fieldbus device such as flow and temperature transmitted by a fieldbus flowmeter.

The ▼ and ▲ push buttons scroll the display through all the publishers on the segment showing the Device Address and Variable Identity for each one - see Fig 5. To aid identification, operating the ***P*** button will preview the value of the data at each selected address, if required it may then be allocated to one of the eight BA644DF-F listener inputs in-1, to in-8 by operating the ***P*** button again. If the format of the data at the selected Device Address and Variable Identity is not DS-65 (float + status) 'no dAt' will be displayed.

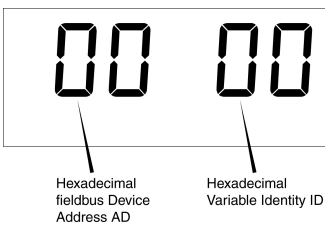

Fig 5 Device Address and Variable Identity

If the Device Address and Variable Identity of the process variable to be displayed by the BA644DF-F indixator are known, they may be directly entered via the edit sub-menu. This sub-menu also provides full control of both the numeric and bargraph display parameters.

5.3.1 Access

Access to the listener configuration menu is obtained by operating the ***P*** and ***E*** buttons simultaneously. If the BA644DF-F is not protected by an access code the first parameter 'SCAn' will be displayed.***** If the indicator is protected by an access code, 'CodE' will be displayed first. Pressing ***P*** will allow the four digit security code to be entered digit by digit using the ▼ or ▲ button to adjust the flashing digit and ***P*** to move control to the next digit. When the correct code has been entered, pressing ***E*** will cause the first parameter 'SCAn' to be displayed.***** If an incorrect code is entered, or no button is pressed for ten seconds, the indicator will automatically return to the display mode.

***** If the indicator displays 'rESEt' it is conditioned as a fieldbus node, see section 5.2.2 to change it to a fieldbus listener.

5.3.2 Summary of listener configuration functions.

This section contains a summary of all the listener configuration functions including a reference to more detailed information. It should be read in conjunction with Fig 6.

Indicator display	Summary of function
'SCAn'	**Scan fieldbus segment** Identifies all publishers on the fieldbus segment to which the listener is connected and enables selected data to be allocated to one of the eight listener inputs. See section 5.3.3
'LiSt'	**List configured input parameters** For each of the eight BA644DF-F listener input, in-1 to in-8 shows if the input is enabled and the allocated Device Address and Variable Identity. Parameters can not be changed from within this function. See section 5.3.4
'Edit'	**Enter addresses and display parameters** Contains six sub-functions that enable known fieldbus Device Address and Variable Identity to be entered and all display parameters adjusted for each of the eight fieldbus listener inputs. See section 5.3.5
'Enb'	**Enable listener input** Each of the eight listener inputs in-1 to in-8 may be enabled or disabled without affecting any parameters. See section 5.3.6
'Adr'	**Enter fieldbus Device Address** Allows hexadecimal fieldbus device address for each of the eight listener inputs in-1 to in-8 to be entered. See section 5.3.7
'id'	**Enter Variable Identity** Allows hexadecimal Variable Identity for each listener input in-1 to in-8 to be entered. See section 5.3.8
'dP'	**Decimal point position** Defines position of displayed decimal point for each listener input in-1 to in-8. See section 5.3.9
'bAr'	**Configuration of bargraph display.** Defines bargraph type, plus digital display at which bargraph is zero and full scale for each listener input in-1 to in-8. See section 5.3.10
'SCALE'	**Scale numeric display** Applies zero offset and scale factor to the numeric display for each listener input in-1 to in-8. See section 5.3.11
'CodE'	**Access code for listener configuration menu** Enters a four digit security access code for configuration menu. Default code 0000 disables this function. See section 5.3.12
'tYPE'	**Change from listener to node** Changes the function of the fieldbus indicator from a listener to a node. See section 5.3.13
'rESEt'	**Reset** Returns the BA644DF-F listener to factory defaults. See section 5.3.14

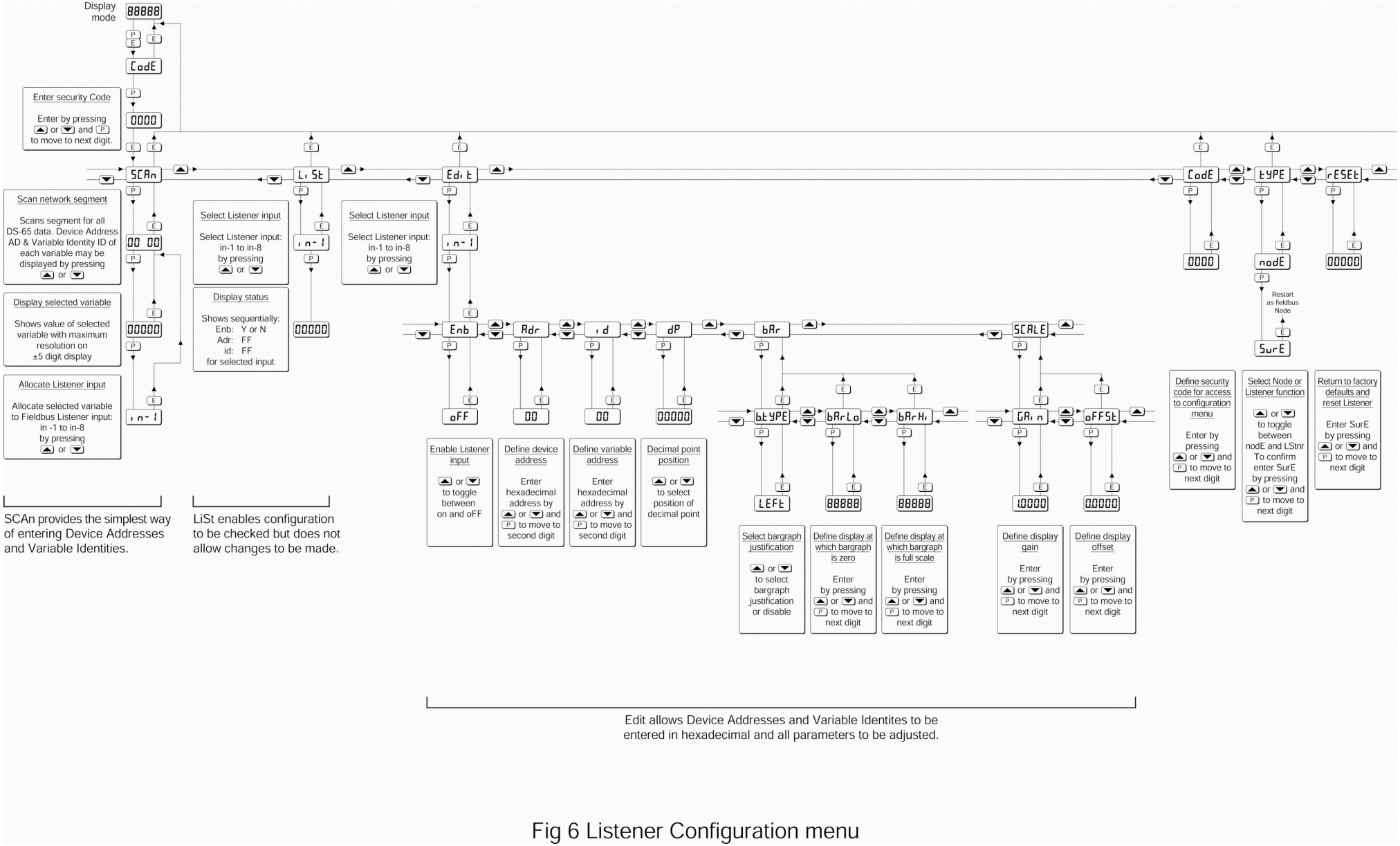

Fig 6 Listener Configuration menu

5.3.3 Scan fieldbus segment 'SCAn'

If the Device Address and Variable Identity of a process variable are not known, the 'SCAn' function provides a simple way to identify them. This function scans the fieldbus segment to which the BA644DF-F indicator is connected and identifies all the publishers. To aid identification it enables the value of each process variable to be pre-viewed and, if required, allocated to one of the eight BA644DF-F Fieldbus indicator inputs.

The BA644DF-F indicator only supports DS-65 formatted data (float + status) which is the usual format for analogue process variables. The 'SCAn' function will identify all publishers on the segment irrespective of format, but when pre-viewed, non DS-65 formatted data will produce a 'no dAt' error message.

'SCAn' is the first function displayed when entering the listener configuration menu, or it may be selected from within the menu by operating the ▼ or ▲ button. To scan the fieldbus segment to which the indicator is connected for all published data press ***P*** which will reveal the hexadecimal Device Address and Variable Identity of the first publisher found as shown in Fig 5. If there is more than one publisher operating the ▼ or ▲ button will scroll though all of them.

If no cyclic data is being published on the fieldbus segment the BA644DF-F indicator will display 'noPub'.

When the Device Address and Variable Identity of a process variable is being displayed, pressing ***P*** will preview the value of the process variable displayed with maximum resolution on the five digit display. If this confirms that it is one of the process variables to be displayed, it may be allocated to one of the eight BA644DF-F listener inputs in-1 to in-8.

To select the required indicator input press ***P*** to display the first input in-1, operating the ▼ or ▲ button will scroll the display through the other inputs. When the required input is displayed pressing ***E*** will allocate the selected process variable to the selected input and return the display to the Device Address and Variable Identity from which another process variable may be selected.

When a process variable is allocated to a indicator input any previous allocation will be overwritten.

5.3.4 List configured input parameters 'LiSt'

The 'LiSt' function enables the Device Address and Variable Identity allocated to each lindicator input to be viewed without danger of it being accidentally changed.

The 'LiSt' function may be selected from within the menu by operating ▼ or ▲ button. To enter the function press ***P*** which will display the indicator input currently selected in the display mode, other inputs may be selected using the ▼ or ▲ button. Operating the ***P*** button will cause the following parameters for the selected input to be displayed sequentially:

Display	Explanation
'Enb: Y or N'	Input Enabled yes or no
'Adr: 00'	Device Address
'id: 00'	Variable Identity

The display then automatically returns to the selected BA644DF-F indicator input from where another input may be selected.

If one of the eight BA644DF-F indicator's inputs in-1 to in-8 has not had a Device Address and Variable Identity allocated to it, 'LiSt' will show both as invalid address FF.

5.3.5 Enter address & display parameters 'Edit'

The 'Edit' function may be selected from within the menu by operating ▼ or ▲ button. To enter the function press ***P*** which will display the indicator input currently selected in the display mode, other listener inputs may be selected using the ▼ or ▲ button. When the required input has been selected operating the ***P*** button will enter the edit sub-menu at 'Enb' for the selected input.

5.3.6 Enable selected input 'Enb'

'Enb' turns the indicator input selected in the Edit function on or off without affecting the conditioning. To enter the function press ***P*** which will reveal whether the selected input is 'on' or 'oFF'. Operating the ▼ or ▲ buttons will toggle between the two conditions. When set as required operating the ***E*** button will enter the selection and return to the edit sub-menu.

5.3.7 Enter Device Address 'Adr'
This function allows a known fieldbus Device Address to be entered and allocated to the indicator input selected in the Edit function. To enter the function press ***P*** which will reveal the existing two digit hexadecimal address with one digit flashing which may be changed by operating the ▼ or ▲ button. When set as required operating the ***P*** button will transfer control to the second digit that may be adjusted in the same way. When both digits are set as required operating the ***E*** button will enter the selection and return to the 'Adr' prompt in the edit sub-menu.

5.3.8 Enter Variable Identity 'id'
Enables a known Variable Identity to be entered and allocated to the indicator input selected in the Edit function. To enter the function press ***P*** which will reveal the existing two digit hexadecimal address with one digit flashing which may be changed by operating the ▼ or ▲ button. When set as required operating the ***P*** button will transfer control to the second digit that may be adjusted in the same way. When both digits are set as required operating the ***E*** button will enter the selection and return to the 'id' prompt in the edit sub-menu.

5.3.9 Decimal point position 'dP'
Defines the position the decimal point in the numeric display. To enter the function press ***P*** which will reveal the existing decimal point position. Operating the ▼ or ▲ button will move the decimal point to the required position, omit it, or activate all the decimal points which automatically provides maximum resolution in the display mode irrespective of the numeric value.
When positioned as required, operating the ***E*** button will enter the selection and return to the 'dP' prompt in the edit sub-menu.

5.3.10 Configuration of bargraph display 'bAr'
This function contains three sub-functions that enable the bargraph, justify its position and define the relationship between the bargraph and the instrument's numeric display.

Sub-function 'b.tYPE' allows the bargraph to be left, centre or right justified, or to be turned off. Sub-functions 'bArLo' and 'bArhi' define the listener's numeric display at which the bargraph starts and is at full scale.

The 'bAr' function may be selected from within the edit sub-menu by operating the ▼ or ▲ button. To enter the function press ***P*** which will display the 'b.tYPE' sub-function, pressing ***P*** again will reveal the existing bargraph justification.

The ▼ or ▲ button will scroll through the four options, when the required justification is displayed, pressing ***E*** will enter the selection and return the display to the 'b.tYPE' prompt in the edit sub-menu from which 'bArLo' may be selected using the ▼ or ▲ button.

'bArLo' defines the indicator's numeric display at which the bargraph starts, to enter the function press ***P*** which will reveal the existing setting. The display may be changed using the ▼ or ▲ button to adjust the flashing digit and the ***P*** button to move control to the next digit. When the required starting display has been selected, press ***E*** to return to the 'bArLo' prompt in the edit sub-menu from which the 'bArHi' function may be selected.

'bArHi' defines the indicator's numeric display at which the bargraph is full scale, to enter the function press ***P*** which will reveal the existing setting. The display may be changed using the ▼ or ▲ button to adjust the flashing digit and the ***P*** button to move control to the next digit. When the required display has been selected, press ***E*** twice to enter the new values and return to the 'bAr' prompt in the edit sub-menu.

Note: If the 'dP' function has been set to provide automatic maximum resolution irrespective of the displayed value, it may be necessary to manually position the decimal point before adjusting 'bArLo' or 'bArHi'. This can be achieved by repeatedly operating the ***P*** button until the activated decimal point flashes, the decimal point can then be positioned using either the ▼ or ▲ button. Pressing the ***P*** button again will return control to one of the digits.

5.3.11 Scale numeric display 'SCALE'
A scaling factor 'Gain' and an offset 'oFFSt' may be applied to the fieldbus process variable using this function, thus allowing the indicator to display the fieldbus process variable in alternative units.

The 'SCALE' function may be selected from within the edit sub-menu by operating the ▼ or ▲ button. To enter the function press ***P*** which will display the 'GAin' sub-function, pressing ***P*** again will reveal the existing gain with one digit flashing. This flashing digit may be changed by operating the ▼ or ▲ button; when adjusted the ***P*** button will move control to the next digit or to the decimal point which can be positioned using the ▼ or ▲ button. When 'GAin' has been set to the required value operating the ***E*** button will enter the selection and return to the 'GAin' prompt in the sub-menu from where the 'oFFSt' function can be selected using the ▼ or ▲ button.

To enter the 'oFFSt' function press ***P*** which will reveal the existing offset with one digit flashing. Again the flashing digit may be changed by operating the ▼ or ▲ button and the ***P*** button will move control to the next digit or to the decimal point. When 'oFFSt' has been set to the required value operating the ***E*** button will enter the selection and return to the 'oFFSt' prompt in the sub-menu. Three operations of the ***E*** button will return to the 'Edit' function in the listener configuration menu.

5.3.12 Access code for listener configuration menu. 'CodE'

Access to the listener menu may be protected by a four digit security code which must be entered to gain access. New instruments are supplied configured with the default code 0000 which disables this protection and allows unrestricted access to the configuration menu.

To enter a new access code select 'CodE' in the listener configuration menu by operating the ▼ or ▲ button. To enter the function press ***P*** which will reveal the current access code with one digit flashing. The code may be changed using the ▼ or ▲ button to adjust the flashing digit and the ***P*** button to move control to the next digit. When the required code has been selected, press ***E*** to enter the selection and return to the 'CodE' prompt in the listener configuration menu. The revised access code will be activated when the indicator is returned to the display mode.

If the access code is lost please contact BEKA associates.

5.3.13 Change from listener to node 'tYPE'

This function enables the instrument to be changed from a fieldbus listener to a fieldbus node by selecting 'tYPE' in the listener configuration menu using the ▼ or ▲ button. To enter the function press ***P*** which will show that the instrument is configured as a fieldbus listener, to change to a fieldbus node press the ▼ or ▲ button which will toggle the display to 'nodE' To prevent accidental changes this request must be confirmed by operating the ***P*** button and entering '5urE'. The instrument will display '0000' with the first digit flashing, using the ▼ or ▲ button set the flashing digit to '5' and press the ***P*** button to move control to the next digit which should be set to 'u'. When the four letters of '5urE' have been entered, operating the ***E*** button will cause the instrument to restart as a fieldbus node in the display mode.

CAUTION

All the instrument's listener configuration will be lost when it is changed from a fieldbus listener to a fieldbus node.

5.3.14 Reset the indicator to listener factory defaults 'rESEt'

The BA644DF-F indicator may be reset to the listener factory defaults shown below:

Security Code	0000 (disabled)

For each of the eight inputs:

Input enable	Off
Decimal point	Auto (maximum resolution)
Bar Type	Left
Bar lower limit	0.0
Bar Upper limit	100.0
Gain	1.0
Offset	0.0

To reset the BA644DF-F indicator to the listener factory defaults select 'rESEt' in the listener configuration menu by operating the ▼ or ▲ button. To enter the function press ***P*** which will reveal '0000' with the left hand digit flashing. To prevent accidental use of this function, '5urE' must be entered to confirm that the instrument is to be reset.

Using the ▼ or ▲ button set the flashing digit to '5' and press the ***P*** button to move control to the next digit which should be set to 'u'. When the four letters of '5urE' have been entered operating the ***E*** button will reset the BA644DF-F to the factory defaults. Any existing configuration and addresses will be lost when the indicator is reset.

6. MAINTENANCE

6.1 Fault finding during commissioning

If a BA644DF-F fails to function during commissioning the following procedure should be followed:

Symptom	Cause	Check:
No Display	Instrument not correctly connected or powered.	9 to 32V between terminals 1 & 2.
When configured as a listener displays 'no ConF'	No inputs are enabled.	Configuration of each input.
When configured as a listener displays 'no dAtA'	No data being received with the current configuration.	Addresses and Index are correct. That data has DS-33 format.
Display shows a static value of 99999 or -99999	Value over-range / under-range	Configuration. and decimal point position.
Display stays static with the word bad.	Status of fieldbus variable has a quality of 'bad' or a fault state is active	Fieldbus configuration.
Bargraph scale stays OFF	Bargraph over-range / under-range	Bargraph configuration.
All display segments activated.	Display is initialising.	This is normal operation, after a few seconds the model number followed by the firmware version will be displayed prior to entering the display mode.

6.2 Fault finding after commissioning

ENSURE PLANT SAFETY BEFORE STARTING MAINTENANCE

If a BA644DF-F fails after it has been functioning correctly, the table shown in section 6.1 may help to identify the cause of the failure.

If this procedure does not reveal the cause of the fault, it is recommended that the instrument is replaced.

6.3 Servicing

We recommend that faulty BA644DF-F FOUNDATION™ fieldbus indicators are returned to BEKA associates or to our local agent for repair.

6.4 Routine maintenance

The mechanical and electrical condition of the instrument should be regularly checked. Initially annual inspections are recommended, but the inspection frequency should be adjusted to suit the environmental conditions.

6.5 Guarantee

Instruments which fail within the guarantee period should be returned to BEKA associates or our local agent. It is helpful if a brief description of the fault symptoms is provided.

6.6 Customer comments

BEKA associates is always pleased to receive comments from customers about our products and services. All communications are acknowledged and whenever possible, suggestions are implemented.

7. ACCESSORIES

7.1 Scale and tag marking

BA644DF-F indicators are fitted with a blank escutcheon around the liquid crystal display. If specified when the instrument is ordered, this can be supplied printed with units of measurement and tag information, plus a scale for the horizontal bargraph. Alternatively, information may be added on-site via an embossed strip, dry transfer or a permanent marker.

If separate units of measurement or identification are required for each process variable this can be provided on the tag plate see 7.2

To gain access to the display escutcheon remove the terminal cover by unscrewing the two 'A' screws which will reveal two concealed 'D' screws. Unscrew all four 'D' screws and carefully lift off the front of the instrument. The location of these screws is shown in Fig 2.

After adding the required legends, or fitting a new pre-printed self-adhesive escutcheon, ensure that the gasket is correctly positioned before reassembling the instrument enclosure.

7.2 Tag plate

The BA644DF-F can be supplied with a blank or custom laser marked stainless steel plate secured by two screws to the front of the instrument enclosure. This plate can accommodate:

1 row of 9 alphanumeric characters 10mm high

or 1 row of 11 alphanumeric characters 7mm high

or 2 rows of 18 alphanumeric characters 5mm high.

or 8 cells each containing units of measurement or identification for one of the 8 inputs.

1 °C TANK 1	2 % FULL TANK 1	3 °C TANK 2	4 % FULL TANK 2
5 mbar TANK 1	6 RPM TANK 1	7 mbar TANK 2	8 RPM TANK 2

Fig 7 Typical 8 cell tag plate

7.3 Pipe mounting kits

Two pipe mounting kits are available for securing the BA644DF-F to a horizontal or vertical pipe.

BA392D Stainless steel bracket secured by two worm drive hose clips for 60 to 80mm outside diameter pipes.

BA393 Heavy-duty stainless steel bracket secured by a single 'V' bolt. Will clamp to any pipe with an outside diameter between 40 and 80mm.