Forces at the Sweezz

	STE-uni	STE-plus
Force: motor + gas spring (500/1000 / 1500 N)	3500 / 4000 /4500 N (=350/400/450 kg)	
aspect	4:3 / 16:10 / 16:9	
dist.	± 80 cm	
range	± 67 cm	
H1	160 - 175 cm	
H2	72 cm	
Weight touchscreen	max 130 kg (with BM-01 or column ZLG-03)	
H4 (H1=165 cm)	58 - 125 cm	
P1	at 85 kg	at 130 kg (max)
Pull (Situation A)	≤ 119 kg	≤ 182 kg
Pull (Sit. B, with column)	≤ 51 kg	≤ 78 kg
With column the pulling forces are far less. Moreover, there are no shear forces.		

In newer versions the motor (actuator) is mounted 'upside down'. This has no effect for the forces.

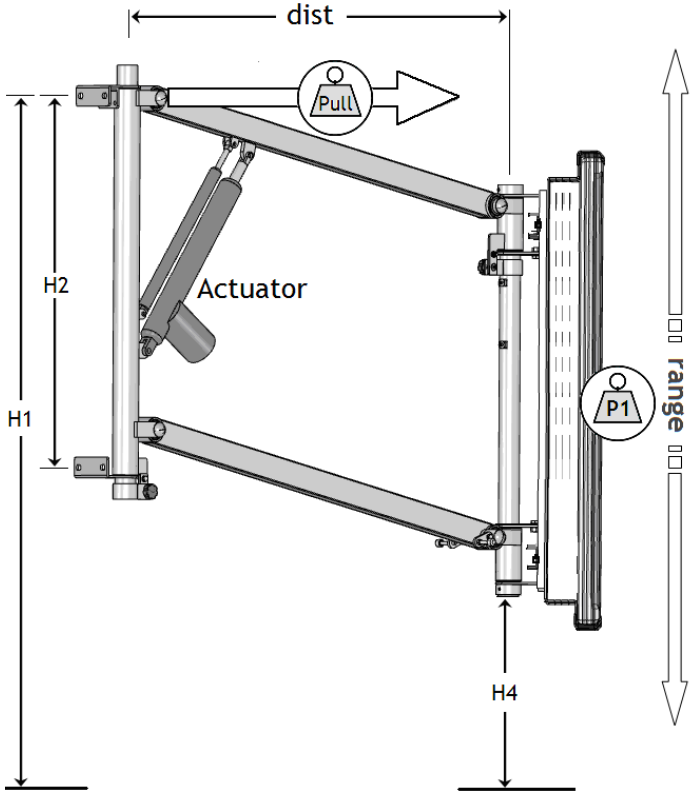

Sweezz for touchscreen ***(complete, incl. mounting materials)***.

STE-uni	Sweezz Electric for touchscreen (max. 70 to 75 kg) universal (VESA and non-VESA)	
STE-plus	Sweezz Electric for heavy touchscreen (> 70 kg) on a brick wall **with extra wall support BM-01** (not with a column)	
Support:	***Add the code or enter the screen weight (incl evt. soundbar):***	
code **-50**	- with gas spring 500N	Screen weight up to max. 60 kg
-100	- with gas spring 1000N	Screen weight of min. 55 kg up to max. 90 kg
-150	- with gas spring 1500N	Screen weight of min. 75 kg up to max. 130 kg
ZLG-03	Column for extra flat and quick mounting on a weak wall (plasterboard, metal stud, etc.)	