Built for a lifetime.

astrəea®

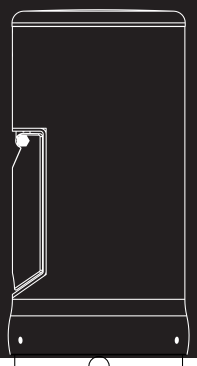

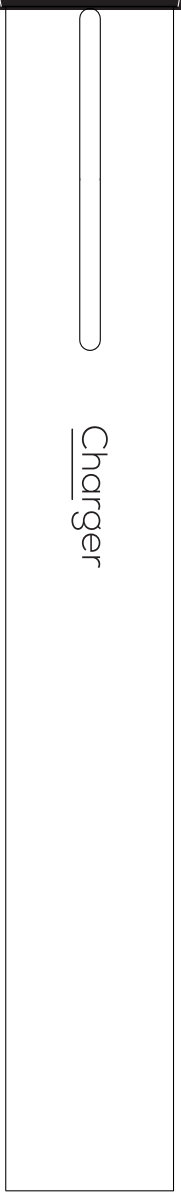

ENG

Installation Guide

EV SmartCharger – All Vertical Models

ACS1111, ACS1121, ACS211 and ACS221
(22KW) and subsets.

EV SmartCharger – All Horizontal Wallmount Models

ACS3111 and ACS3131 (22KW) and subsets.

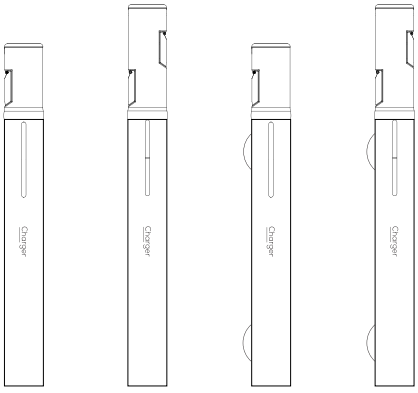



Download on the App Store

GET IT ON Google Play

Scan for:
Official Website

Before you start:

1. We recommend **qualified personnel** for this operation

2. Time needed: **up to 1 hour**

3. **Retain this Guide** for future reference

4. These **cards** that you will find in the Guide are very important. Please give them your **attention.**

Summary

Installation and operation of the Astreea SmartCharger

1. x Pre-installation requirements

2. x Technical data

3. x Assembly. Anchorage with foundation and metal frame.

4. x Wire connection

5. x Completion of installation

1. Requirements before installation

astreea

If any malfunctions or issues arise as a result of an incorrect installation, please initially reach out to the company responsible for the installation.

If the problem persists, don't hesitate to get in touch with Astreea® Support.

support@astreea.com

astreea.com/smartcharger

1.1 Safety instructions

Please review the safety guidelines provided below prior to utilizing the EV Charging Station to minimize the potential dangers of fire, electrical shocks, personal harm, or equipment damage. Only trained personnel should perform installations and adjustments. To mitigate the risk of electrical shock, refrain from conducting any maintenance unless you possess the necessary qualifications, as outlined in the operating instructions.

When working with electrical components, adhere to the local and national wiring standards and regulations, as well as the instructions provided here for installation. Connecting to the main power supply must align with the national regulations governing electrical installations.

This product has been meticulously designed and tested to comply with international standards. Utilize the equipment solely for its intended purpose and within the specified operating parameters.

1.2 Liability

Astreea® assumes no liability for the following cases in the event of personal injury or property damage:

- **Mishandling of the charging station**
- **Structural modifications to the charging station**
- **Deployment of unqualified technical personnel for installation**
- **Utilization of unauthorized spare parts or accessories**
- **Alterations to the configuration of the charge controller**
- **Inappropriate usage of the charging station**
- **Failure to adhere to the instructions provided in the manual**

1.3 Intended use

The charging station is designed exclusively for charging electric vehicles, such as electric cars, and should not be used to connect other devices like power tools.

This charging station is suitable for both indoor and outdoor use and must be installed vertically on a wall or a stable floor foundation with a flat surface, such as a brick or concrete wall. The installation and connection of the charging station must comply with the relevant national regulations.

The intended use of this device always includes compliance with the environmental conditions for which it was specifically developed.

The charging station has undergone development, manufacturing, testing, and documentation processes in accordance with the appropriate safety standards.

It's important to note that as long as the provided instructions and safety guidelines for the intended use are followed, the product is unlikely to pose any health risks to individuals or cause damage to property.

However, it is crucial to emphasize that failure to adhere to these safety instructions can result in severe risks, including the possibility of fatalities, injuries, and damage to the device.

It is of utmost importance to exercise extreme caution in adhering to the warnings outlined in this installation and operating manual. Below, we provide explanations for the significance of each individual symbol:

Danger! Electrical voltage hazard
Ignoring the instructions may result in damage to the charging station, serious injury or even death.

Attention! General safety hazard
Ignoring the instructions may result in damage to the charging station, serious injury or even death.

Advice/Note! Important information or procedure
Said instructions must be followed for the orderly operation of the charging station.

Installation Guide - Astreea® SmartCharger - All vertical models
astreea

1.4 Requirements and Observations

The following requirements and observations must be met and followed:

- **No direct spray of water on the surface of the charger.**
- **Have enough distance present from other technical equipment.**
- **No installation in areas with high risk of flooding.**
- **No installation in areas with any risk of explosion.**
- **Make sure the charging cable is not being strained during the charging operation or obstructed by any direct or indirect means.**
- **The mounting surface must be designed with sufficient strength in order to withstand the mechanical stress specified in the Guide (concrete is recommended).**
- **The ambient temperature must not be lower than -25 °C or higher than 50 °C.**
- **For installation of low-voltage systems, the specifications IEC 60364-1 and IEC 60364-5-52 must comply.**
- **Make sure the power supply assigned to the charger has sufficient capacity to uphold the electrical consumption of the charger.**
- **Ensure the electrical protection of the power supply assigned to the charger before, during and after the charging procedure.**
- **A stable and high-performing wireless internet connection is required for receiving software updates and the proper operation of the charger and mobile application.**
- **The housing of the charging system must always be kept closed.**
- **When the charging system is connected, you must not clean or wash the vehicle with a high-pressure cleaner because the plug-in connection is not sealed against direct pressurized water.**
- **Never install near fire sources, explosive materials, combustibles or other flammable sources.**
- **Never use it at places where gas or other chemical explosions could occur.**
- **It must be connected all the times to the ground, otherwise it will not allow charging.**
- **Turn off the EV Charging Station power before installing or performing operations to it.**
- **Make sure children are supervised if using the equipment.**
- **Do not put fingers or insert objects or sharp metallic objects into the terminals. Do not insert objects into any other parts of the EV Charging Station.**
- **Do not use the device if the power cord or EV cable is broken, shows any signs of damage or does not function properly.**
- **Do not use the Charging Station if it is broken, defective, cracked, damaged or does not function properly.**
- **Do not apply strong force on the equipment, to prevent crashes and deterioration.**
- **Do not use any sharp objects to damage the product.**
- **Do not service the equipment by yourself, do not open, disassemble or make any modifications to it.**
- **Do not touch any live electrical parts.**
- **Do not place the charging cables connected to the charging station in water.**
- **Make sure ground connection is properly done to prevent equipment damage.**
- **Transport the device with care in its original package to avoid damage to it and its components.**
- **As the Charging Station can affect the functioning of certain medical electronic implants, check any potential side effects with your electronic device manufacturer before using the device.**

The charging system is not suitable for charging vehicles with outgassing batteries (e.g. leadacid batteries).

The charging protocol respects the following IECs:

- **Charging in accordance with type 3 of IEC 61851-1**
- **Socket connectors in accordance with IEC 62196-2**

The charging system is solely designed for fixed installations and should only be operated and utilized by individuals who have thoroughly reviewed the operating manual.

Qualified electricians are required to have thoroughly studied and comprehended the equipment documentation and are expected to adhere to its instructions.

1.4.1 Protection Devices and Electrical Safety Requirements

The EV charging station utilizes internal electronic monitoring and switching capabilities to ensure safety, thereby minimizing the requirements for complex upstream protection devices. The installer is, however, strictly required to provide specific external protective devices as outlined below, in accordance with national installation regulations .

A. Internal Protection Mechanisms (Detection and Disconnection)

The Astreea charging station incorporates advanced safety components designed to fulfill the mandatory monitoring requirements for Mode 3 charging systems:

1. Residual Current Detection Module (RDC-DD/RCM): The charging station utilizes a highly sensitive Residual Current Sensor, , which functions as a Residual Direct Current Detecting Device (RDC-DD) fully compliant with IEC 62955:2018.

- **DC Fault Protection:** The internal system is equipped to detect smooth DC residual currents (IΔdc) equal to or above 6 mA. Detection at this level ensures that the mandatory upstream Type A RCD (DDR) is not impaired by DC fault currents stemming from the vehicle.

- **AC Fault Detection:** The internal system also provides built-in AC residual-current detection, designed to deactivate the charging system if the residual current exceeds 30 mA AC (typical trip threshold for the component is 17.5 mA).

2. Internal Switching and Safety: The internal relays (contactors), used for disconnecting the main current path, comply with IEC 62955 requirements. These relays incorporate additional safety features managed by the system control:

- Welded Contact Detection: The relays include an auxiliary contact specifically for the detection of welded contacts (DC Welding Detection), ensuring that the circuit is physically opened upon command.

- Load Discharge: Integrated discharge resistors manage the energy stored in the circuit upon relay de-energization.

B. Mandatory External Protection Requirements (Required by Installer)

The internal RCM module is a monitoring device (RDC-DD) and is not intended to provide protection against electric shock. Therefore, the electrical installation must provide external safety devices in the upstream distribution cabinet (e.g., the building's electrical cabinet).

For each connecting point of the charging station (e.g., one protection set per socket/circuit in dual chargers), the following characteristics are mandatory:

1. Residual Current Protection (RCD/DDR - Protection against electric shock):

- Type & Sensitivity: A separate Residual Current Device (RCD) or Residual Current Operated Circuit-Breaker with Overcurrent protection (RCBO) must be installed. This device must be of at least Type A and have a rated residual operating current (IΔn) not exceeding 30 mA AC. The RCD must disconnect all active conductors.

- Current Rating (In): The rated current of this device must be appropriate for the installation, typically 40 A for protection coordination on circuits intended to feed the charger [User Input].

2. Overcurrent and Short-Circuit Protection (Circuit Breaker - OCPD):

- Maximum Nominal Current: The external overcurrent protection device (Circuit Breaker) must not surpass a maximum nominal current of 32 A. For multi-socket chargers, this requirement applies individually to each output circuit (e.g., 2 x 32 A rated protection).

- Characteristic: The circuit breaker must allow for 8–10 times the nominal current (∗I∗nom) value.

- Standards: The device must comply with relevant circuit breaker standards (e.g., IEC 60898 series or IEC 60947-2 series).

3. Surge Protection: External Surge Protective Devices (SPDs) must be provided, chosen according to the installation requirements. The EV supply equipment requires protection according to a minimum overvoltage Category III if permanently connected.

1.4.2 Compliance Statement

This Charging Station supports the optional ventilation function as required by the IEC 61851-1 standard.

The Control Pilot (CP) signal from the Electric Vehicle (EV) is continuously monitored by the EV Supply Equipment (EVSE). If the EV requires charging area ventilation, the following condition applies:

If the EV transitions to State D (Ventilation Required), the EVSE's internal contactor will not be energized until the ventilation requirement is satisfied by the installation or the premises.

Installation Guide - Astreea® SmartCharger - All vertical models
astreea

Utilizing Ventilation with OCPP

While the initial detection of the ventilation requirement (State D2) is handled locally by the EVSE's firmware (via the CP signal), the management and control of the ventilation hardware can be linked to the Central Charging Station Management System (CSMS) using the Open Charge Point Protocol (OCPP).

1. **State Notification**: The EVSE is configured to communicate the local ventilation status or any related errors to the CSMS using the standard `StatusNotification` message, potentially leveraging a `VendorErrorCode` to specify a ventilation failure.

2. **Remote Control (Custom Command)**: For centralized control, the installer/operator may leverage the OCPP's `DataTransfer` message. This allows the CSMS to send a vendor-specific command to the EVSE to remotely activate or adjust the ventilation system in response to the detection of State D2.

Note for Installer: The installer must ensure that any external ventilation system required by the site is correctly interfaced with the Charging Station's control unit, especially if remote control via OCPP is desired. Consult the dedicated wiring diagram for the ventilation interface ports."

- If protective devices are included in the EV charging station, the manual shall indicate the characteristics of those protection devices explicitly describing the type and rating.
- If the protective devices are not in the EV charging station, the manual shall indicate all information necessary for the installation of external protection explicitly describing the type and rating of the devices to be used.

1.5 Qualification of electricians

The electrician entrusted with the installation should possess expertise in the following areas:

- **Up-to-date safety guidelines**
- **Safety instructions detailed in the manual**
- **Proficiency in both fundamental and advanced electrical and electronic skills**
- **Familiarity with safety procedures concerning electrical system operation**
- **Experience in the installation of three-phase electrical systems**
- **Knowledge of circuit breaker voltages and fundamental principles**

⚠ **When deciding on the placement of your Astreea® Charger, please keep in mind the importance of not obstructing entry or exit points and allowing for the passage of rescue or emergency vehicles.**

Additionally, make an effort to steer clear of locations where other individuals might stumble upon or accidentally collide with the station.

1.6 Pacemakers or ICDs

Guidance for Individuals with Pacemakers (PM) or Implantable Cardioverter Defibrillators (ICD):
Astreea® charging systems, when used as intended, comply with the European guideline on electromagnetic compatibility, specifically regarding radiated interference.

If individuals with pacemakers (PM) or implantable cardioverter defibrillators (ICD) wish to engage in activities involving chargingsystems and their associated devices as per their intended usage, Astreea® cannot provide any assessment regarding the suitability of these medical devices. Astreea® lacks the capability to evaluate the susceptibility of pacemakers or implantable cardioverter defibrillators to electromagnetic radiation. Only the manufacturers of these medical devices can provide such assessments.

As a precaution, Astreea® recommends that individuals in this category consult with the manufacturer of their pacemaker or defibrillator, as well as their relevant insurance company, before working on Astreea® charging systems.

This step is essential to ensure that no potential health or safety risks are involved in their use.

1.7 Installation and tests

Guidelines for Choosing Protective Equipment for Basic and Fault Protection Against Direct or Indirect Contact:

- **Electrical Circuit Breakers:** It is essential to safeguard the charging system using circuit breakers that adhere to the specific regulations established by the relevant national authorities.

The selection of these circuit breakers depends on factors such as the required tripping time, internal network resistance, conductor cross-sectional area, conductor lengths, and the preset rating of the charging system.

The short-circuit protection mechanism of the conductor should possess a characteristic that allows for 8-10 times the Inom value (nominal current) and must not surpass a maximum nominal current of 32 A, contingent upon the preset rating of the charging system.

- **Residual-Current Circuit Breaker (RCD):** To ensure personal safety, it is possible that national regulations require an upstream RCD with a sensitivity of 30 mA AC. Select an appropriate RCD that aligns with the national regulatory requirements.

- **AC Residual-Current Detection:** The charging system comesequipped with built-in AC residual-current detection as a convenient feature. This detection mechanism will deactivate the charging system, at the latest, when a residual current exceeding 30 mA AC is detected.

www.astreea.com/smartcharger |

1.7.1 Installation and Protection Requirements (Conformity to IEC 61851-1 and HD 60364-7-722)

The charging system is designed for Mode 3 conductive charging and must comply with the general requirements of IEC 61851-1 and the specific requirements for special installations regarding EV supplies, particularly SR HD 60364-7-722.

1.7.2 Overcurrent and Short-Circuit Protection (External Requirements)

The installer must ensure that the electrical installation feeding the EV supply equipment provides adequate protection against short-circuit and overcurrent, in accordance with national regulations and IEC 60364 series standards.

Over- current Protection (OCP): An external overcurrent protective device (e.g., Circuit Breakers compliant with IEC 60947-2 or IEC 60898 series) must be provided. The short-circuit protection mechanism must allow for 8–10 times the nominal current value and must not exceed a maximum nominal current of 32 A.

Individual Circuit Protection: Where the charging system (EVSE) provides multiple connection points (i.e., chargers with 2 sockets), these connections must have individual protection (against fault and overcurrent) incorporated in the EV supply equipment if they can be used simultaneously. If the EV charging station has more than one connection to the AC supply network, each connection requires individual protection.

1.7.3 Individual Residual Current Protection (Mandatory Internal/External)

To comply with the requirements for supplementary protection against electric shock for AC connection points, specifically 722.411.3.3 of SR HD 60364-7-722, the following measures are implemented for each connection point:

Mandate: Every AC connection point must be individually protected by a Residual Current Device (RCD) with a rated residual operating current not exceeding 30 mA.

DC Fault Protection: Since charging Mode 3 interfaces (IEC 62196 accessories) are utilized, protective measures against DC fault current must be taken. The required measures are the use of an RCD Type B, OR the use of an RCD Type A (or Type F) along with a Residual Direct Current Detecting Device (RDC-DD) that ensures disconnection of the supply if a DC fault current above 6 mA is detected.

1.7.4 Integrated RCD/RDC-DD Specifications

The Charger V4 is equipped with an integrated residual current detection sensor on each individual plug circuit to meet the DC fault protection requirement:

- **Integrated Device:** The charger includes a residual current detection sensor
- **DC Fault Detection:** The integrated device operates as an RDC-DD in accordance with IEC 62955:2018.
- It is designed to detect a smooth DC residual operating current in the range of 3 mA to 6 mA (4.5 mA nominal). This is the standard value of 0.006 A established to prevent the impairment of upstream Type A or F RCDs.
- **AC Fault Detection:** The sensor also detects AC residual current in the range of 15 mA to 20 mA (17.5 mA nominal).
- **Required External RCD:** Because the integrated device is a detection device (RDC-DD), it must be paired with an external RCD Type A (or RCBO, 30 mA) installed upstream in the fixed installation cabinet to provide the necessary overall protection (Type A RCDs comply with IEC 61008-1, IEC 61009-1, or IEC 62423)."
- The installation manual shall indicate if the optional function for ventilation is supported by the charging station. If the EV requests ventilation, the EV supply equipment shall only energize the system if such ventilation is provided by the installation or the premises.

Installation Guide - Astreea® SmartCharger - All vertical models

1.8 Information on initial inspections after installation and repeat inspections

National regulations may necessitate inspections of the charging system both before its initial startup and at regular intervals thereafter. These inspections should be conducted in strict accordance with the relevant rules and regulations.

Below, we provide guidance on how to carry out these inspections:

1. PE Conductor Test: After the installation and before the first activation, it is essential to assess the continuity of the PE (Protective Earth) conductor. To perform this test, connect the charging coupler to a test adapter designed for vehicle simulation as per EN 61581-1 guidelines. Measure the resistance of the PE conductor between the PE conductor socket of the adapter and the connection point of the PE conductor within the building's electrical cabinet.

The resistance of the PE conductor, for a total conductor length (including the connecting line to the charging system and the vehicle charging cable) of up to 5 meters, should not exceed 300 milliohms (mΩ).
For longer cables, you may need to adjust the value in accordance with applicable national regulations. In any case, the resistance must not exceed 1 ohm.

2. Insulation Test: Since the charging system incorporates a disconnecting relay, two insulation measurements are required. To conduct these tests, the charging system must be disconnected from the power supply. Therefore, before performing the measurement, ensure that the supply voltage is switched off using the circuit breaker located in the building's electrical cabinet.

Ensure that the power supply line feeding into and around the charger is disconnected during the foundation creation, installation, or repair process.

Neglecting to follow these safety instructions can pose a potentially lethal risk associated with electric voltage.

1.9 Working on the charging system without risk

Prior to connecting the charger to the vehicle, please adhere to the following precautions:

- Ensure that the connecting line of the charging system is fully unwound.
- Thoroughly inspect the charging system's housing, connecting line, charging coupler, cable, and connectors to confirm that they are free from any damage.
- When handling the plug-in connection of the charging system, hold onto the charging coupler rather than the charging cable.
- Take precautions to prevent anyone from potentially tripping over the charging cable. In the event of malfunctions or a failure of the charging system:
- Disconnect the charging system from the power supply by turning off the corresponding circuit breaker located within the building.
- Display a notice indicating the name of the authorized individual responsible for reactivating the circuit breaker.

1.10 Measurements and tests

Primary Side Insulation Measurement:
Conduct an insulation resistance measurement on the primary side of the charging system at the point where the power supply line connects to the charging system within the building's electrical cabinet. The recorded value should not surpass 1 megaohm (MΩ).

Secondary Side Insulation Measurement:
To perform this measurement, connect the charging coupler to a test adapter designed for vehicle simulation following the EN 61581-1 standards. Measure the insulation through the measuring sockets located on the test adapter. Ensure that the measured value does not exceed 1 megaohm (MΩ).

Alternatively, you can utilize the differential current method in conjunction with the measurement of the Protective Earth (PE) conductor current. In both scenarios, the recorded value must not exceed 3.5 milliamperes (mA).

To conduct these measurements, connect the charging coupler to a test adapter designed for vehicle simulation per the EN 61581-1 guidelines. Perform the measurements with the adapter set to the "C mode" and gauge the differential current at the point where the power supply line connects to the charging system within the building's electrical cabinet.

1.11 Testing

Testing Power-Off Condition in the Event of a Short-Circuit:
For these assessments, connect the charging coupler to a test adapter designed for vehicle simulation following EN 61581-1 standards. These measurements should be conducted with the adapter set in the "C mode."

Perform the measurements using the measuring sockets on the test adapter. Ensure that the recorded values align with those specified for the chosen circuit breaker.

- **Testing Power-Off Condition in Case of a Fault:**
  For these evaluations, link the charging coupler to a test adapter designed for vehicle simulation in accordance with EN 61581-1 guidelines. These measurements should also be carried out with the adapter in the "C mode."

  Conduct the measurements using appropriate instruments on the measuring sockets of the test adapter. The measured values must adhere to the requirements established for the selected circuit breaker.

- **Testing Integrated DC Residual-Current Detection:**
  To perform these tests, connect the charging coupler to a test adapter for vehicle simulation as per EN 61581-1 standards, ensuring that the adapter is in the "C mode."

Conduct the measurements using suitable instruments on the measuring sockets of the test adapter.

If the detected residual current exceeds 6 milliamperes (mA) DC, the charging system should disconnect the charging coupler from the power supply, and the system's fault indicator must be activated.

- **Testing Integrated AC Residual-Current Detection:**
  For these assessments, connect the charging coupler to a test adapter for vehicle simulation in line with EN 61581-1 standards.
  Perform the measurements with the adapter set in the "C mode." Conduct measurements using appropriate instruments on the
  measuring sockets of the test adapter.

If the observed residual current exceeds 30 milliamperes (mA) AC, the charging system should disconnect the charging coupler from the power supply, with a tripping time not exceeding 40 milliseconds. The system's fault indicator should also be activated. Note that if the upstream Residual Current Devices (RCDs) are properly dimensioned, they should not trip.

- **Testing Upstream RCD:**
  Due to the integrated AC residual-current detection, the upstream RCD should be tested at the connection point of the power supply line to the charging system within the building's electrical cabinet.

1.12 Operator control elements

LED Functionality:
The LED serves as an indicator for the charging system's operational status. For detailed information regarding these operational states, please refer to the operating manual.

Initiating the Charging Process:
The charging process will commence automatically once the charging coupler is plugged in and the vehicle requests a charging session.

Terminating the Charging Process:
To halt the charging process, follow one of the following methods:
1. Utilize the vehicle's operational control, as described in your vehicle's owner's manual.
2. Disconnect the charging station from the power source by switching off the corresponding circuit breaker in the building.
3. Employ the Astreea® Charger app to cease the charging session.

The charging process can be stopped by using the mobile application or the vehicle control system.

If the automatic magnetic lock fails, do NOT attempt to remove the cable during the charging process.

Individuals with pacemakers or defibrillators should refrain from engaging in any tasks or being in proximity to the charging systems and associated devices.

This includes activities such as maintenance operations or addressing any faults.

Installation Guide - Astreea® SmartCharger - All vertical models
astreea

1.13 The structure of your Astreea® Charger

Structure of Astreea® SmartCharger:

1. Body
2. Status LED light
3. Protective cover
4. Charging plug
5. Charging cable
6. Antenna and NFC controller
7. Power line connection*

*The power source can be linked either underground through the ground fixture or above ground by utilizing the rectangular opening.

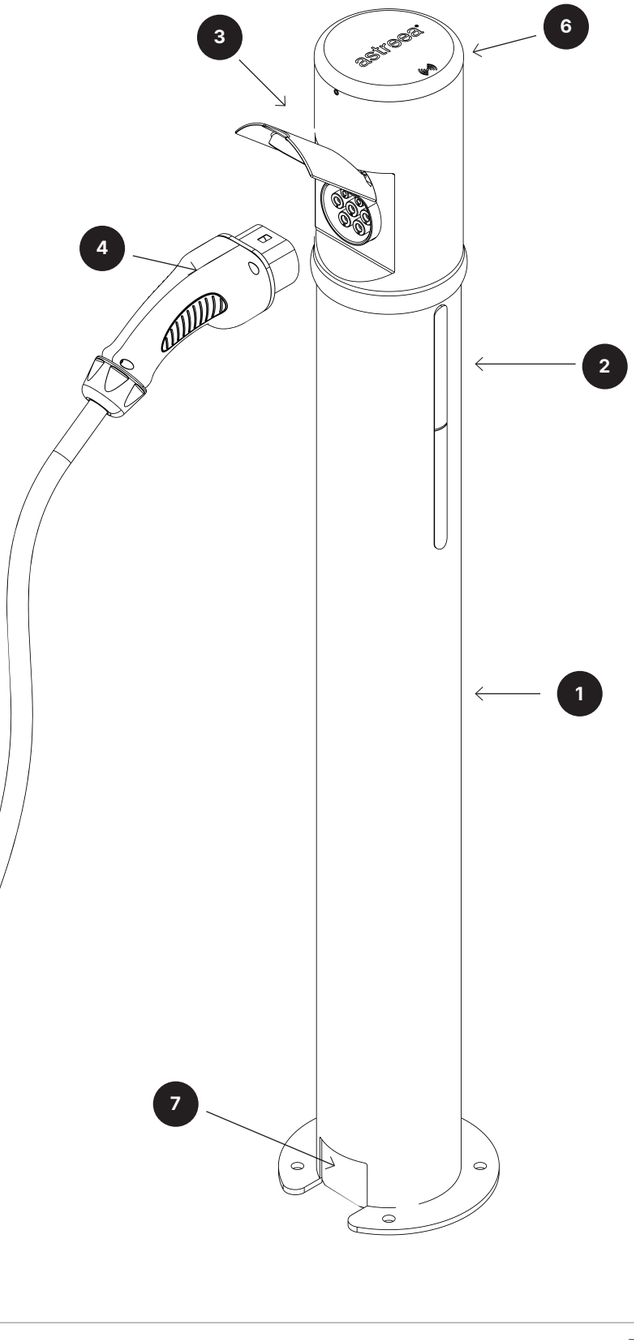

Discover our EV chargers

Self Standing 22 kW

Single Socket or Cable Charger

Model:	ACS1111, ACS1112, ACS1121, ACS1122 ACS1131, ACS1132 ACS1141, ACS1142
Max Output Power:	22 KW
Output Connection:	Type 2 Charging Socket
Cable available:	Yes (optional)
Display available:	Yes (optional)
Shutter available:	Yes (optional)
Mid Meter available:	Yes
Commercial use:	Based on user choice
Customizable:	Yes (optional)





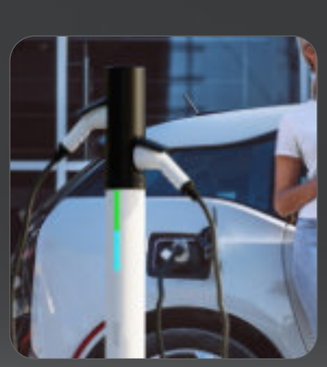



Self Standing 2 x 22 kW

Double Socket or Double Cable Charger

Model:	ACS1211, ACS1212, ACS1221, ACS1222, ACS1231, ACS1232, ACS1241, ACS1242
Max Output Power:	2x22 KW
Output Connection:	Type 2 Charging Socket
Cable available:	Yes (optional)
Display available:	Yes (optional)
Shutter available:	Yes (optional)
Mid Meter available:	Yes
Commercial use:	Based on user choice
Customizable:	Yes (optional)

Wallmount 22 kW

Single Socket or Cable Charger

Model:	ACS2111, ACS2112, ACS2121, ACS2122 ACS2131, ACS2132 ACS2141, ACS2142
Max Output Power:	22 KW
Output Connection:	Type 2 Charging Socket
Cable available:	Yes (optional)
Display available:	Yes (optional)
Shutter available:	Yes (optional)
Mid Meter available:	Yes
Commercial use:	Based on user choice
Customizable:	Yes (optional)





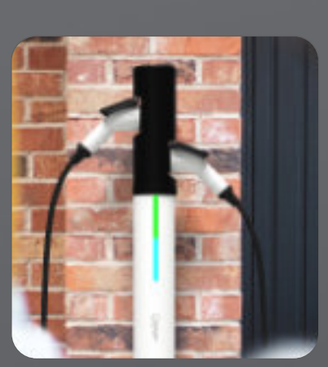



Wallmount 2 x 22 kW

Double Socket or Double Cable Charger

Model:	ACS2211, ACS2212, ACS2221, ACS2222 , ACS2231, ACS2232, ACS2241, ACS2242
Max Output Power:	2x22 KW
Output Connection:	Type 2 Charging Socket
Cable available:	Yes (optional)
Display available:	Yes (optional)
Shutter available:	Yes (optional)
Mid Meter available:	Yes
Commercial use:	Based on user choice
Customizable:	Yes (optional)

CE (NFC)

2. Technical Data

Vehicle Connection	Chargers with 1 socket	Chargers with 2 sockets
Type 2 charging socket	32A	**2 x** 32A
Maximum charging current	16 A / 32 A	**2 x** 32 A
Maximum charging power	22 kW	**2 x** 22 kW
Output voltage		230 / 400 V

Protections	
Required protections	External type ARCBO, ground fault including DC residual current protection, external surge protection
Protection Class	IP55
Mechanical Protection	IK10
Operating Temperature	-25C to 50C
Humidity	5% - 95% without condensation

Communication and protocols	
Interface	Astreea® Mobile Application iOS / Android, RGBW LED
Protocols	* Wi-Fi WiFi 2.4 GHz: frequency 2412 - 2472 MHz; output power <20 dBm; RFID: frequency 13.56 MHz, output power <42 dBµA/m at 10 m; Modbus TCP internal; NFC type A; OCCP 1.6; Ethernet/LAN,
Protocols	* Meter or MID Meter integration, Interactive, in-app Map, RFID & NFC phone authorization, charging history, Real-time Configurable Maximum Power, User management and privilege system, Solar Panel integration, Remote cloud support, Charging Scheduler, Smart Home compatibility, Web-based Analytics Platform

Installation Guide - Astreea® SmartCharger - All vertical models
astreea

Mandatory power connections	
Nominal voltage	230 / 400V
Nominal current	32 A
Circuit Breakers	20 A / 40 A, 3-poles
AC fault detection	RCCB, Type A, 30mA

*Some software features and systems may still be in the development phase at the time of purchase.

Horizontal Wallmount

ACS3111

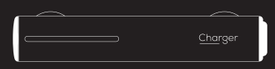

Self Standing

ACS1211

ACS1111

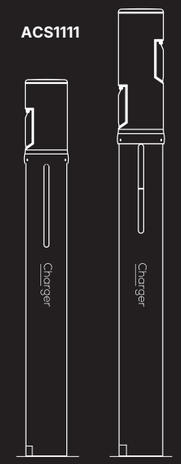

Wallmount

ACS2211

ACS2111

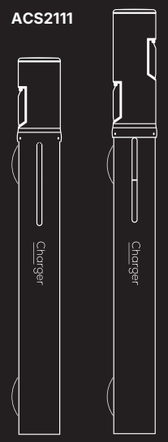

There are **34 different models** serving one purpose:
making e-charging the coolest thing there is.

Proudly manufactured by Astreea® in the European Union

2.1 Characteristics of power supply input

The Astreea charger is classified according to the supply network system that it is intended to be connected to:

- EV supply equipment connected to AC supply network (Voltage of 3 x 400V AC 3P+N+PE and a Nominal voltage of 230 / 400 V.)

Also, Astreea charger is classified according to the electric connection method:

- Permanently connected.

2.2 Characteristics of power supply output

Astreea chargeris classified according to the type of current the EV supply equipment delivers:

- AC EV supply equipment (the output is alternating current, consistent with the Output voltage of 230 / 400 V. The charger supports AC charging in accordance with type 3 of IEC 61851-1)

2.3 Special environmental conditions

Ambient temperature -30°C to 50°C. The Astreea charger is suitable for outdoor use, with the recommandation to not expose it to direct sunlight

2.4 Access

The Astreea Charger is an equipment for locations with non-restricted access. This designation include private and public areas.

2.5 Protection against electric shock

Astreea charger is classified according to the protection against electric shock as class I equipment. This classification implies reliance on the protective earthing conductor for safety. This is supported by the explicit safety requirement in the manual that the charger "must be connected all the times to the ground" and that the ground connection must be "properly done". The manual already lists the required external protection measures, including ground fault protection.

2.6 Charging modes

The Astreea Charger is classified as a Mode 3 charging system

2.7 Optional function:

Intentional and unintentional disconnection of the vehicle connector and/or the EV plug:

An electromechanical means is provided to prevent intentional and unintentional disconnection under load of the vehicle connector and/or plug according to IEC 62196-1.

The socket variant for the charger contains an electromagnetic locker with solenoid which prevent intentional and unintentional disconnection under load. This locker is automatically disconnected in case of power outage.

Installation Guide - Astreea® SmartCharger - All vertical models
astreea

2.8 National usage restrictions

National requirements exist which make the installation of shutters mandatory on EV charging accessories in specific countries, notably France and the UK, due to local wiring regulations or safety decrees.

- France (FR): In France, national regulations (Décret 2017-26 du 12 Janvier 2017) require that for every connection point connected to a building's supply point, the socket-outlet or vehicle connector, up to 32 A, must be provided with shutters. This regulation is designed to protect people who have ordinary access (BA1), disabled persons (BA2), and children (BA3).

- United Kingdom (UK): The UK is listed among the countries where socket-outlets are equipped with shutters in places where they are mandatory in residential and public locations. The presence of shutters on the live entry hole of the socket-outlets or connectors for Case C charging is recognized as a measure of protection in these contexts. Furthermore, EV connection points in the UK may include a socket-outlet compliant with BS 1363

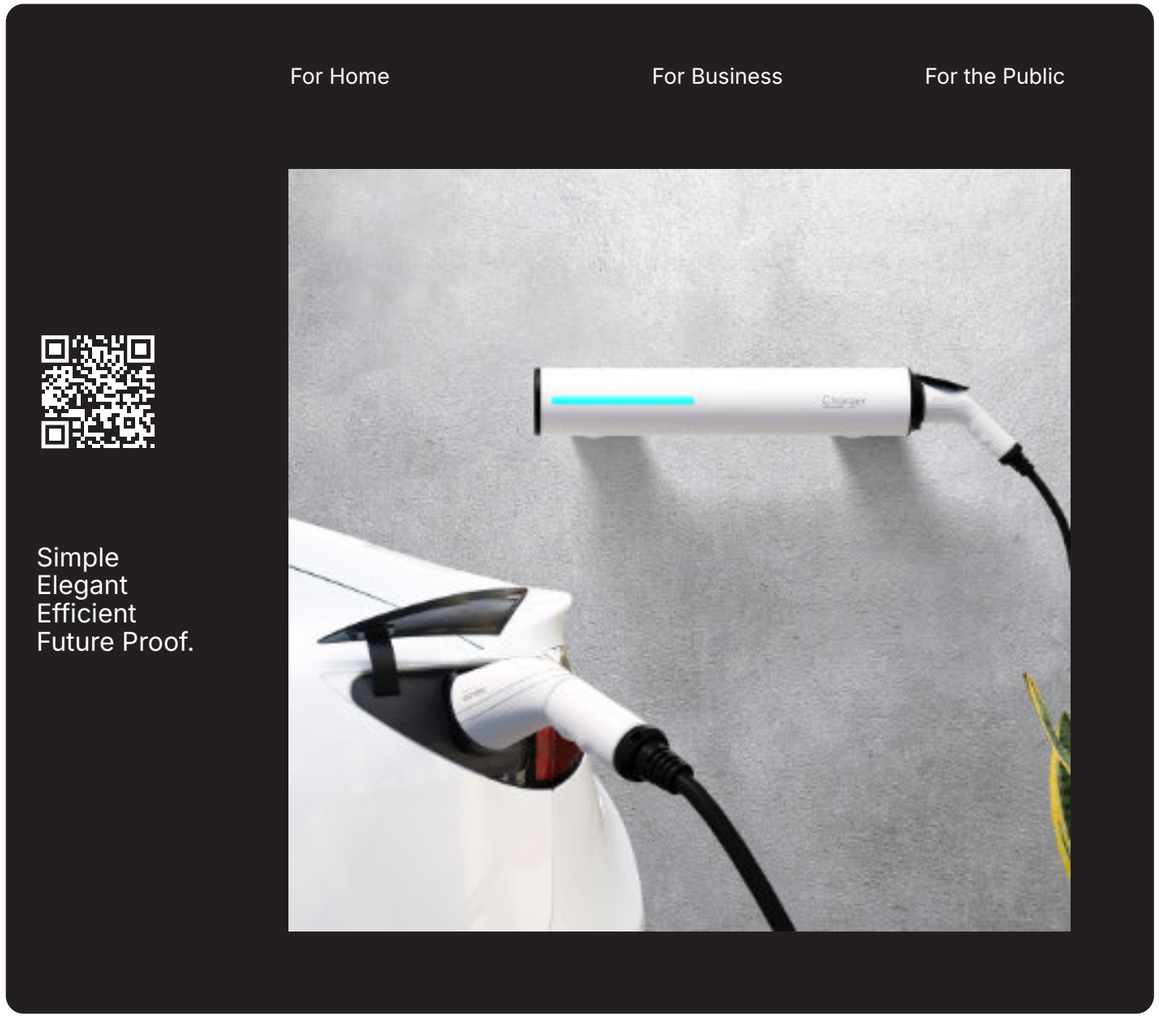

Proudly manufactured by Astreea® in the European Union

3. Assembly. Anchoring with foundation and metal frame.

3.1. Creating the foundation

To ensure the secure and stable installation of the Charger, Astreea® recommends utilizing the optional Stainless steel Foundation Frame, which is embedded in concrete. It is essential to prevent any cement from entering the threaded holes during this process.
Additionally, it's crucial to take precautions to avoid damaging or scratching the electrical cables and their protective coverings during installation. The use of pre-made bolting points simplifies the assembly of the charging column:

- If necessary, you can adjust the height as needed.
- Begin by excavating the ground and forming a shutter for the foundation area.
- Insert the Foundation Frame and thread an empty conduit through the designated opening.
- While aligning the base frame, pay attention to the front mark located on the mounting plate. This indicates which way the LEDs will be facing
- Guide the supply line through the empty conduit.
- Leave an ample length above the ground surface.
- Level the foundation frame to ensure that the foundation plate is flush with the ground.
- Verify that there are no exposed electrical wires visible after completing the installation.

Make certain that the selected foundation possesses the necessary structural strength to endure the forces exerted during the installation procedure.

Concrete is recommended.

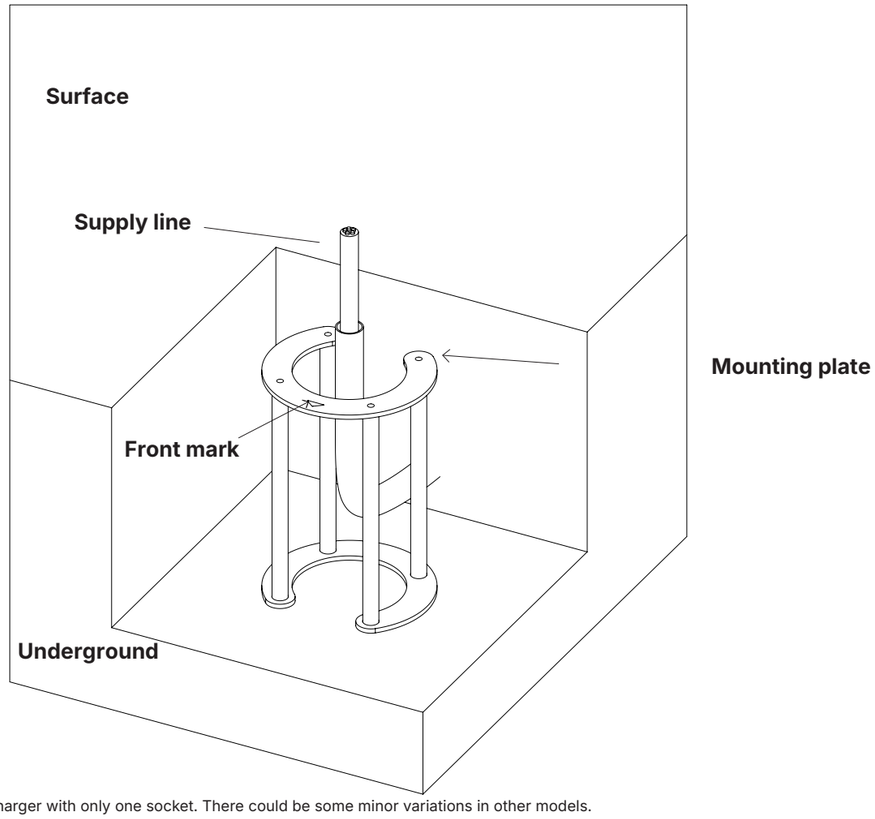

The illustrations portray a charger with only one socket. There could be some minor variations in other models.

3.2. Mount the sleeve on the lower cap

Once the foundation has solidified, follow these steps:

1. Detach the Lower Cap from the interior of the charger by pulling down.
2. Attach the Sealing Sleeve to the Lower Cap in the designated position.
3. Place the Lower Cap onto the Foundation Frame, following the visual references provided in the images below.

Ensure the sleeve is securely positioned on the socket, free from any creases or debris. Properly tighten the Cable Gland to prevent water condensation.

The Front Mark indicates the position the charger will be facing after the installation. Make sure that the front mark is facing your desired mounting position before placing it into the cement.

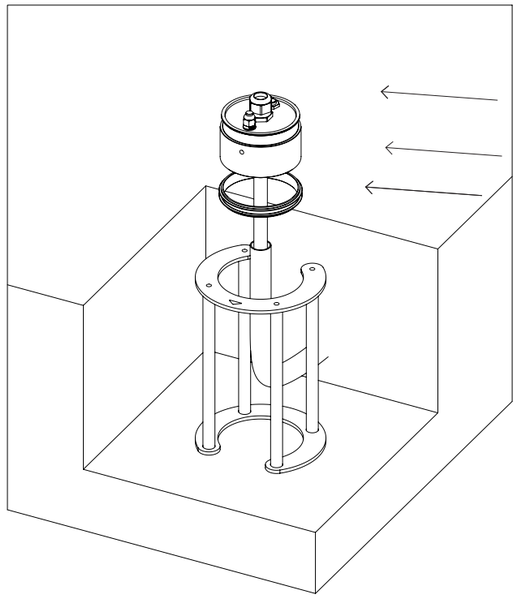

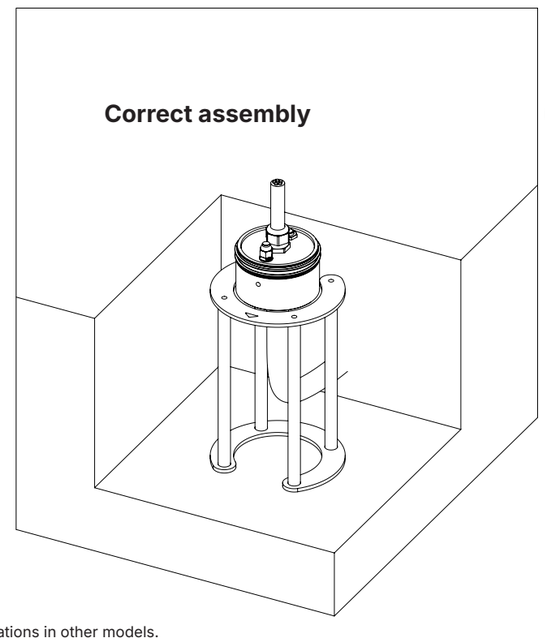

The illustrations portray a charger with only one socket. There could be some minor variations in other models.

4. Link the wires

4.1 Feed the supply cables through the cable gland

Pull the cables through the cable gland, adjust the length of the wires and strip off the jacket making sure to leave out at least 10 mm at the top.

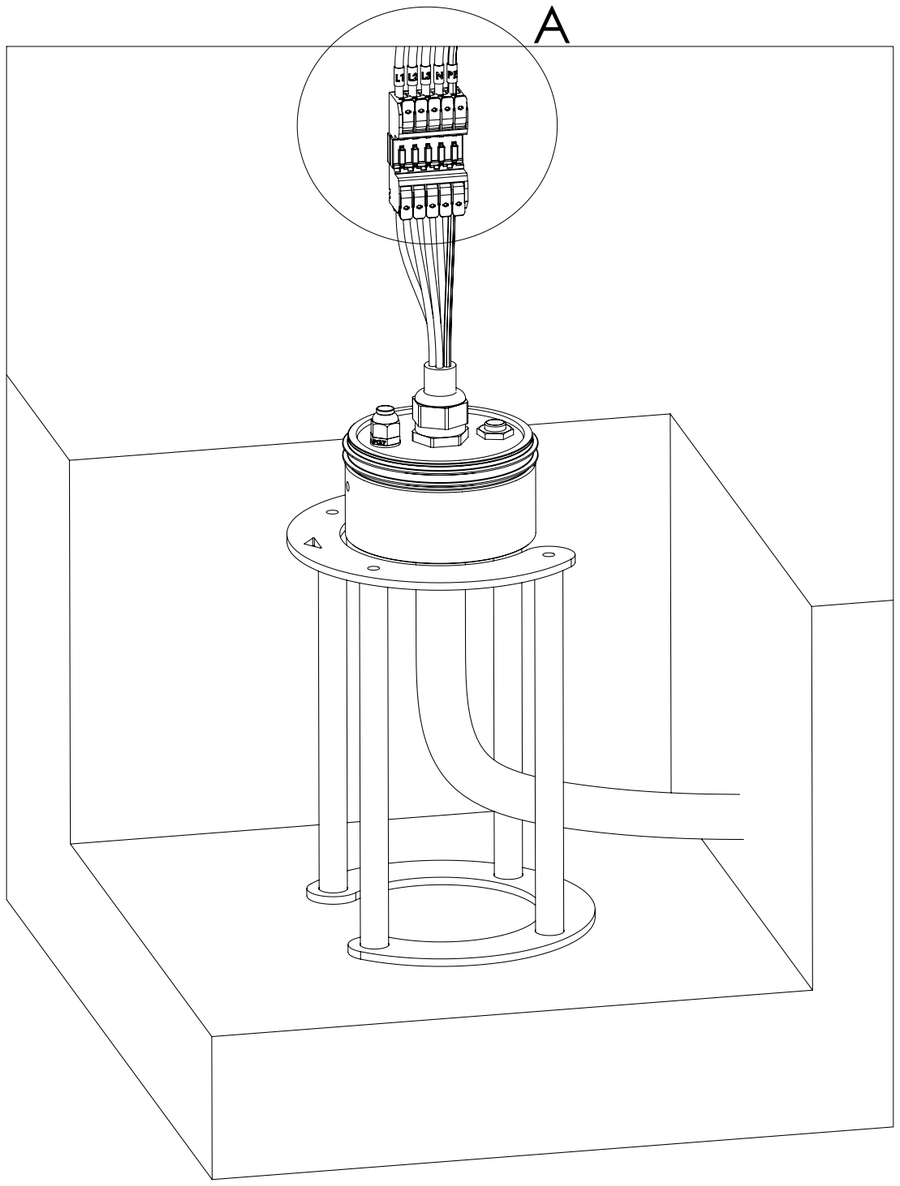

The illustrations portray a charger with only one socket. There could be some minor variations in other models.

Installation Guide - Astreea® SmartCharger - All vertical models

4.2 Link the wires to the terminal strip

After you've customized the wire length and removed the cable insulation, proceed to connect the wires.
Refer to the connection diagram in the table below, which illustrates how to connect the ground-side supply line to the charging unit cables along with their respective functions.
Ensure the wires are connected accurately, as failure to do so could result in charger damage or personal injuries.

Supply Line Ground		Terminal Strip	Loading Unit	
Colour	**Function**	**Label**	**Colour**	**Function**
Brown	Phase 1	L1	Brown	Phase 1
Black	Phase 2	L2	Black	Phase 2
Grey	Phase 3	L3	Grey	Phase 3
Blue	Neutral Conductor	N	Blue	Neutral Conductor
Green/Yellow	Protective Conductor	PE	Green/Yellow	Protective Conductor

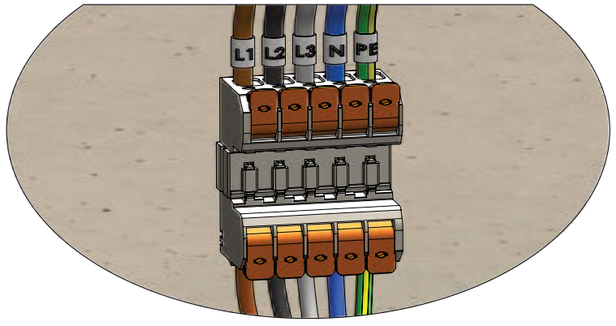

Only qualified personnel should undertake the electrical installation of the charging station.

During the electrical system installation, it is crucial to prevent cable damage or compression, as these issues could disrupt functionality in the future, lead to defects, or even trigger a fire.

The illustrations portray a charger with only one socket. There could be some minor variations in other models.

5. Finishing the installation

5.1 Fix the charger to the foundation

After securely connecting the cables, carefully insert the socket back into the Charger and position it over the Foundation Frame. Ensure that the holes in the Charger's base align with those in the Foundation Frame.

To affix the charger to the Foundation Frame, utilize 4 x M8 domed screws, which are provided.
If you attempt to affix the charger without the Foundation Frame, use conexpands instead.

Remember to apply pipe lubricant on the sealing before reinserting the socket into the charger.

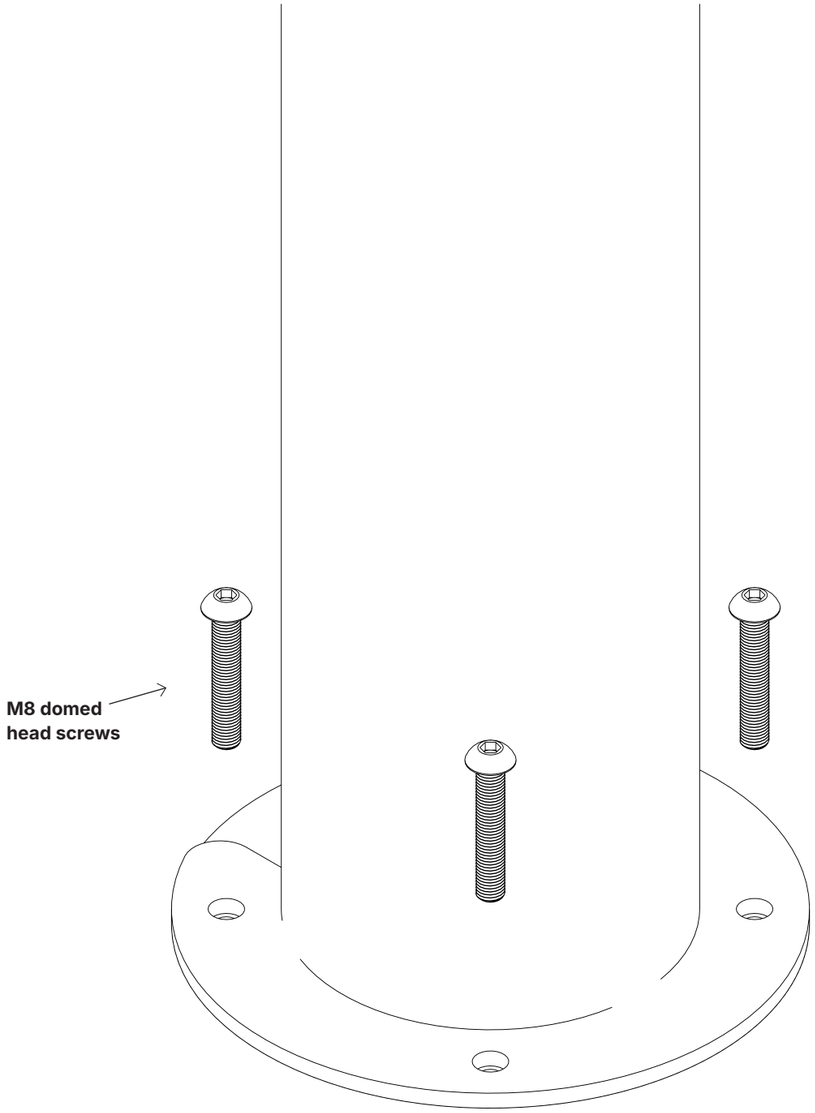

ASTREEA® SMARTCHARGER SELF STANDING

READY TO USE

Scan the QR code provided on the Certificate of Conformity and follow the instructions within the mobile application to register your charger.

If you possess a double socket charger, be sure to scan both QR codes.

A sluggish or unreliable internet connection can result in the mobile application not functioning as expected, leading to delayed responses and potential crashes. It's essential to ensure a stable internet connection is maintained for both the charger and the mobile app to operate smoothly.

astreea®

Made in EU
Astreea Charger

Voltage:	3 x 400V AC 3P+N+PE
Input current:	32A
Output current:	32A
Frequency:	50Hz
Protection class:	IP55
Tmin/max:	-25°C/+50°C

astreea.com/smartcharger

The Astreea® SmartCharger includes a sticker that contains crucial information about the charging station. Whether or not you choose to affix the sticker to the smart charger body is entirely optional.

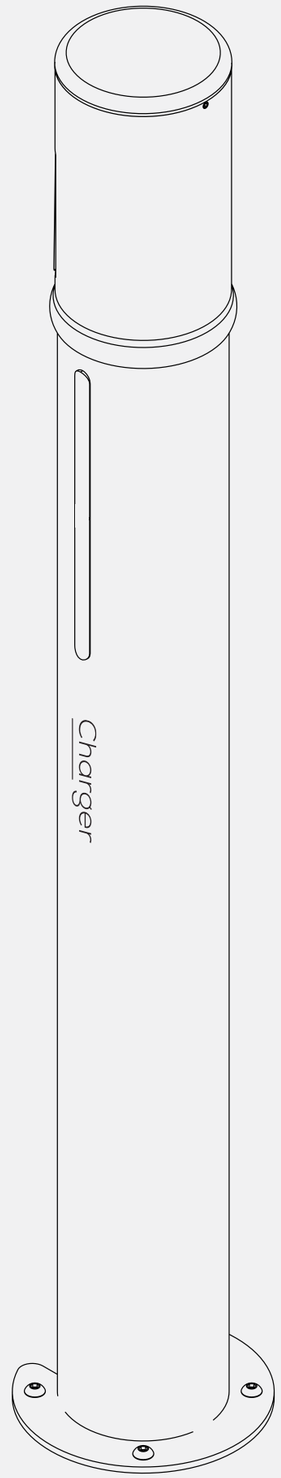

astrəea®

Installation Guide for wall mount chargers

Wallmount Chargers

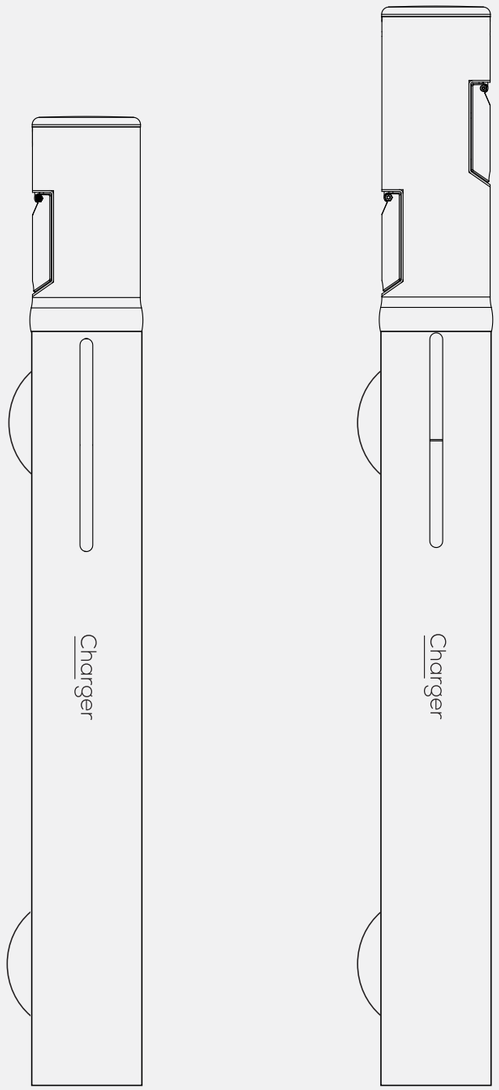

1. Anchoring the charger to the wall

1.1 Choosing the installation surface

Prior to charger installation, it is essential to select an appropriate mounting surface capable of enduring both the installation process's forces and the everyday wear and tear of the charging station.
Astreea® suggests utilizing concrete as the preferred mounting surface, ensuring it possesses the necessary physical characteristics suitable for both installation and long-term use.

Step 1. Mark a line with a length of approximately 90mm at a height of 950mm from the ground. Ensure that this line is perfectly horizontal using a level.

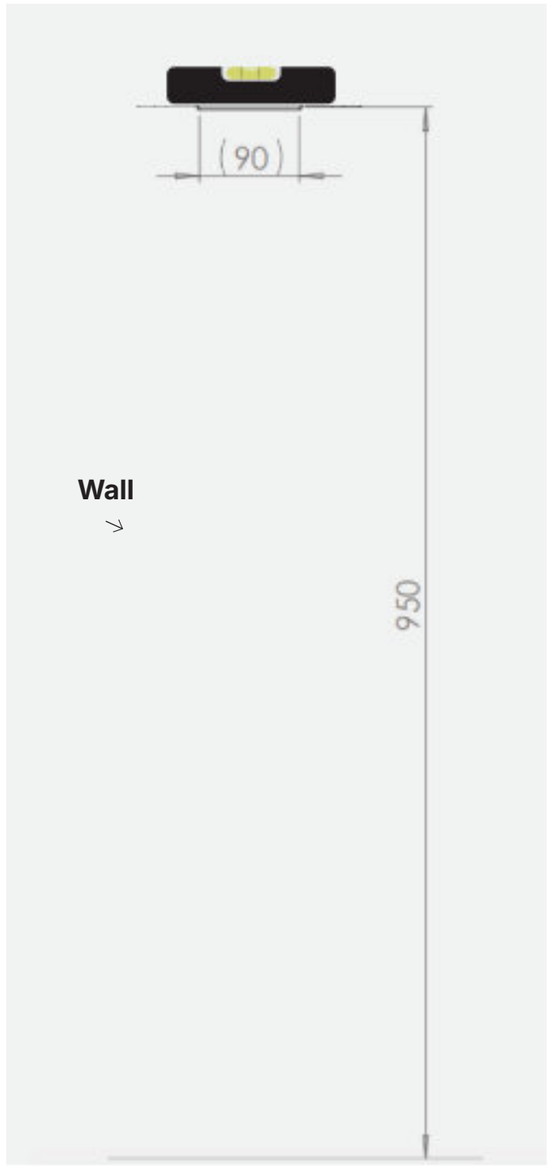

1.2 Mounting on the chosen surface

Step 2. Place the support piece on the wall, aligning the hole marked at the bottom with the other two holes matching the line drawn on the wall, marking the positions of the fastening holes. The diameter of these holes is determined by the chosen fastening system.
The fastening system is not included in the package; it should be selected based on the type of wall for the installation.

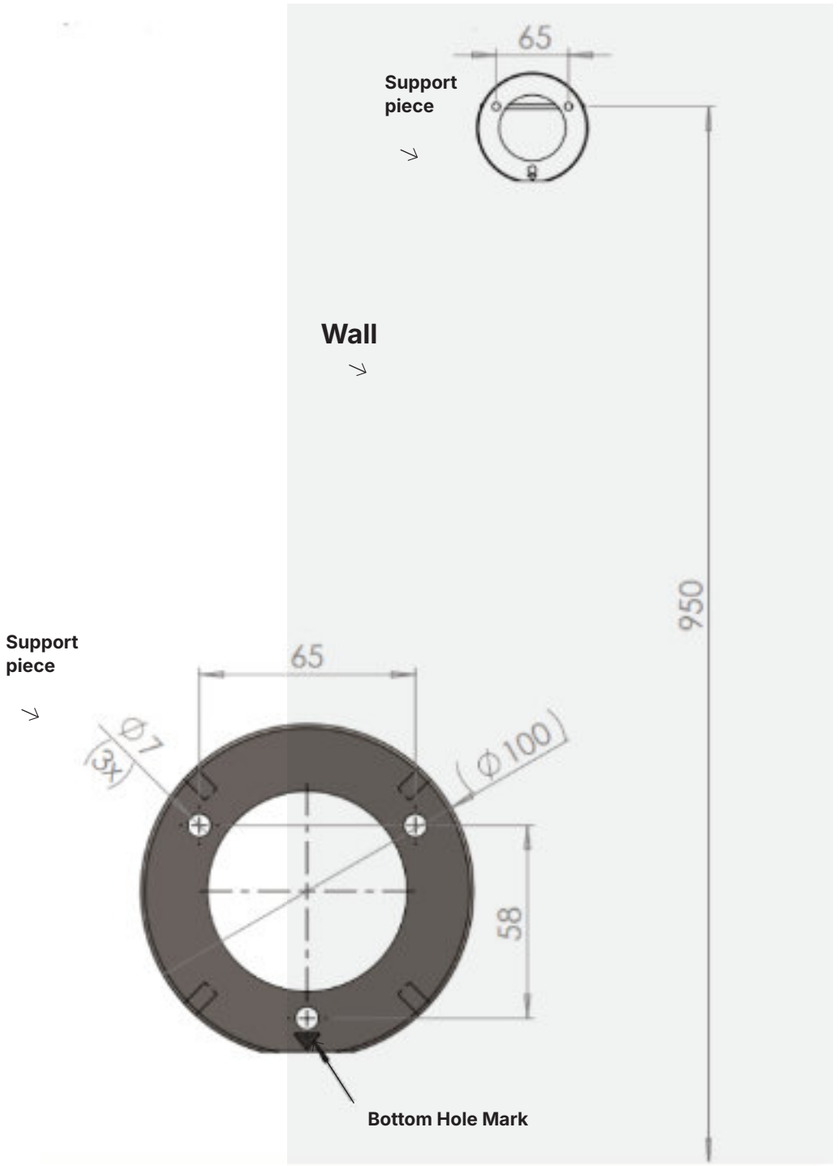

The illustrations portray a charger with only one socket. There could be some minor variations in other models.

1.3 Mounting on the chosen surface

Step 3. After attaching the support piece to the wall, you should mark the positions of the other two fastening holes for the lower support according to the specified measurements. Pay close attention to their alignment, ensuring they are perfectly vertical and centered with respect to the support piece.

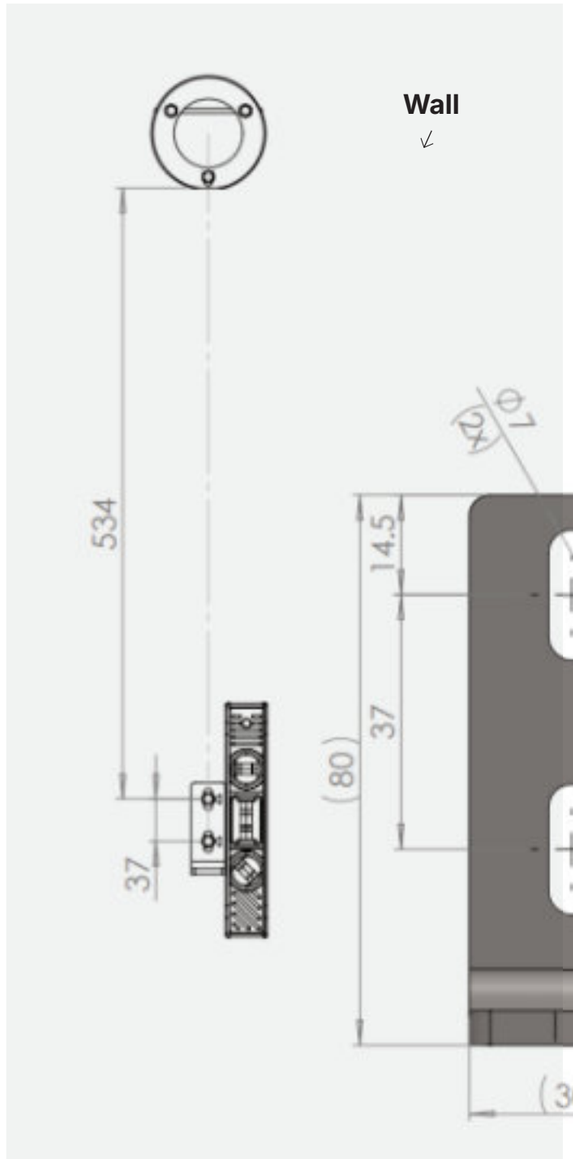

CAUTION:
When securing the lower support, make sure it aligns vertically.

Bottom support piece

The illustrations portray a charger with only one socket. There could be some minor variations in other models.

1.4 Mounting the Inferior Cap

1. Unscrew the two M5x10 screws to remove the bottom cover of the station.
2. Detach the WAGO female connector.
3. Screw the conduit gland onto the bottom cover.

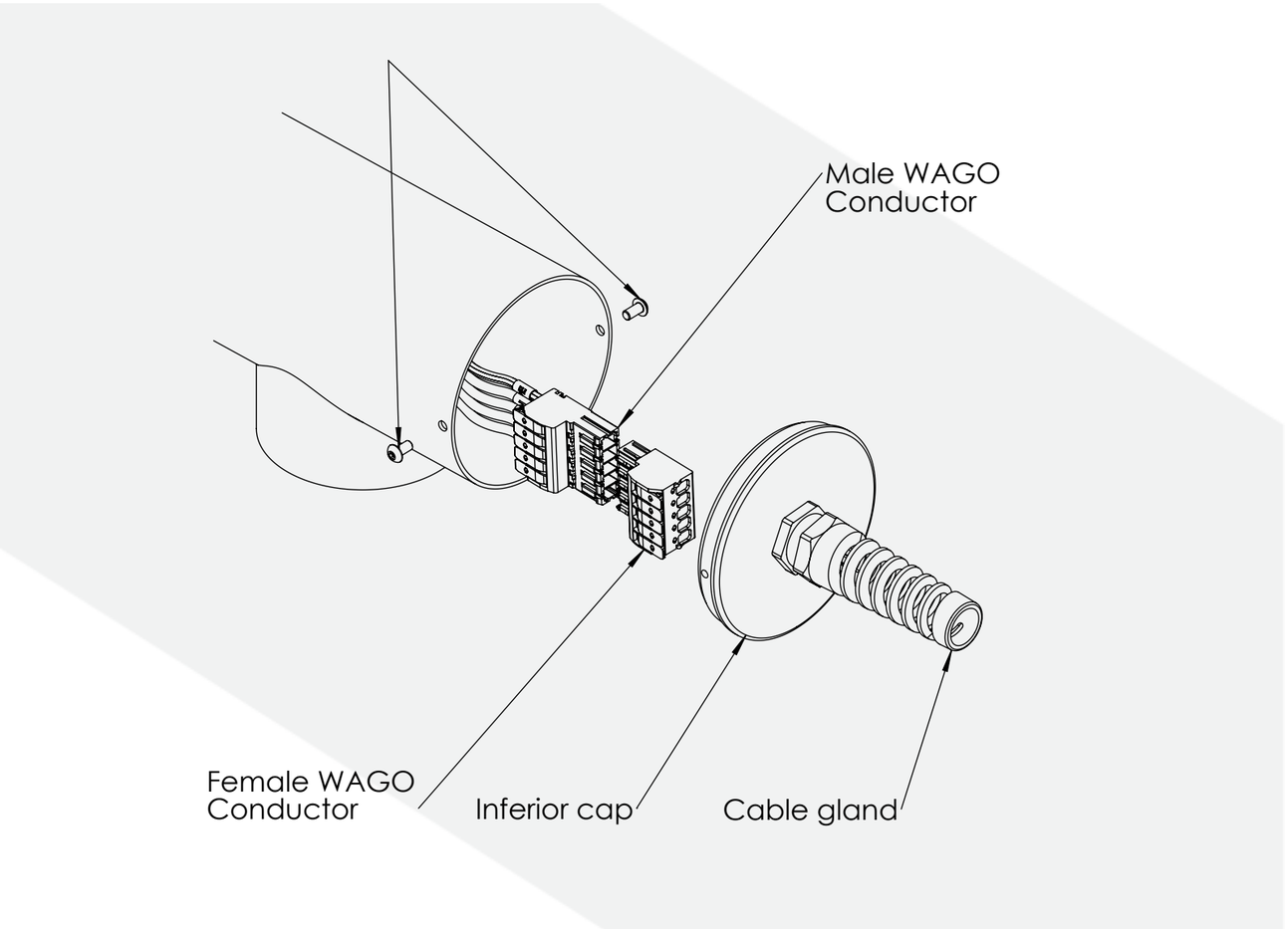

The illustrations portray a charger with only one socket. There could be some minor variations in other models.

1.5 Mouting on the wall

Position the station on the wall, using the support piece, while also checking if the lower support needs to be adjusted vertically.
If repositioning is required, ensure that the station is securely fastened both at the bottom and the top.
Tightening the screws should only be done once all fastening screws have been partially threaded in.

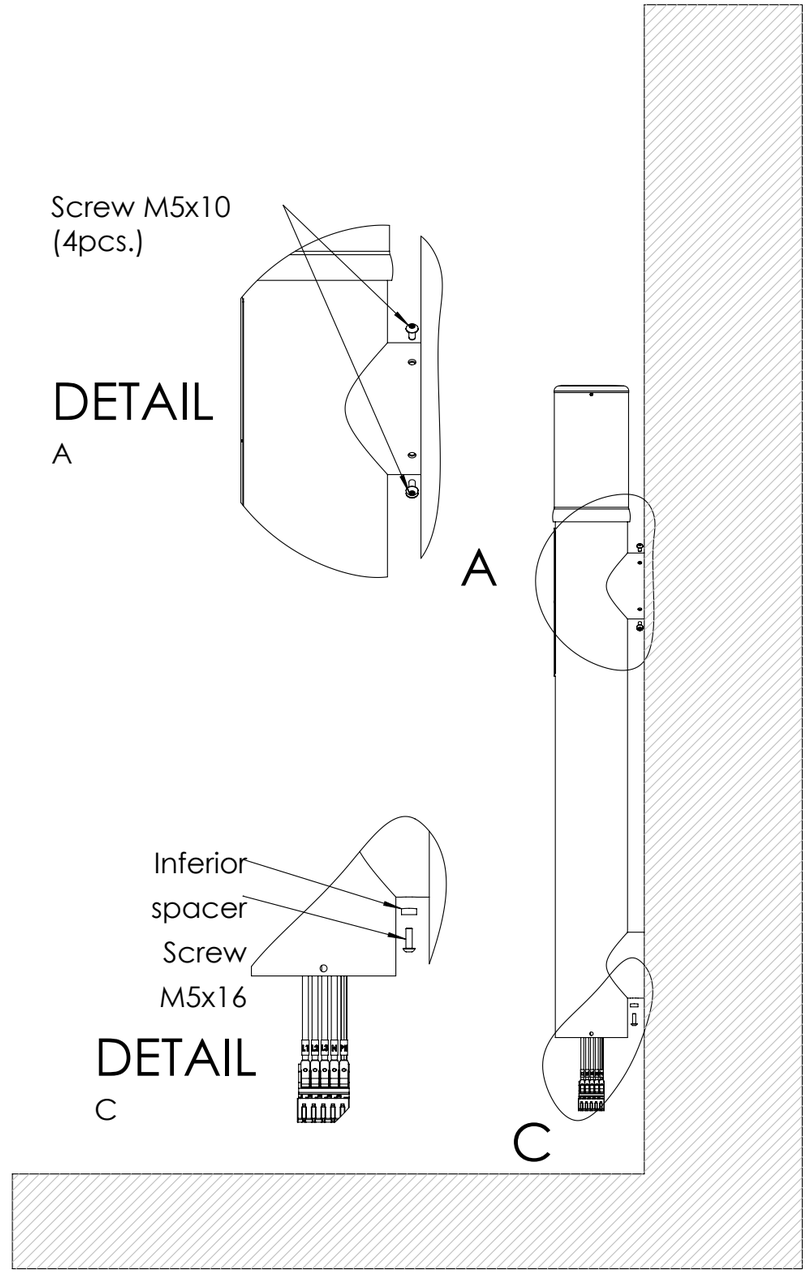

The illustrations portray a charger with only one socket. There could be some minor variations in other models.

1.6 Linking the supply line and wires

The power cable should be passed through the conduit gland and the first bottom cover. Connect the wires to the WAGO female connector according to the following diagram:

Supply Line Ground		Terminal Strip	Loading Unit	
Colour	**Function**	**Label**	**Colour**	**Function**
Brown	Phase 1	L1	Brown	Phase 1
Black	Phase 2	L2	Black	Phase 2
Grey	Phase 3	L3	Grey	Phase 3
Blue	Neutral Conductor	N	Blue	Neutral Conductor
Green/Yellow	Protective Conductor	PE	Green/Yellow	Protective Conductor

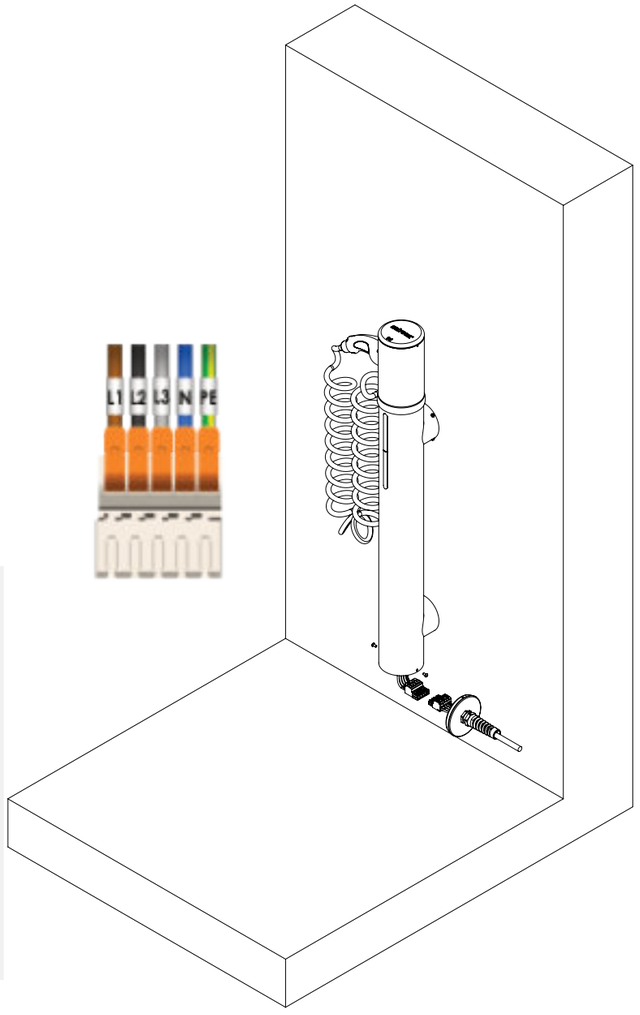

Only qualified personnel should undertake the electrical installation of the charging station.

During the electrical system installation, it is crucial to prevent cable damage or compression, as these issues could disrupt functionality in the future, lead to defects, or even trigger a fire.

The illustrations portray a charger with only one socket. There could be some minor variations in other models.

1.7 Mounting the inferior cap

Mount the bottom cover onto the station body by tightening the two M5x10 screws. After tightening the screws, also tighten the conduit gland nut to ensure a proper seal.

CAUTION: Make sure the cable sheath reaches inside the station, and avoid tightening the conduit gland over the individual wires.

CAUTION: Make sure the cable sheath reaches inside the station, and avoid tightening the conduit gland over the individual wires.

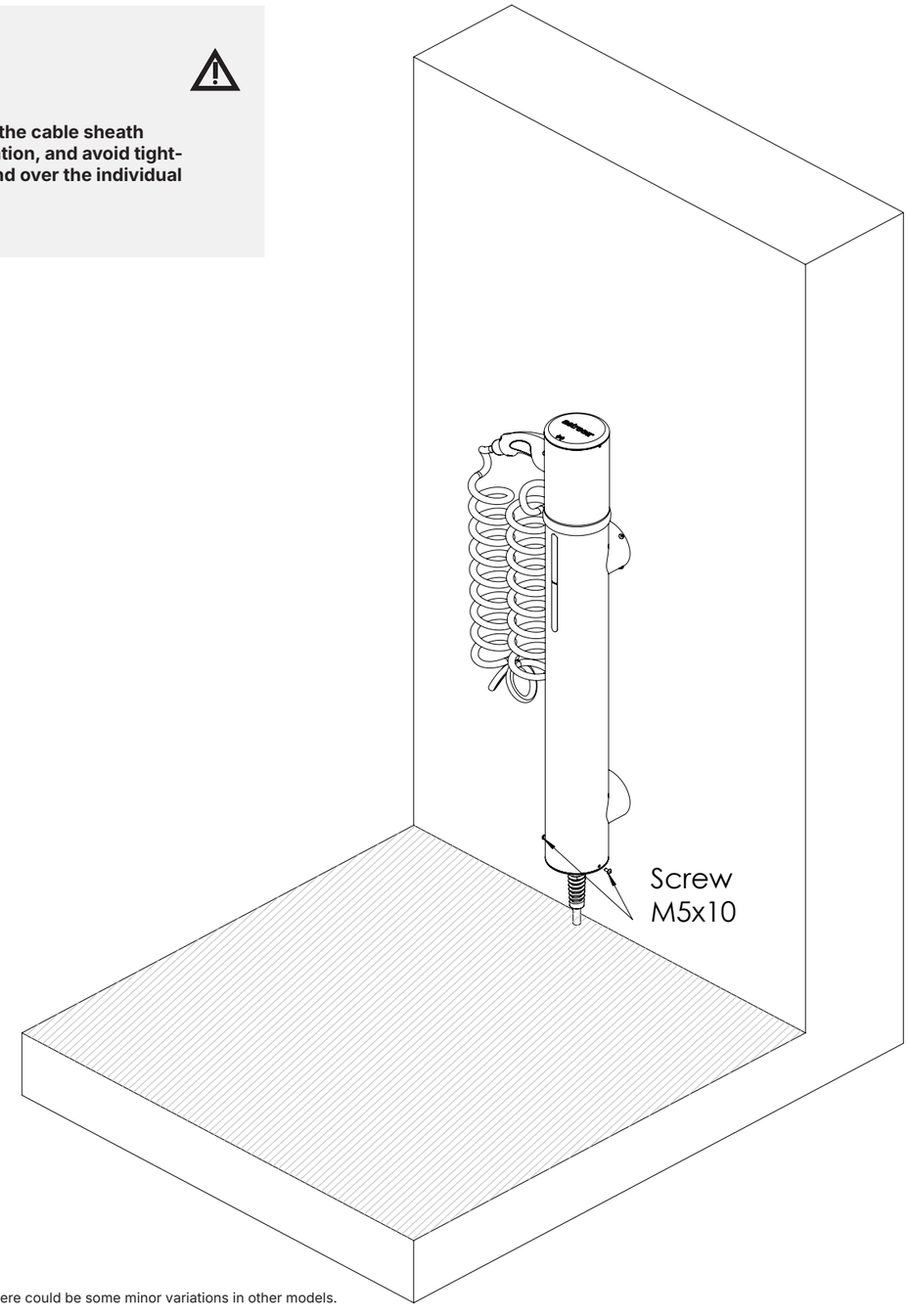

The illustrations portray a charger with only one socket. There could be some minor variations in other models.

ASTREEA® CHARGER SELF STANDING

READY TO USE

Scan the QR code provided on the Certificate of Conformity and follow the instructions within the mobile application to register your charger.

If you possess a double socket charger, be sure to scan both QR codes.

A sluggish or unreliable internet connection can result in the mobile application not functioning as expected, leading to delayed responses and potential crashes. It's essential to ensure a stable internet connection is maintained for both the charger and the mobile app to operate smoothly.

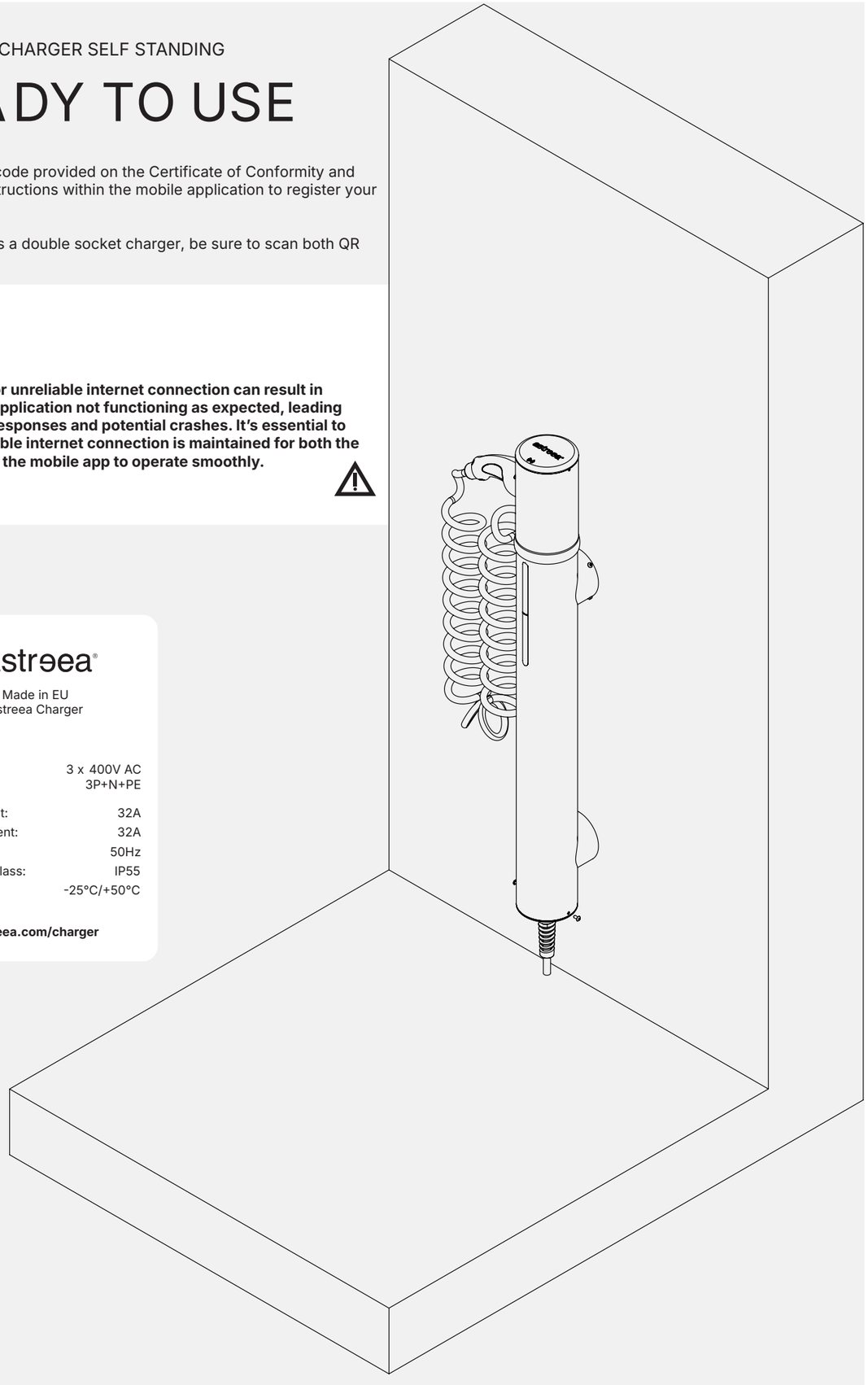

astrəea®

Made in EU
Astreea Charger

Voltage:	3 x 400V AC 3P+N+PE
Input current:	32A
Output current:	32A
Frequency:	50Hz
Protection class:	IP55
Tmin/max:	-25°C/+50°C

astreea.com/charger

LED status indicator

The Astreea® Charger is equipped with an integrated status monitoring system, which relies on the installed RBGW LED.

The LED's colors are preset and cannot be customized by the user during installation. Each color corresponds to a potential state of the charger, offering live information regarding the station's condition.

If the LED bar is not illuminated, it may indicate an issue with either the power system or the LED bar itself. It is advisable to reach out to Astreea® Support for assistance in such cases.

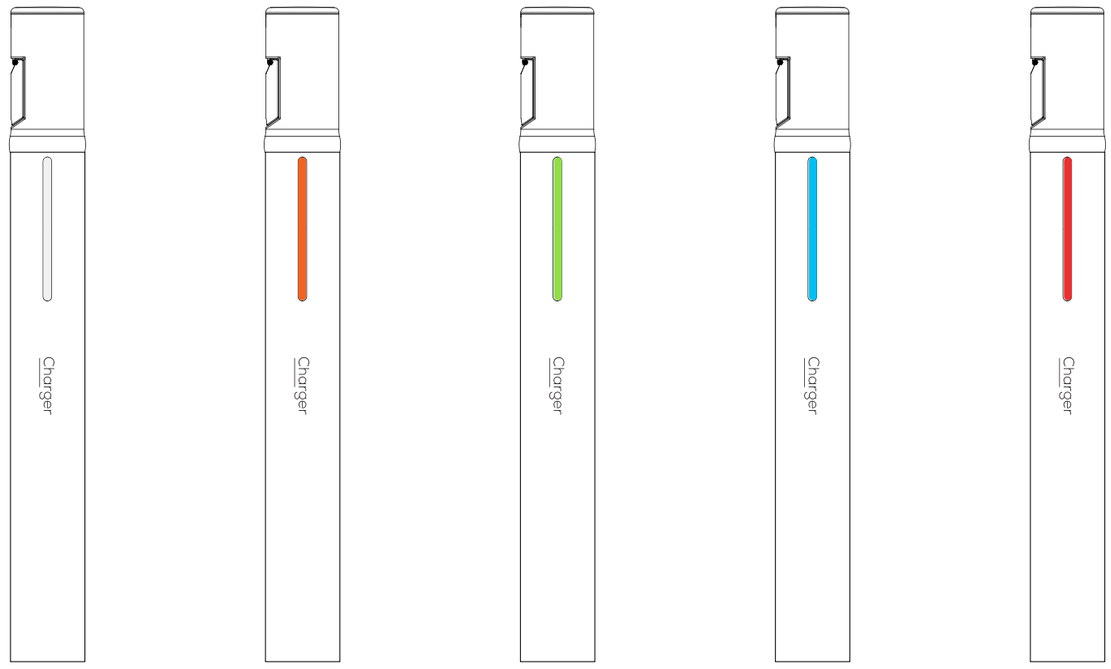

THE COLORS REPRESENT:

- **White:** The charger is in the process of initializing and downloading the most recent software update, if one is available.
- **Orange:** The station is waiting for enrollment. This may occur during the initial setup of the charger or when the connection to Wi-Fi is lost.
- **Green:** The charger is ready for charging.
- **Blue:** The charger is waiting for authorization via the app or an NFC/RFID card.
- **Blue – pulsating:** The charging process is currently in progress.
- **Red:** The station has encountered a fault. Please contact Astreea® Support for assistance.

Installation Guide - Astreea® SmartCharger - All vertical models
astreea

4. Astreea® Charger App

How to use the mobile app

Privacy notice - tap “Continue” after reading the privacy notice

Login screen - enter your account details or login with your Apple account



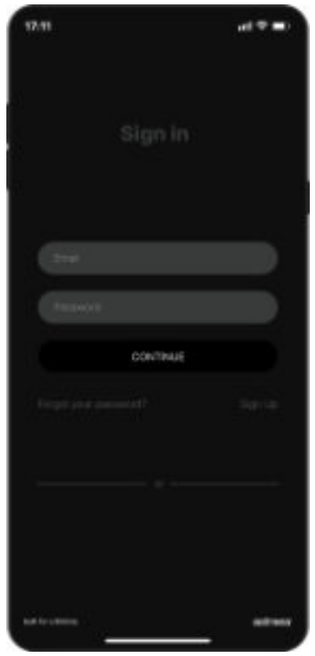

After log in - tap “Start pairing” button and enable the Camera Permission in order to scan the QR Code provided to you in the Certificate of Conformity.





After scanning the code, connect the charger to your local Wi-Fi network and wait for the enrollment to finish.





Charging screen - you have a full status of your Charger(s), the duration and costs for each and additional settings

Status screen - you’ll get a full status of your charge.

Press "settings" icon to change settings.

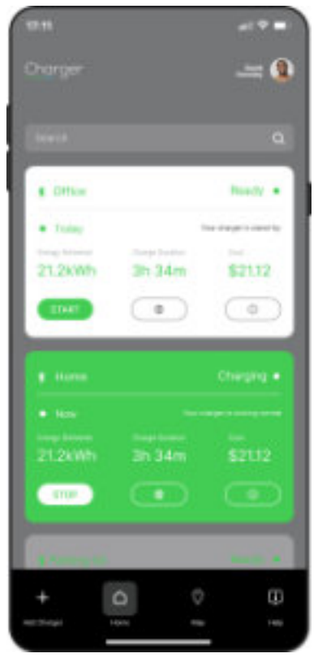



Proudly manufactured by Astreea® in the European Union

Installation Guide - Astreea® SmartCharger - All vertical models

4. Astreea® Charger App

How to use the mobile app

Charger Settings - here you can change the charger name, the price per kWh and currency, the maximum charging power and you can select to use the charger freely without the app.

Charger is private/public - complete this form to make your charger public.
To obtain the two Stripe keys, go to stripe.com

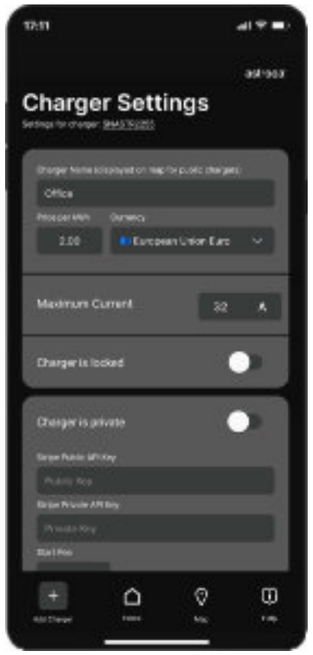

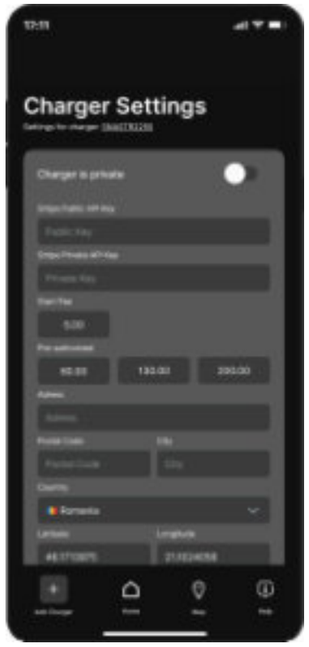

Remove charger - tap “Remove" icon and then enter charger name for confirmation.

After confirmation, your charger will be removed from all devices.



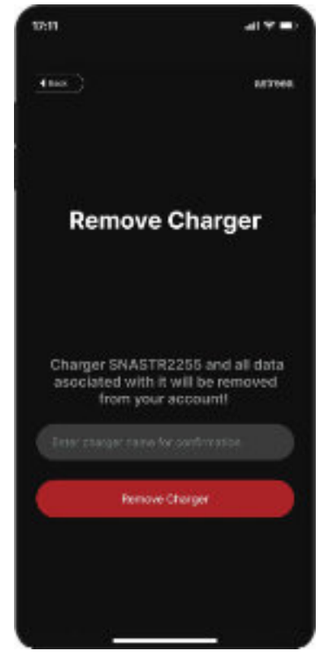

Proudly manufactured by Astreea® in the European Union

The Certificate of Conformity

The Certificate of Conformity (CoC) contains crucial details about your charger purchase. To register your Astreea® Charger using the mobile application, you must utilize the app to scan the QR codes found on the CoC. Please note that Astreea® will not issue duplicate CoCs.

Exercise caution when sharing the QR codes with others, as scanning them grants significant access to your charger.

astreea SmartCharger

EU Declaration Of Conformity

no.



Manufacturer: ARSAT INDUSTRIE S.R.L.
Product : **AC CHARGING STATION FOR ELECTRIC VEHICLES**
Model: **Astreea SmartCharger** ACS1111, ACS1112, ACS1121, ACS1122, ACS1211, ACS1212, ACS1221, ACS1222, ACS1131, ACS1132, ACS1141, ACS1142, ACS1231, ACS1232, ACS1241, ACS1242, ACS2111, ACS2112, ACS2121, ACS2122, ACS2211, ACS2212, ACS2221, ACS2222, ACS2131, ACS2132, ACS2141, ACS2142, ACS2231, ACS2232, ACS2241, ACS2242, ACS3111, ACS3131
Serial no: **SNASTR2459**

Product Assessment **Certificate of Conformity, no. 4101-CT-32025/23.06.2025, Certificate of RoHS conformity, no. 4100-RoHS-32025 Assessment Report no.4101-CT-32025/20.02.2025,**
issued by:
Product Certification Body CEPROM SA
440240 Satu Mare, 23/A Fântânele st., Satu Mare, Romania.

- ✓ **Test Report no.1269/06.06.2025**, issued by CEPROM-LCI Testing Laboratory;
- ✓ **EMC Test Report no.1454/06.06.2025**, issued by CEPROM-LCI Testing Laboratory
- ✓ **Test Report RoHS VJ-0619-0000-25/03.04.2025**

We, Astreea S.R.L., declare that the product described above satisfies the relevant provisions of:

- ✓ **Low Voltage Directive 2014/35/EU;**
- ✓ **Electromagnetic Compatibility Directive 2014/30/EU.**
- ✓ **Directive RoHS 2011/65/CE**

For most of the risks specific to this product, the design, manufacture and assessment of safety and compliance with the requirements of the above directives has been based on the following standards:

***EN IEC 61851-1:2019.** Electric vehicle conductive charging system - Part 1: General requirements;
***EN IEC 61851-21-2:2021.** Electric vehicle conductive charging system - Part 21-2: Electric vehicle requirements for conductive connection to an AC/DC supply - EMC requirements for off board electric vehicle charging systems.
***EN 62321-1 :2014** Determination of certain substances in electrotechnical products - Part 1: Introduction and overview

Place and issuing date: Pecica, Romania, at 20.06.2025

DIRECTOR
Andrei Ghinea

astreea CE


CEPROM
PRODUCT CERTIFICATION BODY
CEPROM-CERT

CEPROM ® S.A.
440240 Satu Mare, Str. Fântânele, Nr. 23/A, România
tel. +40.0361.804795; fax +40.0361.804796
www.ceprom.ro; e-mail: ceprom@ceprom.ro

CERTIFICATE OF CONFORMITY
No. 4101-CT-32025

Technical File No.: 4101-CT-32025

Applicant:	Manufacturer:
S.C. ASTREEA S.R.L. No. 53, 601 Street, 317235 Pecica, Arad county, Romania	S.C. ARSAT INDUSTRIE S.R.L. No. 53, 601 Street, 317235 Pecica, Arad county, Romania

Description of product:
Product: "astreea®" AC CHARGING STATION FOR ELECTRIC VEHICLES
Models: See Annex
Reference standards: EN IEC 61851-1:2019, EN IEC 61851-21-2:2021

Based on our assessment we confirm that the product is in accordance with the technical requirements of the above standards and hence fulfils the technical requirements of the
Low Voltage Directive 2014/35/EU
Electromagnetic Compatibility Directive 2014/30/EU
The manufacturer shall affix the CE marking to each product that is in conformity with those described in this Certificate of conformity, after completion of the EU Declaration of Conformity and in accordance with the above directives.
The manufacturer must ensure the assessment of conformity with internal controls on the maNofacture of the above product, in accordance with Annex III of 2014/35/EU Directive and Annex II of 2014/30/EU Directive.
The assessment activity for the product described in this Certificate of Conformity was carried out in compliance with Scheme 1a, cf. EN ISO/IEC 17067:2013 with Assessment Report and doesn't belong in the scope of the notification under harmonised European Union product legislation.
This Certificate of Conformity was issued on voluntary basis of manufacturer and is only valid for the product and configuration described (annex), in conjunction with the detailed test data and with all applicable legal requirement for the product.

Annex: Product Identification – 10 pages
Issuing Date: 23.06.2025
Expiry Date: 22.06.2030

GENERAL MANAGER
eng. Cristian SOPONOS

UNIUNEA EUROPEANĂ
Satu Mare, România
Manager CEPROM-CERT
eng. Vasile ZELE

T.S.

Partial reproduction of this certificate is prohibited
This Certificate of Conformity is valid only if published on the website www.ceprom.ro


CEPROM
ORGANISM DE CERTIFICARE PRODUSE
CEPROM-CERT

CEPROM ® S.A.
440240 Satu Mare, str. Fântânele, Nr. 23/A, România
tel. +40.0361.804795; fax +40.0361.804796
www.ceprom.ro; e-mail: ceprom@ceprom.ro

CERTIFICAT DE CONFORMITATE
Nr. 4100-RoHS-32025

Dosar tehnic nr.: 4100-RoHS-32025

Solicitant:	Producător:
S.C. ASTREEA S.R.L. 317235 Pecica, str. 601, nr. 53, jud. Arad, Romania	S.C. ARSAT INDUSTRIE S.R.L. 317235 Pecica str. 601, nr. 53, jud. Arad, Romania

Descrierea produsului:
Produsul: STAȚIE DE ÎNCĂRCARE ÎN CURENT ALTERNATIV PENTRU AUTOVEHICULE ELECTRICE "astreea®"
Modele: ACS1111, ACS1112, ACS1121, ACS1122, ACS1211, ACS1212, ACS1221, ACS1222, ACS1131, ACS1132, ACS1141, ACS1142, ACS1231, ACS1232, ACS1241, ACS1242, ACS2111, ACS2112, ACS2121, ACS2122, ACS2211, ACS2212, ACS2221, ACS2222, ACS2131, ACS2132, ACS2141, ACS2142, ACS2231, ACS2232, ACS2241, ACS2242, ACS3111, ACS3131

Standard de referință: SR EN 62321-1:2014
În baza evaluării efectuate confirmăm că produsul este în conformitate cu cerințele tehnice ale standardului de mai sus și reglementărilor conexe acestuia, astfel îndeplinește pe deplin cerințele esențiale din
Directiva RoHS 2011/65/CE
- Dosarul tehnic conține toate informațiile relevante.
- Au fost efectuate testele corespunzătoare.
- Standardele și standardele transpuse, după caz, au fost aplicate corect.

Menținerea certificării se face în baza respectării cerințelor din contractul de certificare.

Issuing Date: 23.06.2025

ADMINISTRATOR
ing. Cristian SOPONOS

EUROPEAN UNION
Satu Mare, Romania
Manager CEPROM–CERT
ing. Vasile ZELE

E.S

Partial reproduction of this certificate is not allowed
This Certificate of Conformity is valid only if it is published on the site www.ceprom.ro

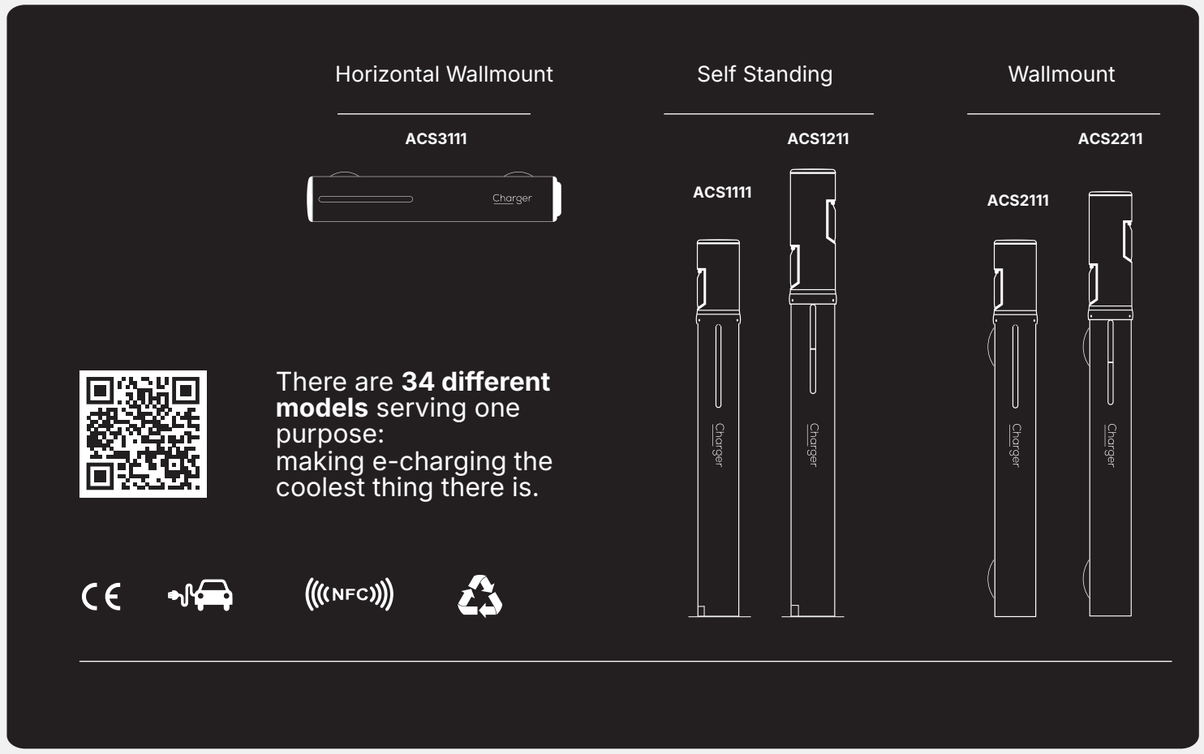

Certificate

Standard **ISO 9001:2015**

Certificate Registr. No. **01 100 1521053**

Certificate Holder: **ARSAT INDUSTRIE S.R.L.**
Str. 601 nr. 53
317235 Pecica, jud. Arad
Romania

Scope: Production of aircraft engines transportation stands.
Production of igloo-type pavilions for HORECA industry.
Manufacturing of parts through mechanical processing and welded metal structures. Production of charging stations for electric vehicles.

Proof has been furnished by means of an audit that the requirements of ISO 9001:2015 are met.

Validity: The certificate is valid from **2025-11-28** until **2028-11-27**.
First certification 2004

2025-11-17

TÜV Rheinland Cert GmbH
Am Grauen Stein · 51105 Köln

® TÜV, TUEV and TÜV are registered trademarks. Utilisation and application requires prior approval.

www.tuv.com

TÜVRheinland®
Precisely Right.

Certificate

Standard **ISO 14001:2015**

Certificate Registr. No. **01 104 1521053**

Certificate Holder: **ARSAT INDUSTRIE S.R.L.**
Str. 601 nr. 53
317235 Pecica, jud. Arad
Romania

Scope: Production of aircraft engines transportation stands.
Production of igloo-type pavilions for HORECA industry.
Manufacturing of parts through mechanical processing and welded metal structures. Production of charging stations for electric vehicles.

Proof has been furnished by means of an audit that the requirements of ISO 14001:2015 are met.

Validity: The certificate is valid from **2025-11-28** until **2028-11-27**.
First certification 2016

2025-11-17

TÜV Rheinland Cert GmbH
Am Grauen Stein · 51105 Köln

® TÜV, TUEV and TÜV are registered trademarks. Utilisation and application requires prior approval.

www.tuv.com

TÜVRheinland®
Precisely Right.

CSA Confidential

CSA GROUP

Baumusterprüfbescheinigung
type examination certificate

gemäß: Anlage 4 Modul B der Mess- und Eichverordnung vom 11.12.2014
in accordance with: Annex 4 Module B ofthe Measures and Verification Ordinance dated 11.12.2014

Nr. / *No.*: DE MTP 20 B 011 M

Ausgestellt für:
Issued to:
ISKRA, d.o.o.
Stegne 21, SI-1000 Ljubljana, Slovenia

Geräteart: Elektrizitätszähler für Wirkverbrauch
Type: *Active electrical energy meter*

Typenbezeichnung: **WM3M4C**
Type Code:

Objektbeschreibung: Drehstrom- und Wechselstromzähler
Properties: 4L- und 2LAnschluss direkt
three and single phase watt hour meter
4W and 2W connection direct

Auftrags Nr.: **80079721-00 Rev_0**
Order No.:
gültig bis: **4.6.2030 (SI 20-11-010 MID, Revision 2)**
valid until:

Notifizierte Stelle
Named authority
Registriernummer
Registration Number
1948

Prüfgrundlagen:
Testing requirements: PTB-A20.1 / PTB-A50.7

Rechtsbezug: Mess- und Eichgesetz vom 31.Juli 2013
Legal reference: Verordnung über das Inverkehrbringen und die Bereitstellung von Messgeräten auf dem Markt, Veröffentlicht im BGBl am 11.12.2014

Datum / *date:*14.10.2021

Eduard Stangl
Leiter der Zertifizierungsstelle

Baumusterprüfbescheinigungen ohne Unterschrift haben keine Gültigkeit. Dieses Zertifikat und Anlagen dürfen nur unveändert weiterverbreitet werden. Auszüge bedürfen der Genehmigung der CSA Group Bayern GmbH.
Type examination certificates without signature are not valid. This certificate and its appendix are allowed to dispatch only without any changes.
The use of extracts needs the authorization of CSA Group Bayern GmbH.

CSA Group Bayern GmbH is Notified Body in accordance with MessEV/MessEG
File: CSA_B_F50_41_Rev1_0

REPUBLIKA SLOVENIJA
MINISTRSTVO ZA GOSPODARSKI RAZVOJ IN TEHNOLOGIJO
URAD RS ZA MEROSLOVJE
Tkalška ulica 15, 3000 Celje

T: 03 428 07 50
F: 03 428 07 60
E: gp.mirs@gov.si
www.gov.si

SLOVENSKA AKREDITACIJA
SIST EN ISO/IEC 17065
CP-014

CERTIFIKAT o EU-pregledu tipa
EU-Type Examination Certificate

št. /*No.* **SI 20-11-010 MID** revizija št. / Revision No.: **2**

certifikat izdal
Issued by: **Urad RS za meroslovje**
Metrology Institute of the Republic of Slovenia (MIRS)

Priglašen organ št. **1376** certifikacijski organ ni akreditiran za namen priglasitve
Notified body No. *the certification body is not accredited for the purpose of notification*

na podlagi
in accordance with: 1. odstavka 9. člena Zakona o meroslovju (Ur. list RS, št. 26/05 – uradno prečiščeno besedilo) in 14. člena Pravilnika o merilnih instrumentih (Ur. list RS, št. 19/16), ki povzema vsebino Direktive 2014/32/EU Evropskega parlamenta in Sveta z dne 26. februarja 2014 o harmonizaciji zakonodaj držav članic v zvezi z dostopnostjo merilnih instrumentov na trgu (prenovitev)
Metrology Act (OJ of RS, No. 26/05), Article 9. Paragraph 1, and Rules on measuring Instruments (OJ of RS, No. 19/16), Article 14, which implements Directive 2014/32/EU of the European Parliament and of the Council of 26 February 2014 on the harmonization of the laws of the Member States relating to the making available on the market of measuring Instruments (recast)

izdano vlagatelju
issued to: ISKRA, d.o.o.
Stegne 21, SI – 1000 Ljubljana, Slovenija

za
in respect of: **Trifazni in enofazni elektronski števec delovne električne energije**
Three-phase and single-phase electronic active energy meter

tip
type: WM3M4, WM3M4C

bistvene zahteve
essential requirements: Pravilnik o merilnih instrumentih, priloga 1, Bistvene zahteve, in Priloga 5 (MI-003), Števci delovne električne energije
Rules on measuring instruments, which implements Measuring Instruments Directive, Annex 1 Essential requirements, and Annex 5 (MI-003) Active electrical energy meters

veljavnost do
valid until: 4. 6. 2030

Glavne značilnosti, pogoji in omejitve so podani v prilogi, ki je sestavni del tega certifikata.
The principal characteristics, approval conditions are set out in the Annex hereto, which forms part of this this certificate.

Št. strani priloge: 9
No. of Annex pages:

Ta revizija certifikata v celoti zamenjuje prejšnjo verzijo certifikata.
This revision of the certificate completely replaces previous version.

Št. dokumenta: 6413-3/2021/20
Ljubljana, 8. 7. 2021

Postopek vodil:
Mag. Grega Kovačič
podsekretar

Dr. Samo Kopač
direktor

Ta certifikat je dovoljeno razmnoževati samo kot celoto na podlagi pisnega dovoljenja imetnika certifikata. Certifikat ima veljavo samo v 3ga ni veljaven. Z izdajo tega certifikata Urad RS za meroslovje ne prevzema nobene odgovornosti za posamezne primerke tipa merila.

2Ga Certifikat o EU-pregledu tipa merila rev2

1/1

Certificate

Standard **ISO 45001:2018**

Certificate Registr. No. **01 213 1521053**

Certificate Holder: **ARSAT INDUSTRIE S.R.L.**
Str. 601 nr. 53
317235 Pecica, jud. Arad
Romania

Scope: Production of aircraft engines transportation stands.
Production of igloo-type pavilions for HORECA industry.
Manufacturing of parts through mechanical processing and welded metal structures. Production of charging stations for electric vehicles.

Proof has been furnished by means of an audit that the requirements of ISO 45001:2018 are met.

Validity: The certificate is valid from **2025-12-19** until **2028-12-18**.
First certification 2016 (BS OHSAS 18001)

2025-11-17

TÜV Rheinland Cert GmbH
Am Grauen Stein · 51105 Köln

® TÜV, TUEV and TÜV are registered trademarks. Utilisation and application requires prior approval.

www.tuv.com

TÜVRheinland®
Precisely Right.

Zertifikat
Certificate

über die Anerkennung eines Qualitätsmanagementsystems nach der Mess- und Eichverordnung vom 11.12.2014
on the approval of a quality management system according to Measures and Verification Ordinance dated 11.12.2014

Rechtsbezug:
In accordance with:

Mess- und Eichverordnung vom 11. Dezember 2014 (BGBl. I S. 2010)
Measures and Verification Ordinance dated 11 December 2014 (Federal Gazette I, p. 2010)

CSA GROUP
Zertifikat
Certificate

Messgerätekategorie:
Measuring instrument category:
6.6 ZE: getrennt und integriert angeordnete Zusatzeinrichtungen für Elektrizitätsmessgeräte /
Additional device: separately and integrated additional device for electricity meter

Ausgestellt für:
Issued to:
ISKRA, d.o.o.
Stegne 21
SI-1000 Ljubljana
Slovenia

Zertifikat-Nr.:
Certificate number:
DE CSA 25 D 001

Gültig bis:
Valid until:
03.03.2028

Anzahl der Seiten:
Number of pages:
3

Projektnummer:
Project number:
80214509

Plattling, 04.03.2025

Thomas Weise
Leiter der Zertifizierungsstelle
Head of Certification Department

Konformitätsbewertungsstelle
Registration number
1948

CSA Group Bayern GmbH
Straubinger Strasse 100
94447 Plattling
Germany

Mail info.bayern@csagroup.org
Tel +49 (0) 9931 9836-0

www.csagroup.org

CSA Group Bayern GmbH is a Notified Body in accordance with Directive 2014/32/EU

File: CSA_B_F50_27_Rev12_0

Certified by:

Missing or you lost spares? Please call our customer service: (907) 931-4469

astreea®

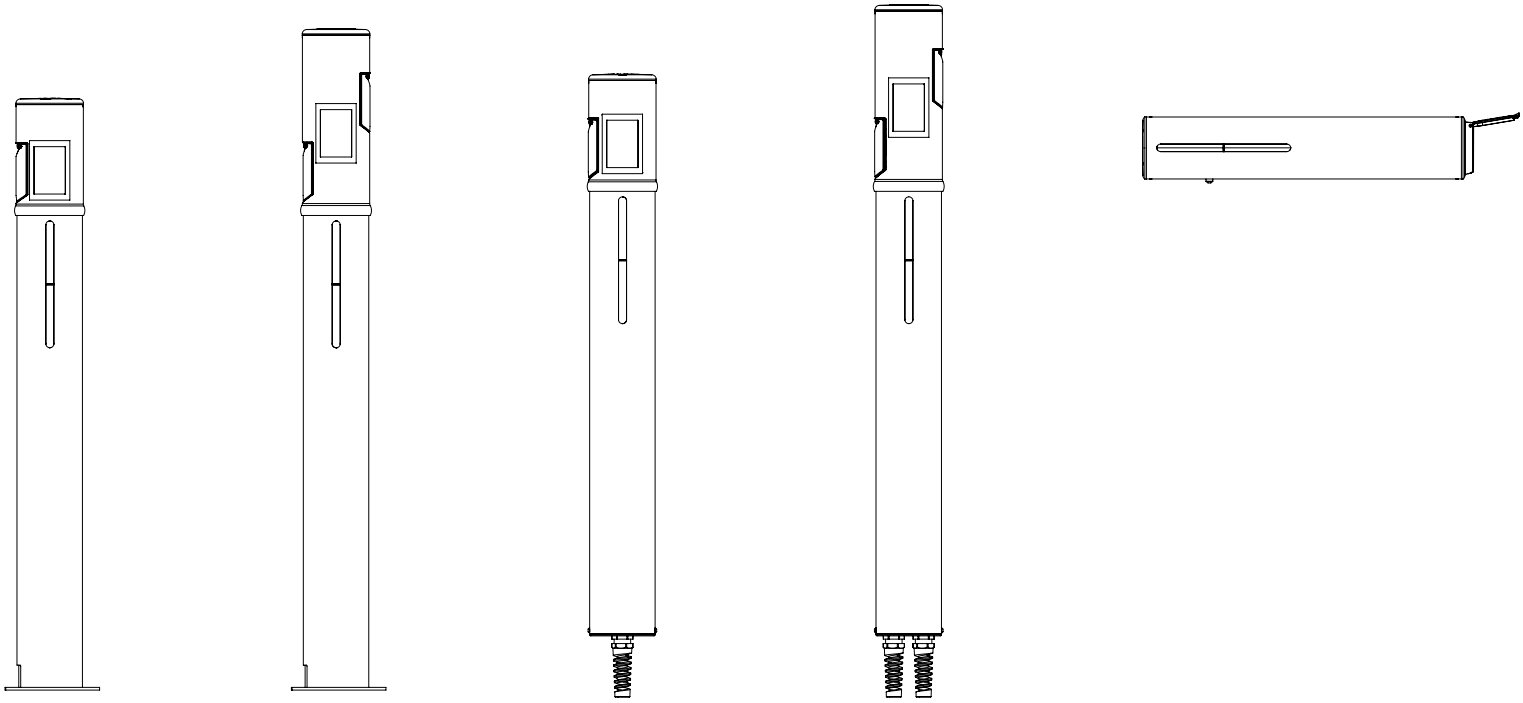

EV Charger – All Vertical Models

ACS1111, ACS1211, ACS2111 and ACS2211
(22KW) and subsets.

EV Charger – All Horizontal Wall Mount Models

ACS3111 and ACS3131
(22KW) and subsets.

Scan for:
astreea.com/smartcharger