SANY®

SPECIFICATION

40t

35m

51.5m

SRC400T

SANY ROUGH TERRAIN CRANE

QUALITY CHANGES THE WORLD

www.sanyglobal.com

SANY CRANE is one of the core business units in SANY Group, specializing in the development and manufacturing of high-end wheeled cranes, crawler cranes.

三一集团旗下核心事业部，从事高端轮式起重机、履带起重机系列产品的研发制造。

BETTER WORLD, BETTER SANY CRANE

SANY CRANE

SRC400T

SANY ROUGH TERRAIN CRANE
40T LIFTING CAPACITY

A 40t rough terrain crane with four section 35m boom, featuring stronger capacity yet reduced self-weight. Key components come from International name brands. Operator comfort is improved by brand new cab design.

一款最大起重量40吨，4节臂，全伸臂长35m的越野起重机，自重轻，性能强，核心部件均为国际知名供应商提供，配备全新操纵室，驾驶、操作舒适度全面升级。

Strong lifting capacity
Best in class

超强性能

吊载性能行业领先

New generation operator's cab
Ergonomic concept of safety and comfort

全新操纵室

操作安全、舒适、人机工程全面升级

Brand-name components
DF Cummins engine/Dana transmission/Meritor axles

国际知名供应商

东风康明斯发动机/德纳变速箱/美驰车桥

All New Operator's Cab
全新操纵室

Safety & Reliability
安全可靠

Comfort & Convenience
舒适便捷

Simplicity & Efficiency
简单高效

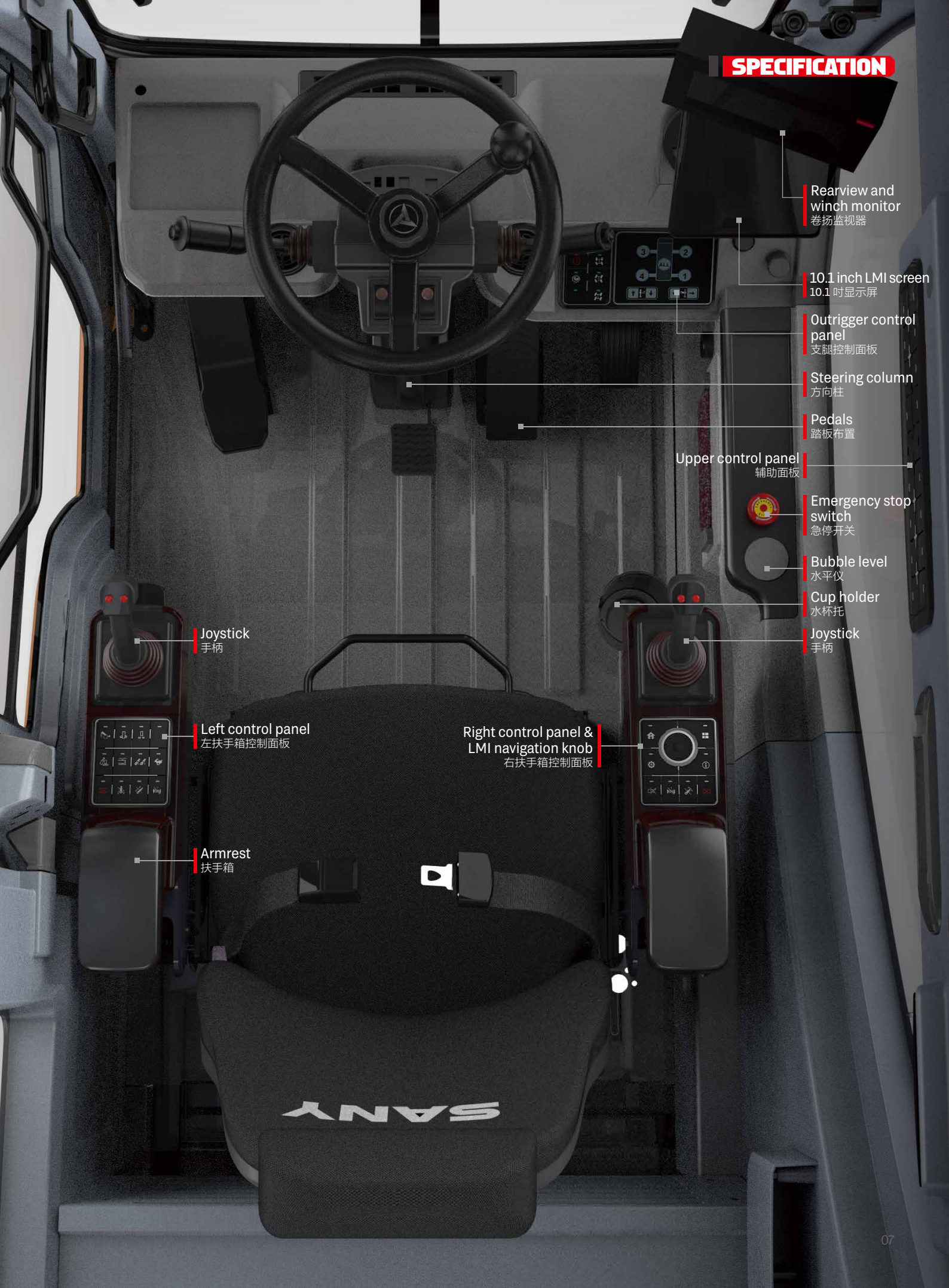
Rearview and winch monitor
卷扬监视器
10.1 inch LMI screen
10.1 吋显示屏
Outrigger control panel
支腿控制面板
Steering column
方向柱
Pedals
踏板布置
Upper control panel
辅助面板
Emergency stop switch
急停开关
Bubble level
水平仪
Cup holder
水杯托
Joystick
手柄
Joystick
手柄
Left control panel
左扶手箱控制面板
Right control panel & LMI navigation knob
右扶手箱控制面板
Armrest
扶手箱
SANY

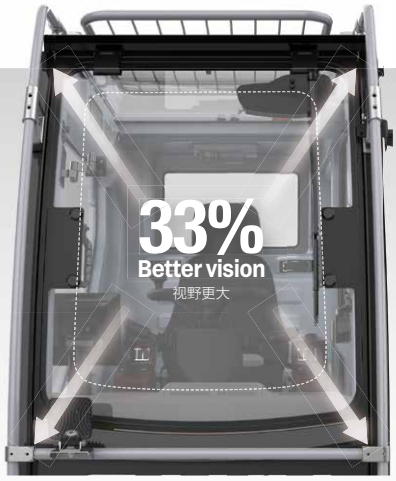

Integrating SUV genes, overall space is enlarged by 10% and forward field of vision is increased by 33%. The front windshield can be opened by 70 degrees, providing better ventilation and a second emergency exit.

融入 SUV 基因，整体空间增大 10%，配备超大可开合 70° 前挡风玻璃，视野提升 33%，增加空气对流，并可作为快速逃生通道。

Sliding door transits between tracks when closing to make perfect thermal and acoustical insulation.
侧向变轨滑移门完美隔绝外部环境。

Getting in and out is made more convenient with the power sliding side step.
全宽电动伸缩踏板，超大安全便利进出通道。

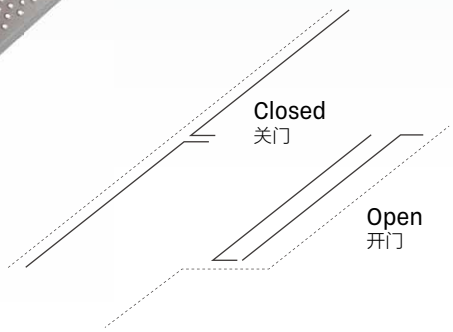

Adjustable steering wheel for driving and controlling, modular control panels, and smart user interface deliver intuitive and highly efficient control.

驾控一体的方向盘、模块化控制面板、UI 智能操作界面，操作简单，为高效吊装保驾护航。

Convenient Transport
行驶运输便捷性

Four steering modes
四种转向模型

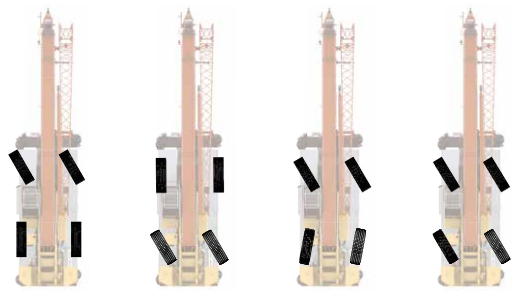

2 wheel front 前轮转向模式
2 wheel rear 后轮转向模式
4 wheel 四轮转向模式
Crab 蟹行模式

Steering control panel
转向控制面板

One-Trailer Transport
一车整运

The basic machine is transported at 32.3t with counterweight, jib and hooks, 2.98m wide and 3.73m high, satisfying road regulations.

主机运输尺寸为宽 2.98m，高 3.73m，重量为 32.3t（带配重、副臂和吊钩），满足道路运输要求。

Axle Load Distribution
轴荷分布

Axle 轴	1	2	Gross weight 总重量
Axle load 轴荷 /kg	16100	16200	32300
Remark 备注	Boom angle 0° , with full water and fuel reservoirs, main hook, aux hook， one driver. 起重臂角度 0° 、满水、满油、主钩、副钩吊臂头，驾驶员 1 人		

Carrier Frame
车架底盘

Inverted trapezoidal variable cross section frame is 5% less in weight and 10% stronger in rigidity.

倒梯形变截面车架，实现车架减重 5% 的同时，刚性提升 10%。

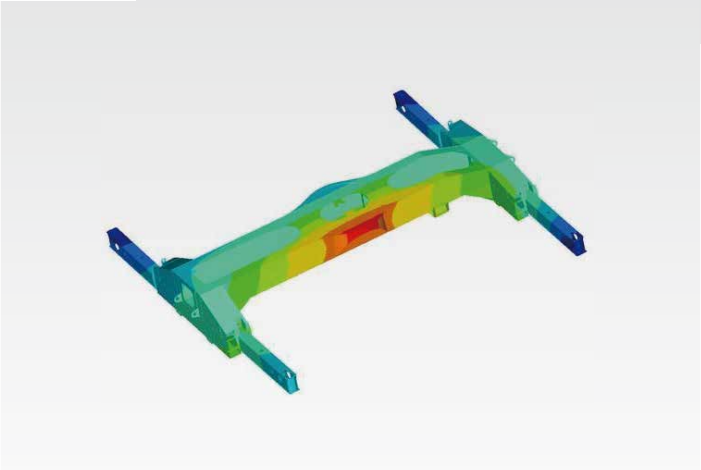

5%
Weight 重量

10%
Rigidity 刚性

Power Train
动力系统

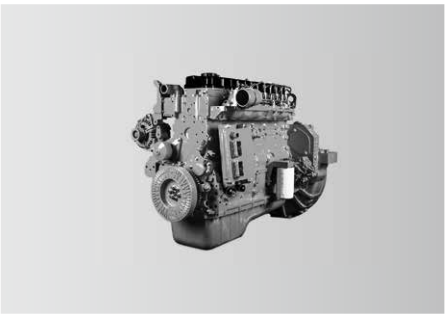

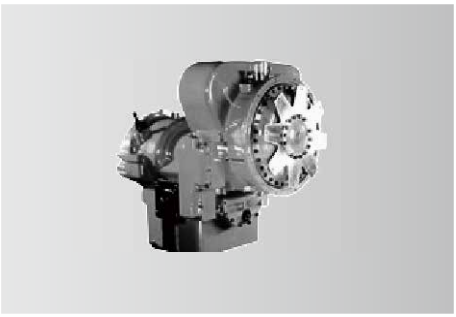

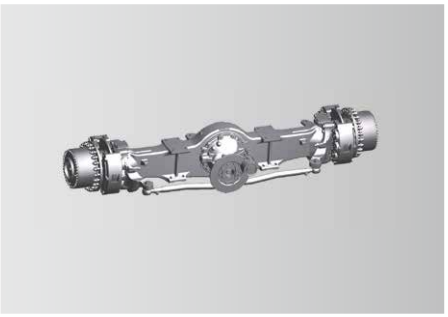

Engine
Power comes from a DF Cummins QSB6.7 inline six-cylinder water-cooled, turbocharged and intercooled off-highway diesel engine, complying with Stage III emission standard.
Rated power: 194kW/2400rpm
Max. torque: 990N·m/1500rpm

发动机
东风康明斯 QSB6.7 三阶段非道路直列六缸水冷、增压中冷柴油发动机
额定功率 :194kW/2400rpm
最大扭矩 :990N·m/1500rpm

Transmission
Dana electronically controlled auto transmission features 6 speeds forward and 3 speeds reverse, wide ratio range, and smooth gearshift with reduced maintenance cost.

变速箱
德纳全自动电控变速箱，6 个前进挡 3 个后退挡，速比范围大，换挡平顺无冲击，维修保养成本低。

Axle and suspension
Meritor axles, both axles are driven and steered. Front axle is mounted to the frame by independent steel plate, and rear adopts oscillation cylinders with hydraulic lockout. Driving comfort and lateral stability is therefore guaranteed on rough terrains and conditions.

车桥悬挂
美驰车桥，前后桥均为驱动桥和转向桥。前桥采用独立式钢板连接，后桥采用摆动支架式，液压油缸闭锁悬架系统；能适用各种恶劣工况和路面，保证车辆行驶的平顺性和侧翻稳定性，驾驶舒适。

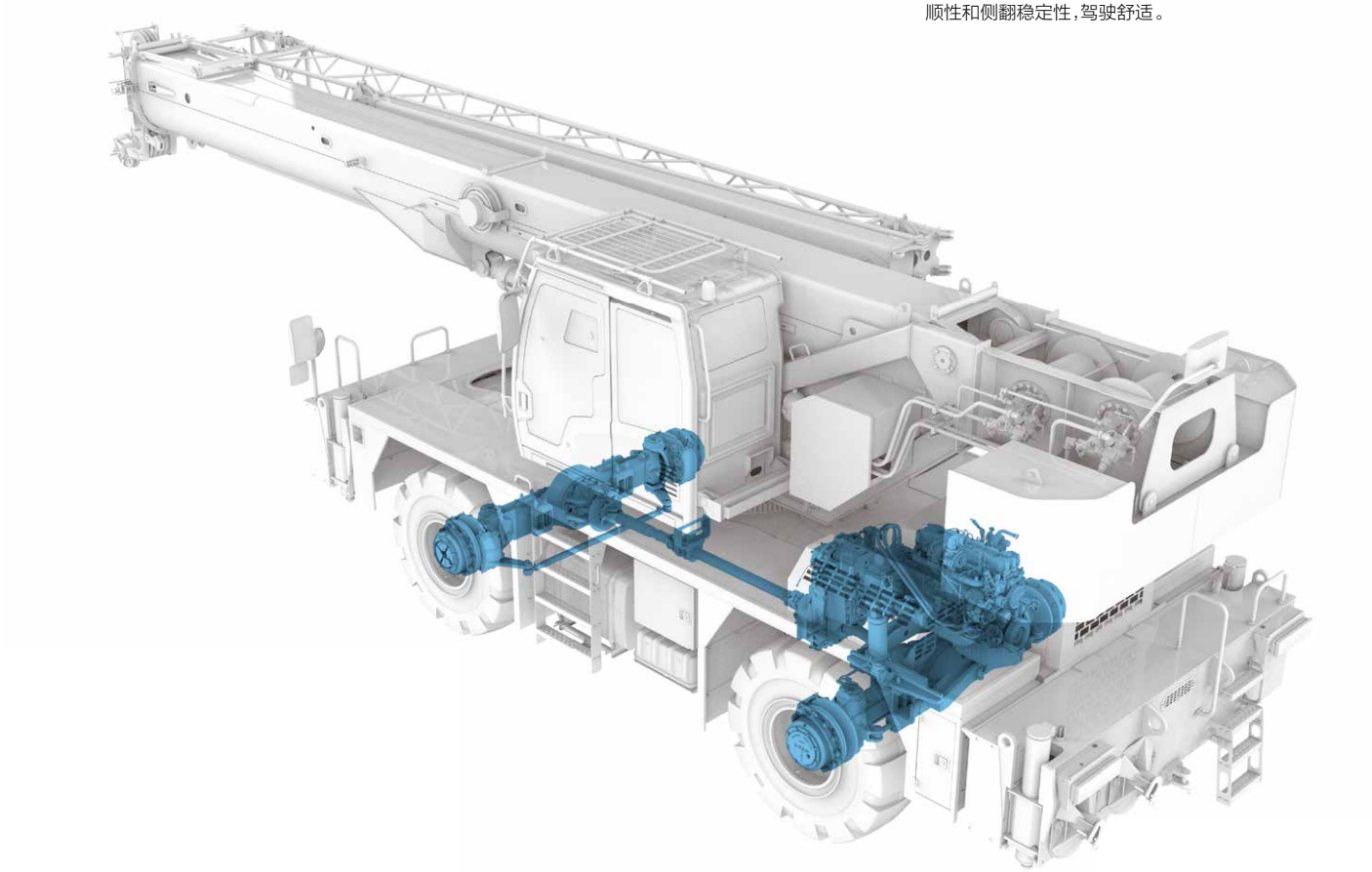

Electrical System
电气系统

Smart CAN-BUS communication system
International advanced CAN-BUS data communication network applied for display, instrument panel, I/O module, joysticks and main sensors, allowing for high-speed data transmission and quick response in less than 20ms.

Cabling
Centralized electric cabinet and heavy-duty connector applied for cabling of superstructure, convenient for maintenance; IP67 protection rating, ensuring high reliability.

Winch camera (optional)
Winch cameras equipped for monitoring its working condition and identifying rope disorder in time.

Integrated bus button panel input
Various operating states displayed by button indicator lights, and one-button multi-functional operation realizable by writing various operation modes.

智能总线通信系统
国际先进的分布式集成总线数据通信网络，
显示器、显示仪表、I/O 模块、操作手柄、主要传感器等采用 CAN 总线组网，高速信息传输、响应速度小于 20ms。

线束布线
上车线束采用采用集中式分线盒及重载接插件，维护方便，防护等级 IP67，可靠性高。

卷扬监控系统（选配）
卷扬摄像头实时监控工作状态，能及时发现乱绳情况。

集成总线按键面板输入
可通过按键指示灯显示各种工作状态，通过写入多种操作模式实现一键多功能。

Centralized electric cabinet
集中式电控箱

Anti-two-block switch
高度限位器

Third wrap indicator
三圈保护器

Cable reel
电缆卷筒

Anemometer (Optional)
风速仪（选配）

Multi-functional screen
Large 10.1 inch HD touch screen display with all new interface. Incorporated crane setup, load charts, working conditions, working period, virtual wall, radio and diagnostics with an additional navigation knob.

Precise load moment indicator
SANY independently developed LMI, accuracy of 0 ~ 5%.

高新多功能显示屏
采用 10.1 寸高清显示屏，全新操作界面，可实现触摸与旋钮多方式操控。
工况、力矩、发动机、变速箱、控制器 IO 点、工作时间统计等丰富的设备状态信息呈现，集成虚拟墙、收音机等多种扩展功能。

精准力限器系统
三一自主研制的力矩限制器系统，精度达 0~5%。

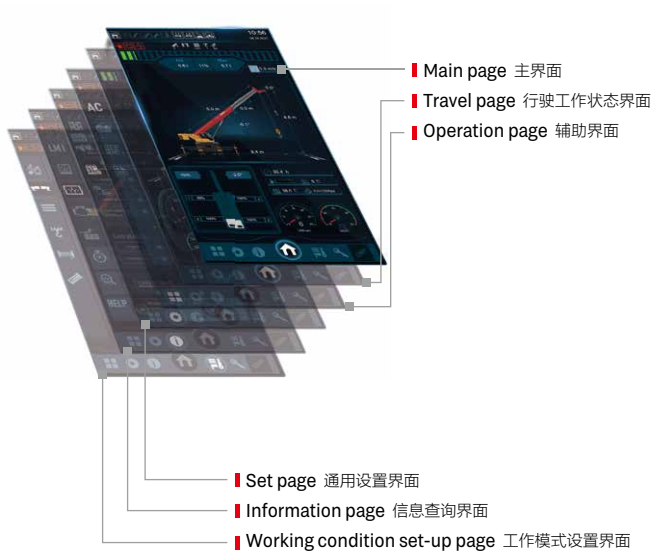

MachineLink+

ROOTCLOUD T-AMS Pro device comes as standard to realize GPS trajectory, machine status, maintenance management, E-fence, alarm management, and operator management on computer or mobile MachineLink+ platform, by remote control of cranes. This telematics package greatly boosts efficiency of customer fleet management and helps provide better after-sales services.

标配树根物联终端 T-AMS Pro，通过对起重机设备的远程控制，在电脑或移动端 MachineLink+ 平台实现轨迹回放、设备状态、维保设备、电子围栏、报警管理、操作手管理等功能，极大提高客户设备管理效率，提升三一售后服务能力。

- Fleet status 设备状态
- Cautions & Alerts 报警管理
- Fleet tracking 轨迹回放
- Maintenance Assistant 维保小助手

- Location & E-fence 定位及电子围栏
- Work report 宏观报表
- Fuel usage 油耗
- Operator management 操作手管理

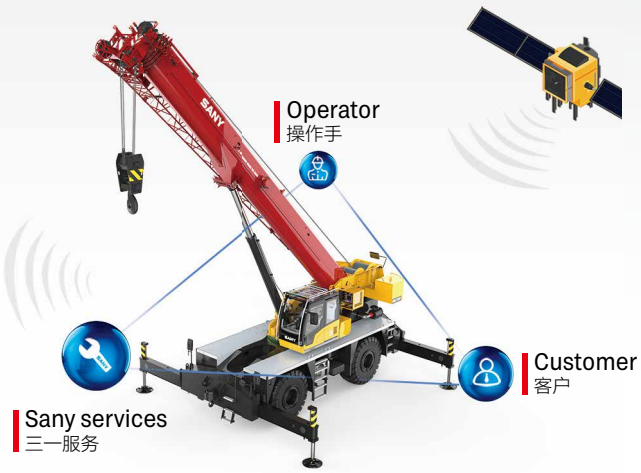

Hydraulic System
液压系统

Four section boom extended by single cylinder with rope arranger. Synchronized telescoping of variable lengths for more applications with higher efficiency.

4 节主臂，单缸绳排，可实现同步伸缩，臂长任意组合，省时省力。

Telescoping mode
伸缩模式

Superstructure
上车

Open-type electronically controlled load-sensing system.
Electro proportional compensated passive luffing-down system applied to control the luffing speed, making luffing more reliable and stable.
360° slewing in both directions, precise control of slewing speed.
Electronically controlled load-sensing hydraulic system, electronic joystick and electronic throttle, ensuring easy operation and more accurate control and millisecond-level action response speed, with min. single-rope hoisting speed 0.8m/min, and distribution difference in case of combined motions 8%.

开式电控负载敏感系统。
电比例自重落幅系统控制落幅速度，更可靠更平稳。
具备 360° 回转功能，并可实现速度精准控制。
电控负载敏感液压系统，采用电手柄、电油门控制，轻松操作的同时，控制更精准；动作响应毫秒级速度；卷扬单绳最低速度 0.8m/min；复合动作分配误差 8%。

Chassis
下车

Steering system
A gear pump installed to supply oil for hydraulic steering, steering pressure controlled by electro-proportional relief valve, four steering modes realized by solenoid directional valve.
Suspension system
Different modes including normal driving and Pick & Carry with suspension locked, suspension to be locked when the crane is working.
Outrigger telescoping system
The electro proportional relief valve identifies pressure staging of outrigger telescoping, satisfying operation requirements under high pressure and forming protection under limited pressure.

转向系统
液压转向系统采用齿轮泵提供油源，通过电比例溢流阀精确控制转向压力，通过电磁换向阀实现前轮转向，后轮转向，全轮转向和蟹行转向共计四种转向模式。
悬挂系统
悬挂系统通过选择不同的悬挂模式可以实现正常行驶和锁定模式下的带载行驶；在起重机上车作业时能够对悬挂进行锁定。
支腿伸缩系统
支腿伸缩采用电比例溢流阀对支腿伸缩进行压力分级，既满足高压力动作需求，也可满足限压保护功能。

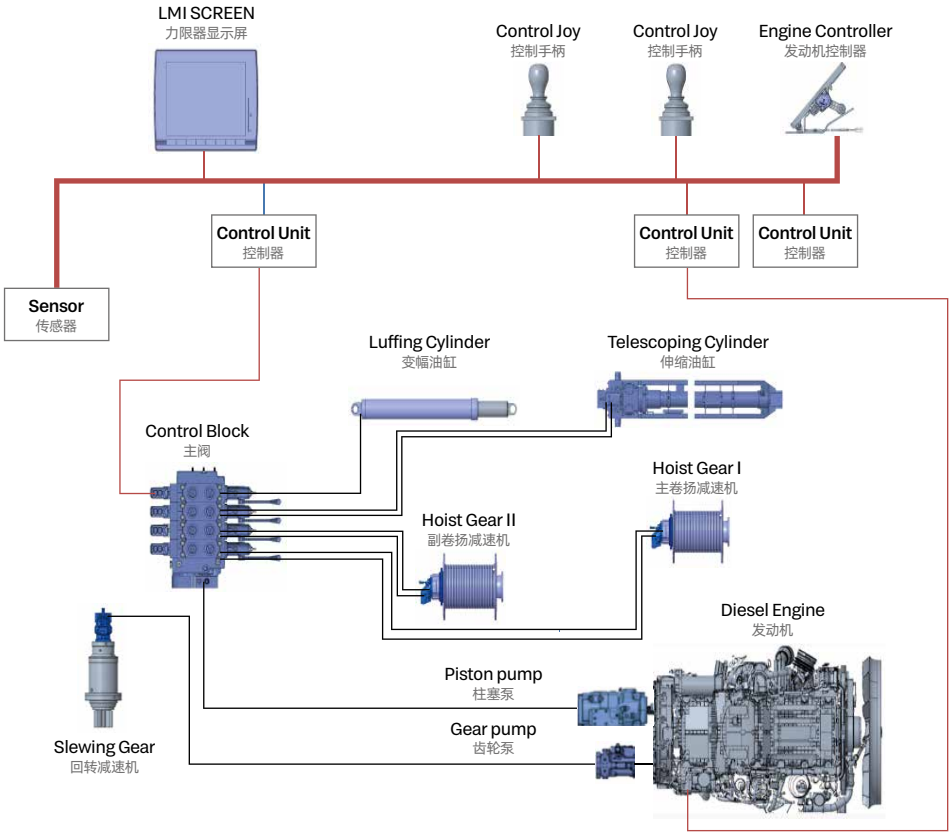

Overall Dimensions
整机尺寸

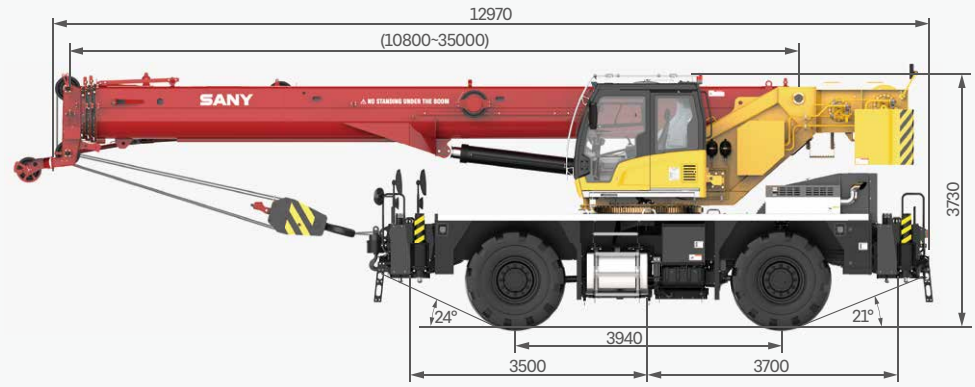

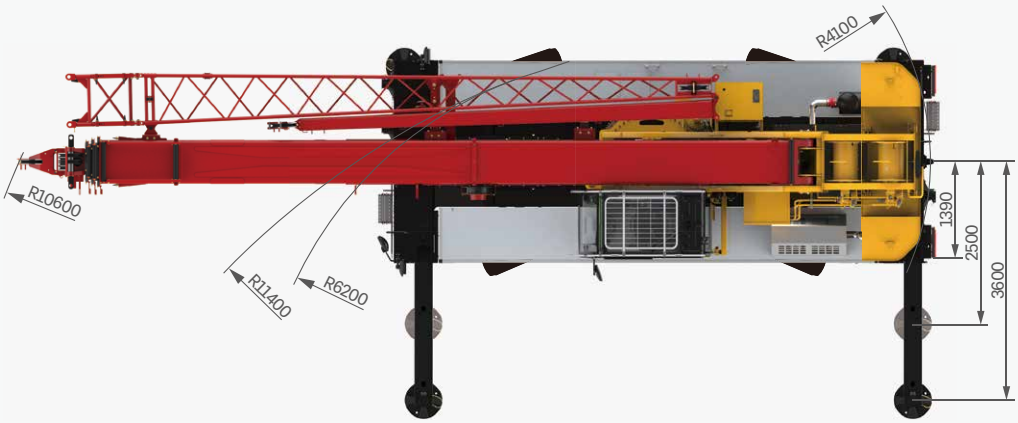

Technical Specification
整机参数

CATEGORY 类型	ITEM 项目		UNIT 单位	VALUE 参数
CAPACITY 额定起重量	Max. lifting capacity 最大起重量		t	40
WEIGHT 重量参数	Gross weight 整机总质量		kg	32300
POWER 发动机参数	Engine model 发动机型号		-	QSB6.7 (EU Stage III)
	Max. engine power 发动机最大功率		kW/rpm	194/2400
	Max. engine torque 发动机最大输出扭矩		N·m/rpm	990/1500
DIMENSIONS 尺寸参数	Overall length 整机全长		mm	12970
	Overall width 整机全宽		mm	2980
	Overall height 整机全高		mm	3730
TRAVEL 行驶参数	Max. travel speed 最高行驶速度		km/h	41
	Steering radius 转弯半径	Min.steering radius 最小转弯半径	m	6.2
		Min.steering radius of boom tip 臂头最小转弯半径	m	10.6
	Wheel formula 车轮模式		-	4×2; 4×4
	Min.ground clearance 最小离地间隙		mm	370
	Approach angle 接近角		°	24
	Departure angle 离去角		°	21
	Max.gradeability 最大爬坡度		-	83%
MAIN PERFORMANCE 主要性能参数	Working temperature range 使用温度区间		℃	-20~+51
	Min.rated lifting radius 最小额定幅度		m	3
	Tail slewing radius 转台尾部回转半径		m	4.1
	Boom sections (Qty.) 臂节数		-	4
	Boom shape 臂形状		-	U shape U 型
	Max.lifting moment 最大起重力矩	Basic boom 基本臂	kN·m	1421
		Full-extension boom 全伸主臂	kN·m	882
	Boom length 臂长	Basic boom 基本臂	m	10.8
		Full-extension boom 全伸主臂	m	35
		Full-extension boom + jib 全伸主臂 + 副臂	m	51
	Max.lifting height 最大起重高度	Basic boom 基本臂	m	11.5
		Full-extension boom 全伸主臂	m	35.3
		Full-extension boom + jib 全伸主臂 + 副臂	m	51.5
	Outrigger span (Longitudinal × Transverse) 支腿跨距（纵 × 横）		m	7.2×7.2
	Jib offset 副臂安装角度		°	0, 15, 30
AIRCONDITIONER 空调	In operator's cab 上车空调		-	Heating & cooling 制冷、制热

Technical Specification
整机参数

Hook 吊钩

Rated load 额载 /t	Number of sheaves 滑轮数量	Rope rate 倍率	Hook weight/kg 吊钩重量
40	4	8	320
5	-	1	85

Operations 主要动作参数

Item 项目		Max.single rope lifting speed (empty load) 单绳速度（空载）	Rope diameter/length 钢丝绳直径 / 长度	Max. single line pull 最大单绳拉力
Main winch 主卷扬		141m/min	Φ16mm/165m	5.6t
Auxiliary winch 副卷扬		135m/min	Φ16mm/110m	5.6t
Slewing speed 回转速度		(0~2.8) r/min		
Full luffing up/down time of boom 主臂起落幅时间		40s/47s		
Full extension/retraction time of boom 主臂伸缩时间		41s/40s		
Outrigger jack 垂直支腿	Extension 伸	25s		
	Retraction 缩	20s		
Outrigger beam 水平支腿	Extension 伸	22s		
	Retraction 缩	12s		

Crane Introduction
整机介绍

Carrier frame 车架

- Double longitudinal beam construction welded by high strength steel plate, higher bearing capacity.
- 车架为高强钢板焊接而成的双纵梁结构，承载能力强。

Engine 发动机

- Model: DF Cummins QSB6.7 inline six-cylinder diesel engine with watercooler and inter cooler.
- Rate power: 194kW/2400rpm.
- Emission standard: EU Stage III.
- Fuel reservoir capacity:350L.
- 型号：东风康明斯 QSB6.7 直列六缸、水冷却、增压中冷、柴油发动机。
- 额定功率：194kw/2400rpm。
- 排放标准：符合 III 阶段。
- 油箱容积：350L。

Transmission 变速箱

- Auto-transmission, 6 forward gears and 3 reverse gears, large speed ratio range, adaptable to slope climbing and high-speed traveling.
- 自动变速箱，变速箱有 6 个前进档、3 个后退挡，速比范围大，即可满足低速场地爬坡行驶又可满足高速行驶。

Axle 车桥

- Two axle chassis of flexible maneuverability, four-wheel drive, excellent dynamic performance.
- 操控灵活，底盘两桥设计，前、后桥驱动，动力性能好。

Suspension system 悬挂

- The front is rigidly mounted, and the rear axle adopts pivot oscillation suspension with hydraulic lockout.
- 前桥刚性连接，后桥带油缸锁定枢轴摆动悬挂。

Battery 电池系统

- Two packs of 12V, 120Ah batteries.
- 2 块 12V、120Ah 电池。

Tires 轮胎

- Large diameter off-road 20.5-25 tires deliver large ground clearance and strong off-road agility.
- 大直径越野轮胎，离地间距大，越野性能强，轮胎型号 20.5-25。

Brake 制动系统

- Dual circuit braking system. When one circuit fails, the other can still work normally, improving the safety and reliability of the braking system.
- 双回路制动系统，当某一回路出现故障时，另一回路仍能正常工作，提高制动系统的安全性和可靠性。

Hydraulics 液压系统

- Adopt stable and high-quality main oil pump, enhancing system reliability. Precise parameter matching contributes to superior controllability of the vehicle.
- Hydraulic fluid reservoir: 405L.
- 采用稳定、高品质的主油泵，系统可靠性高；通过精确的参数匹配，操控性能优越。
- 液压油箱容积：405L。

Outrigger 支腿

- H-type telescoping outrigger, 4-point support, with span (longitudinal × transverse) 7.2m × 7.2m.
- 采用 H 形伸缩支腿，4 点支撑，纵、横跨距 7.2m × 7.2m。

Control system 控制系统

- CAN-BUS: The bus instrument of integrated intelligent control electrical system can display driving parameters at any time, making driving easier. At the same time, engine failure prompt]makes the maintenance and troubleshooting more convenient and faster.
- All-round safety protection, the main and auxiliary hoists are equipped with three-circle indicators and A2B switches to prevent over-hoist-down and over winding of the wire ropes.
- Load moment indicator: It adopts highly intelligent moment indicator system to fully protect lifting operation and ensure accuracy, stability and comfort.
- 总线仪表：采用集成一体智能控制电气系统的总线仪表，可随时掌控行驾参数，驾乘轻松；同时拥有发动机故障提示功能，维修排故方便、快捷。
- 全方位的安全保护系统，主、副卷扬配置三圈保护器和高度限位器，防止钢丝绳过放和过卷，防倾翻保护，极限角度保护。
- 力限器：采用高度智能力矩限制器系统，全方位保护吊载作业，确保操作精准、平稳、舒适。

Crane Introduction
整机介绍

Operator's cab 操纵室

- New generation T-series operator's cab features curved-rail sliding door, safety glass and corrosion resistant steel construction with softened interior trim. Large internal space with panoramic skylight, adjustable seat and other user-friendly design incl. A/C, electric wiper, making it more comfortable and easier to work. The LMI screen is equipped to realize the logic integration of the control console and the display, so that all working data can be seen at a glance.
- 全新一代 T 系列操纵室，带变轨滑移门，配备安全玻璃，耐腐蚀钢板，配置软化内饰、超大内部空间、可调式座椅等人性化设计，配有空调、电动雨刮器，操作更舒适、轻松；配置力矩限制器显示屏，实现主控台与操作显示系统有机结合，使吊装作业的全部工况数据一目了然。

Boom system 臂架系统

- Boom: Four-section, basic boom 10.8m, full-extension 35m, made of high-strength welded structural steel with U-shape cross-section.
- Jib: Two-section, 9.2m / 16m, offset at 0°, 15°, 30°.
- 主臂：四节臂，基本臂 10.8m，全伸臂 35m，由高强度焊接结构钢制成，U 形截面。
- 副臂：两节副臂，分别为 9.2m 和 16m，安装角度为 0° 15° 30° 。

Slewing platform 转台结构

- SANY independently developed, made of fine grain high strength steel in optimized structure.
- 三一自主设计，结构更优化，由细晶粒高强钢制成。

Hydraulics 液压系统

- Load sensing variable piston pump can adjust displacement in real time to achieve high precision flow control, greatly reducing energy loss.
- Winch adopts electronically controlled fixed displacement motor with high operation efficiency. Max. single rope speed of main and auxiliary winch are 141m/min, 135m/min, respectively.
- Slewing system integrating slewing buffer and free swing technology, start & brake process is smoother and the inching motion performance is ever better.
- 采用负载敏感变量柱塞泵，能实时调节油泵排量，实现高精度的流量控制，极大的降低能量损耗。
- 卷扬采用电控定量马达，作业效率高；主、副卷扬单绳速度最大达141m/min、135m/min。
- 回转系统带集成回转缓冲阀，具有自由滑转功能，回转启动和控制平稳，微动性卓越。

Hoist 起升机构

- Pump and motor are applied, highly efficient and energy saving. Balance valve and unique anti-hook-slip technology are perfectly coupled to achieve smooth rise and fall of the load. Non-rotation high strength wire rope is used.
- 泵、马达高效节能。卷扬平衡阀与独特的防溜钩技术完美结合，重物起落平稳。配备防旋转高强度钢丝绳。

Luffing system 变幅系统

- Double acting single rod hydraulic cylinder with balance valve, luffing angle: -2°~ 80°. Passive luffing down, reducing energy consumption, improving luffing stability.
- 双作用单活塞杆液压缸，带安全平衡阀，变幅角度：-2°~80°，采用自重落幅系统，降低能耗，提高落幅操作的平稳性。

Slewing 回转系统

- 360° slewing in both directions, max. speed 2.8r/min. It adopts electro proportional speed control for stable movement and system reliability. The unique slewing balance design makes the braking smoother.
- 360° 转动，最大回转速度 2.8r/min。电控比例调速控制，动作稳定，系统可靠。独特的回转缓冲设计，制动更平稳。

Counterweight 配重

- Fixed block 4.5t.
- 固定配重 4.5t。

Safety equipment 安全装置

- Load moment indicator: Analytical mechanics is applied and moment limiter calculation system based on the hoisting mechanics model is established. Through online empty-load calibration, the rated accuracy can reach 0~5% to fully protect the hoisting operation. In case of overload, the system will automatically give an alarm to guarantee safety operation.
- The hydraulic system includes balance valve, relief valve, two-way holding valve, etc. to realize system stability and reliability.
- The main and auxiliary winches are equipped with third-wrap indicators to prevent over-hoist-down of the wire rope.
- Boom head and jib head are equipped with A2B switches to prevent the wire rope from over winding.
- The length & angle sensor and pressure sensor are equipped to signify working status in real time, automatically stopping hazardous actions with buzzer alarm.
- 力矩限制器：采用分析力学方法，建立了基于吊重力学模型的力矩限制器计算系统，通过在线空载标定，额定吊重精度达到 0~5%，全方位保护吊载作业；超载作业时，系统自动报警提示，为操纵作业提供安全保障。
- 液压系统配置平衡阀、溢流阀、双向液压锁等元件，实现液压系统稳定可靠。
- 主、副卷扬配置三圈保护器，防止钢丝绳过放。
- 主、副臂臂端配置高度限位器，防止钢丝绳过卷。
- 配置长度角度传感器、压力传感器，实时显示起重机作业状态，自动切断危险动作，蜂鸣报警。

Optional equipment at extra fees 选配

- Cooling A/C / Anemometer / Boom tip camera / Winch camera / Reversing camera / Data recorder / Spark arrester / Air intake shutoff valve / Reversing radar / Specialized tires for desert traveling.
- Other equipment available upon request.
- 单冷空调 / 风速仪 / 臂尖摄像头 / 卷扬摄像头 / 倒车摄像头 / 数据记录仪 / 火星灭火器 / 发动机进气关断阀 / 倒车雷达 / 沙漠胎。
- 其他选配视需求定。

Working Conditions
工况组合

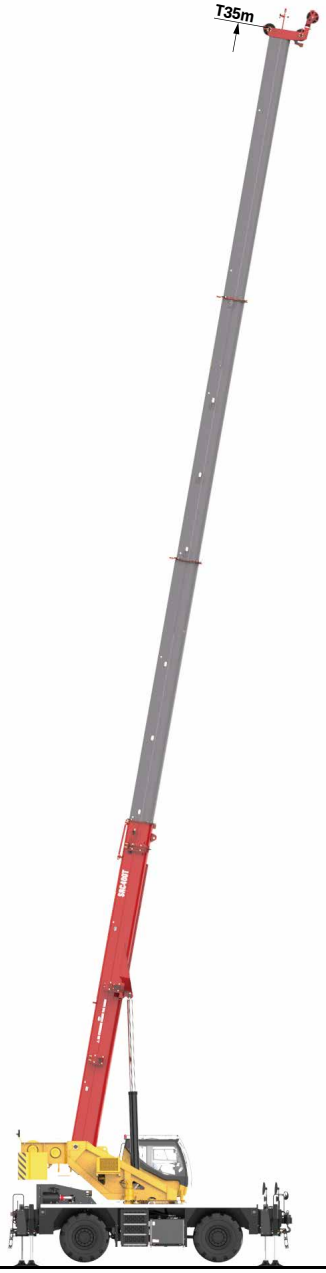

Telescopic boom on outriggers
主臂、支腿吊载

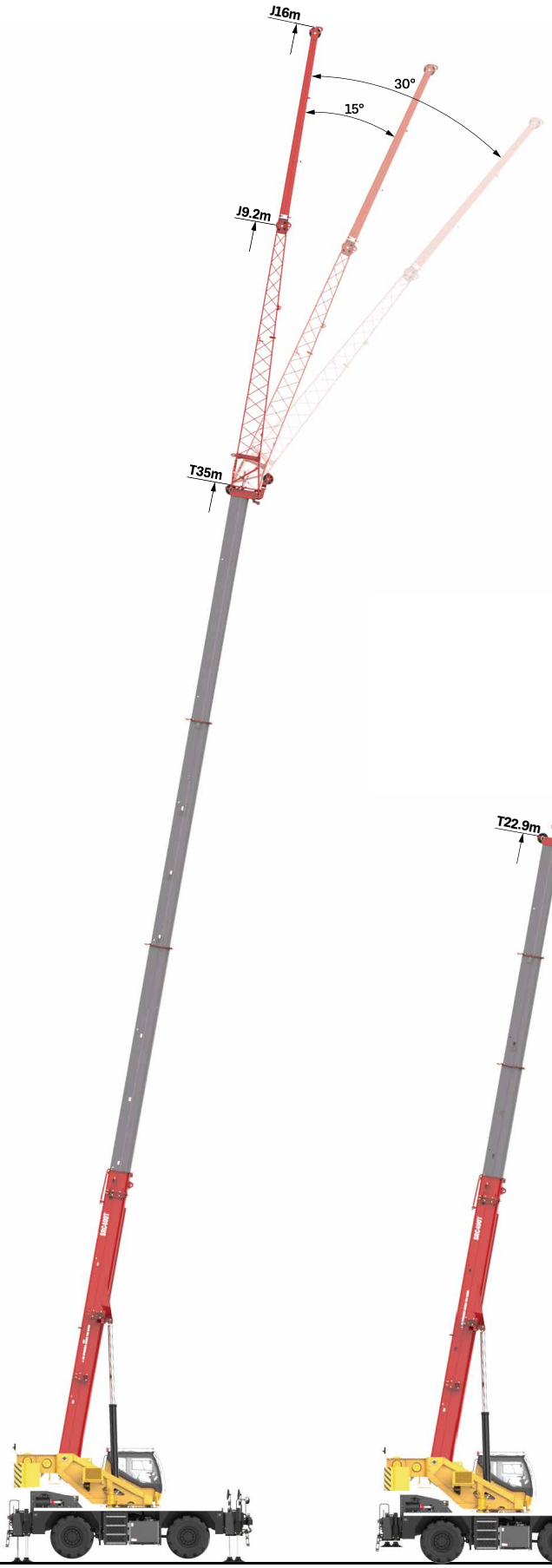

Fixed jib on outriggers
固定副臂、支腿吊载

Telescopic boom on tires
主臂、轮胎吊载

Operating Range - Telescopic Boom, On 100% Outriggers

起升高度曲线 - 主臂，全伸支腿

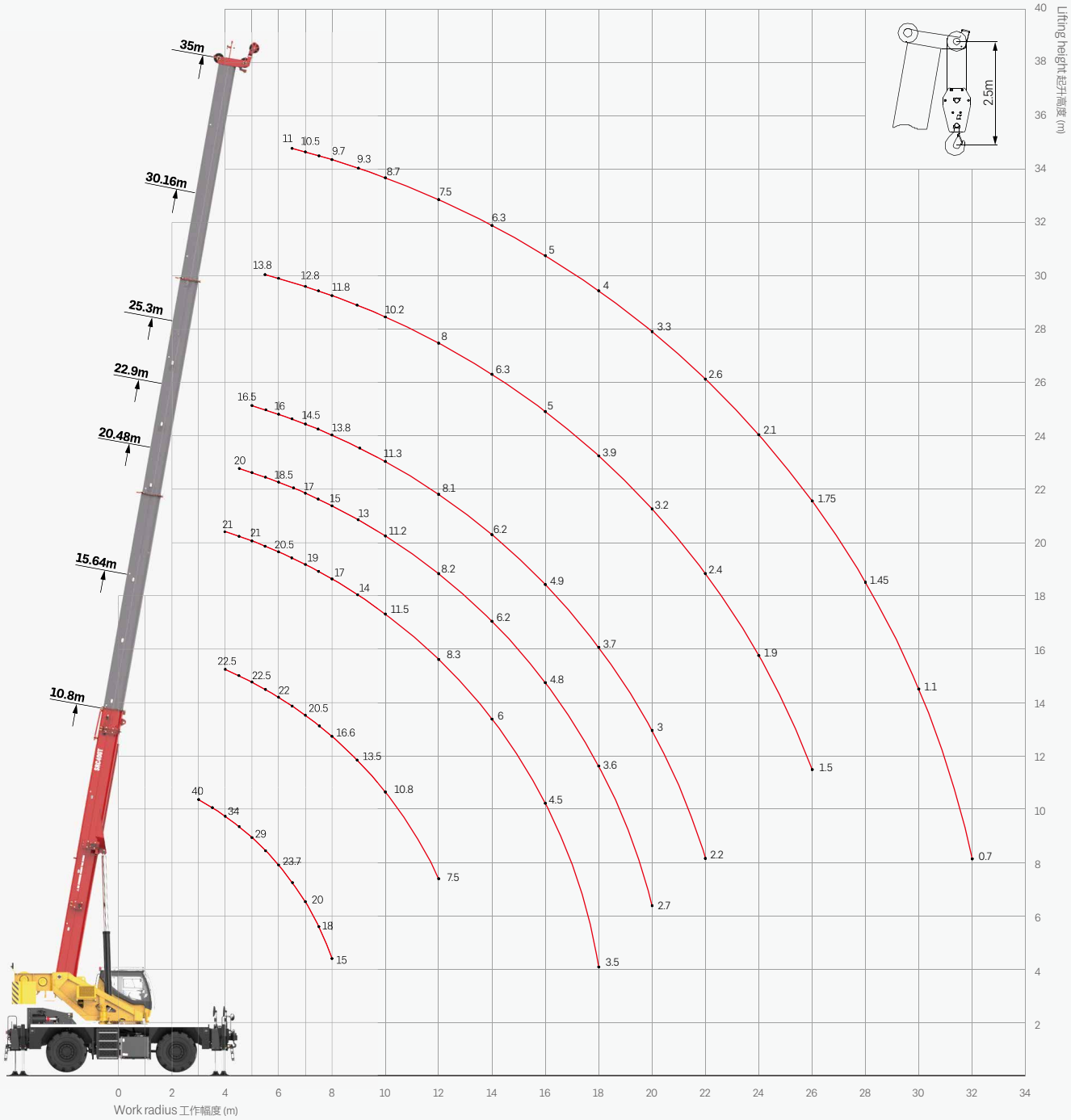

Load Chart-Telescopic Boom

性能表 - 主臂

Unit: kg

Radius (m) 幅度	10.8	15.6	20.5	22.9	25.3	30.2	35.0	Radius (m) 幅度
3.0	40000*							3.0
3.5	36000							3.5
4.0	34000	22500	21000					4.0
4.5	31500	22500	21000	20000				4.5
5.0	29000	22500	21000	19500	16500			5.0
5.5	26000	22500	21000	19000	16200	13800		5.5
6.0	23700	22000	20500	18500	16000	13500		6.0
6.5	21600	21300	20000	18000	15200	13100	11000	6.5
7.0	20000	20500	19000	17000	14500	12800	10500	7.0
7.5	18000	18300	18000	16000	14100	12500	10000	7.5
8.0	15000	16600	17000	15000	13800	11800	9700	8.0
9.0		13500	14000	13000	12800	11000	9300	9.0
10.0		10800	11500	11200	11300	10200	8700	10.0
12.0		7500	8300	8200	8100	8000	7500	12.0
14.0			6000	6200	6200	6300	6300	14.0
16.0			4500	4800	4900	5000	5000	16.0
18.0			3500	3600	3700	3900	4000	18.0
20.0				2700	3000	3200	3300	20.0
22.0					2200	2400	2600	22.0
24.0						1900	2100	24.0
26.0						1500	1750	26.0
28.0							1450	28.0
30.0							1100	30.0
32.0							700	32.0
Telescoping status (%) 伸缩模式								
2nd/3rd/Top boom 二 / 三 / 四节臂	0	20	40	50	60	80	100	2nd/3rd/Top boom 二 / 三 / 四节臂
Rope rate 钢丝绳倍率	8	6	6	5	4	4	3	Rope rate 钢丝绳倍率
Min. angle (°) 最小角度	0	0	0	0	0	0	0	Min. angle (°) 最小角度
Load at min. angle 最小角度吊重	12000	5800	3200	2700	2000	1200	600	Load at min. angle 最小角度吊重

* With attachment sheave at 10 parts of line when the lifting capacity is over 40000kg.
* 当吊载超过 40000kg 时，使用辅助滑轮配 10 倍率。

Load Chart-Telescopic Boom

性能表 - 主臂

Unit: kg

Radius (m) 幅度	10.8	15.6	20.5	22.9	25.3	30.2	35.0	Radius (m) 幅度
3.0	37000							3.0
3.5	34000							3.5
4.0	30000	20500	19000					4.0
4.5	27000	20500	19000	18000				4.5
5.0	22000	20500	19000	17500	14500			5.0
5.5	18000	18000	17500	17000	14000	12000		5.5
6.0	15500	16000	16000	15800	13500	11500		6.0
6.5	13000	13800	14000	14000	13000	11000	9500	6.5
7.0	11500	11800	11800	12000	12000	10500	9000	7.0
7.5	9500	10400	10300	10500	10500	10000	8500	7.5
8.0	8500	9200	9200	9400	9500	9500	8000	8.0
9.0		7500	7500	7600	7700	7800	7500	9.0
10.0		6200	6200	6300	6400	6500	6400	10.0
12.0		4400	4500	4600	4700	4800	4700	12.0
14.0			3300	3400	3500	3600	3500	14.0
16.0			2500	2600	2700	2700	2600	16.0
18.0			1900	2000	2100	2100	2100	18.0
20.0				1500	1600	1600	1600	20.0
22.0					1000	1100	1200	22.0
24.0						800	900	24.0
Telescoping status (%) 伸缩模式								
2nd/3rd/Top boom 二 / 三 / 四节臂	0	20	40	50	60	80	100	2nd/3rd/Top boom 二 / 三 / 四节臂
Rope rate 钢丝绳倍率	8	6	5	5	4	4	3	Rope rate 钢丝绳倍率
Min. angle (°) 最小角度	0	0	0	0	0	30	40	Min. angle (°) 最小角度
Load at min. angle 最小角度吊重	6500	3000	1300	800	600	600	600	Load at min. angle 最小角度吊重

Load Chart-Telescopic Boom

性能表 - 主臂

Radius (m) 幅度	10.8	15.6	20.5	22.9	25.3	30.2	35.0	Radius (m) 幅度
3.0	25500							3.0
3.5	18800	18000						3.5
4.0	14700	14500	14500					4.0
4.5	11800	12000	12200	12500				4.5
5.0	9600	9900	10200	10300	10400			5.0
5.5	8200	8600	8700	8800	8900	9000		5.5
6.0	7000	7500	7700	7800	7900	8000		6.0
6.5	6000	6400	6650	6700	6750	6800	7000	6.5
7.0	5200	5400	5700	5800	5850	5900	6000	7.0
7.5	4200	4700	4900	5150	5200	5250	5300	7.5
8.0	3500	4100	4450	4550	4600	4650	4700	8.0
9.0		3200	3550	3700	3750	3800	3850	9.0
10.0		2600	2700	2800	2950	3000	3100	10.0
12.0		1600	1900	2000	2000	2100	2100	12.0
14.0			1250	1300	1300	1350	1400	14.0
16.0			700	800	850	850	900	16.0
Telescoping status (%) 伸缩模式								
2nd/3rd/Top boom 二 / 三 / 四节臂	0	20	40	50	60	80	100	2nd/3rd/Top boom 二 / 三 / 四节臂
Rope rate 钢丝绳倍率	6	6	4	4	4	4	3	Rope rate 钢丝绳倍率
Min. angle (°) 最小角度	0	0	28	38	44	53	58	Min. angle (°) 最小角度
Load at min. angle 最小角度吊重	2500	800	600	600	600	600	600	Load at min. angle 最小角度吊重

Remark
1. Load capacity in the chart is the maximum weight which this crane could hoist include the weight of hook blocks and riggings. The main hook weighs 320kg, the aux. hook weighs 85kg.
2. Radius shown in the chart is the actual radius when loading.
3. The load capacity in the chart is the maximum weight when this crane is supported with the firm ground and stays in level.
4. Choose rated load capacity of the longer boom and radius when the actual boom length and radius are between two values in the charts.
5. The machine can be used only when the wind power is less than grade 6.

1. 性能表中额定起重量包括起重钩 (主钩重 320kg，副钩重 85kg) 和吊具的重量。
2. 性能表中工作幅度是指吊载后的实际幅度。
3. 性能表中给定数值是在平整坚固的地面上，整机调平状态下起重机的最大起重量。
4. 如实际臂长和幅度介于两个数值之间时，取较长的臂长及较大的幅度所决定的额定起重量进行起重作业。
5. 起重作业风力等级需低于 6 级。

Operating Range - Fixed Jib
起升高度曲线 - 副臂

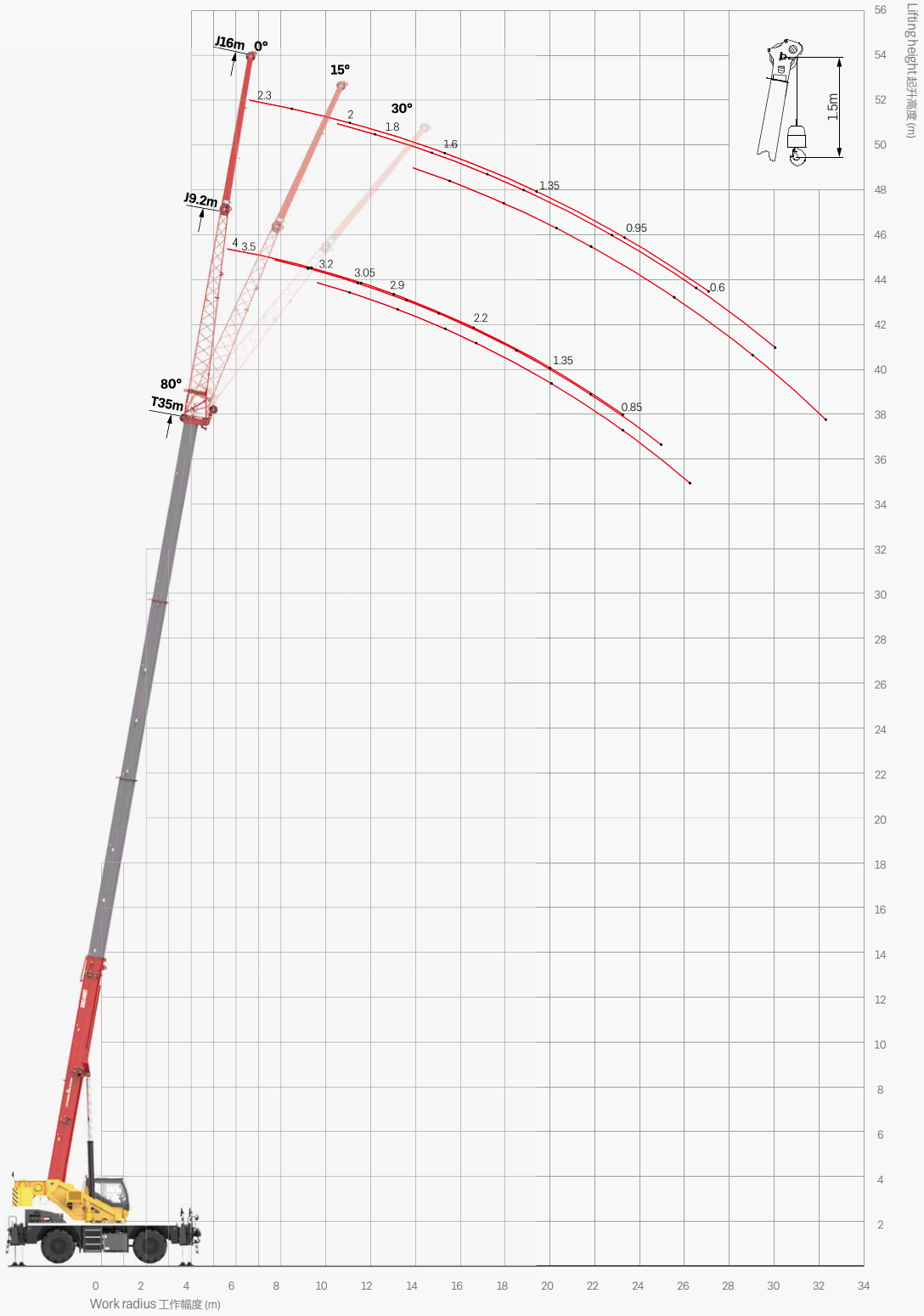

Load Chart - Fixed Jib

性能表 - 副臂

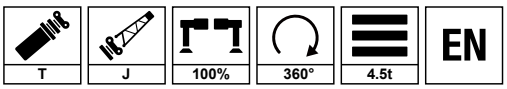

Unit: kg

Boom angle 主臂仰角 (°)	35m+9.2m			35m+16m			Boom angle 主臂仰角 (°)
	0°	15°	30°	0°	15°	30°	
80	4000	2900	2300	2300	1400	1000	80
78	3500	2800	2200	2200	1350	950	78
75	3200	2500	2000	2000	1200	900	75
72	3050	2200	1850	1800	1100	840	72
70	2900	2000	1800	1600	1000	800	70
65	2200	1600	1550	1350	900	720	65
60	1350	1100	950	950	750	670	60
55	850	750	650	600	500		55
Min. angle (°) 最小角度	53	53	53	53	53	58	Min. angle (°) 最小角度
Load at min. angle 最小角度吊重	500	400	300	400	300	300	Load at min. angle 最小角度吊重

Load Chart - Telescopic Boom, Pick & Carry, Load Over Front

性能表 - 主臂带载行驶（正前方）

Unit: kg

Radius (m) 幅度	10.8	15.6	20.5	22.9	Radius (m) 幅度
3.0	12500	11500			3.0
3.5	11100	10000			3.5
4.0	9900	9000	8800		4.0
4.5	9000	8800	8500	8200	4.5
5.0	8000	8200	8200	8000	5.0
5.5	7200	7600	7800	7500	5.5
6.0	6400	6800	7000	7000	6.0
6.5	5800	6200	6400	6600	6.5
7.0	5300	5700	5900	6100	7.0
7.5	4800	5200	5400	5600	7.5
8.0	4100	4700	4900	5000	8.0
9.0		3800	4000	4100	9.0
10.0		3000	3300	3400	10.0
12.0		2000	2200	2300	12.0
14.0			1500	1600	14.0
16.0			1000	1000	16.0
Telescoping status (%) 伸缩模式					
2nd/3rd/Top boom 二 / 三 / 四节臂	0	20	40	50	2nd/3rd/Top boom 二 / 三 / 四节臂
Rope rate 钢丝绳倍率	4	4	4	4	Rope rate 钢丝绳倍率
Min. angle (°) 最小角度	0	0	0	0	Min. angle (°) 最小角度
Load at min. angle 最小角度吊重	3000	800	600	600	Load at min. angle 最小角度吊重

Load Chart - Telescopic Boom, On Tires Stationary, Load Over Front

性能表 - 轮胎静止吊载（正前方）

Unit: kg

Radius (m) 幅度	10.8	15.6	20.5	22.9	Radius (m) 幅度
3.0	15500	14000			3.0
3.5	13500	12800			3.5
4.0	12000	11500	11500		4.0
4.5	11000	10200	10500	10500	4.5
5.0	10000	9300	9500	9500	5.0
5.5	9000	8500	8700	9000	5.5
6.0	7500	7800	8000	8000	6.0
6.5	6500	7100	7300	7400	6.5
7.0	5700	6200	6500	6600	7.0
7.5	5000	5500	5800	5900	7.5
8.0	4400	4900	5200	5200	8.0
9.0		4000	4200	4200	9.0
10.0		3200	3500	3500	10.0
12.0		2100	2400	2400	12.0
14.0			1600	1700	14.0
16.0			1100	1100	16.0
Telescoping status (%) 伸缩模式					
2nd/3rd/Top boom 二 / 三 / 四节臂	0	20	40	50	2nd/3rd/Top boom 二 / 三 / 四节臂
Rope rate 钢丝绳倍率	4	4	4	4	Rope rate 钢丝绳倍率
Min. angle (°) 最小角度	0	0	25	35	Min. angle (°) 最小角度
Load at min. angle 最小角度吊重	3500	1000	600	600	Load at min. angle 最小角度吊重

Load Chart - Telescopic Boom, On Tires Stationary, 360° Slewing

性能表 - 轮胎静止吊载（360°）

Unit: kg

Radius (m) 幅度	10.8	15.6	20.5	22.9	Radius (m) 幅度
3.0	12000	11000			3.0
3.5	10000	10000			3.5
4.0	8500	9000	9300		4.0
4.5	7400	7700	8000	8100	4.5
5.0	6200	6500	6800	7000	5.0
5.5	5300	5600	5900	6100	5.5
6.0	4500	4700	4900	5100	6.0
6.5	3800	4100	4300	4500	6.5
7.0	3400	3600	3800	3900	7.0
7.5	2800	3200	3400	3500	7.5
8.0	2300	2800	3000	3100	8.0
9.0		2000	2200	2300	9.0
10.0		1500	1600	1700	10.0
12.0		1000	1100	1100	12.0
Telescoping status (%) 伸缩模式					
2nd/3rd/Top boom 二 / 三 / 四节臂	0	20	40	50	2nd/3rd/Top boom 二 / 三 / 四节臂
Rope rate 钢丝绳倍率	4	4	4	4	Rope rate 钢丝绳倍率
Min. angle (°) 最小角度	0	26	46	52	Min. angle (°) 最小角度
Load at min. angle 最小角度吊重	1000	600	600	600	Load at min. angle 最小角度吊重
Max. angle (°) 最大角度	70	75	80	80	Max. angle (°) 最大角度

Remark
1. Capacities are applicable at 725kPa cold tire inflation pressure.
2. Capacities are applicable only with machine on firm level surface.
3. On tire lifting with the jib mounted is not permitted.
4. Axle lockouts must be applied when lifting on tires.
5. Parking brake must be applied when lifting on tires stationary.
6. Driving speed shall be ≤4km/h at pick & carry mode.

1. 冷态轮胎气压需保持 725kPa。
2. 起重机需在平整坚固的地面上作业。
3. 轮胎吊载工况不允许使用副臂吊载。
4. 轮胎吊载工况中，车桥悬挂需锁定。
5. 轮胎静止吊载工况中，需使用驻车制动。
6. 带载行驶工况中，直线行驶速度需小于等于 4km/h。

DELTA AUTO & EQUIPMENT LTD.

LUSAKA

Plot 13582/M Airport Road

COPPERBELT

Brilliance Street Shade #14 ZCCZ,
Chambishi, Kalulushi

MOBILE (ENGLISH)

+260 977 209596

SOLWEZI

LN1001781/1 Mutanda Road, Kimiteto

WEBSITE

www.delta-auto.net

MOBILE (CHINESE)

+260 571 625298

WECHAT **OysterinChicago**

Reminder:

Any change in the technical parameters and configuration due to product modification or upgrade may occur without prior notice.

The machine in the picture may include additional equipment. This brochure is for reference only, and goods in kind shall prevail.

Copyright at SANY. No part of this brochure may be copied or used for any purpose without written approval from SANY.

Original edition: March 2026